SONY

HD COLOR CAMERA

HDC-700
HDC-750

HD CAMERA ADAPTOR

HDCA-750

HDVS

MAINTENANCE MANUAL

Volume 2　1st Edition (Revised 4)

Serial No. 10001 and Higher (HDC-700)

Serial No. 10001 and Higher (HDC-750)

Serial No. 10001 and Higher (HDCA-750)

⚠警告

このマニュアルは，サービス専用です。
お客様が，このマニュアルに記載された設置や保守，点検，修理など行うと感電や火災，人身事故につながることがあります。
危険をさけるため，サービストレーニングを受けた技術者のみご使用ください。

⚠WARNING

This manual is intended for qualified service personnel only.
To reduce the risk of electric shock, fire or injury, do not perform any servicing other than that contained in the operating instructions unless you are qualified to do so. Refer all servicing to qualified service personnel.

⚠WARNUNG

Die Anleitung ist nur für qualifiziertes Fachpersonal bestimmt.
Alle Wartungsarbeiten dürfen nur von qualifiziertem Fachpersonal ausgeführt werden. Um die Gefahr eines elektrischen Schlages, Feuergefahr und Verletzungen zu vermeiden, sind bei Wartungsarbeiten strikt die Angaben in der Anleitung zu befolgen. Andere als die angegeben Wartungsarbeiten dürfen nur von Personen ausgeführt werden, die eine spezielle Befähigung dazu besitzen.

⚠AVERTISSEMENT

Ce manual est destiné uniquement aux personnes compétentes en charge de l’entretien. Afin de réduire les risques de décharge électrique, d’incendie ou de blessure n’effectuer que les réparations indiquées dans le mode d’emploi à moins d’être qualifié pour en effectuer d’autres. Pour toute réparation faire appel à une personne compétente uniquement.

Table of Contents

Manual Structure

Purpose of this manual ..... 4 (E)
Contents ..... 4 (E)

1. Spare Parts

1-1. Notes on Repair Parts ..... 1-1(E)
1-2. Exploded Views 1-2
1-2-1. HDC-700 1-2
Front Block 1-2
CCD Unit 1-3
Power Block 1-4
Left Side Block 1-5
Right Side Block 1-6
Board Block 1 1-7
Board Block 2 1-8
Top Panel 1-9
Connector Panel 1 1-10
Optical Connector 1-11
Connector Panel 2/Power Transformer 1-12
Connector Panel 3 1-13
Rear Panel 1-14
1-2-2. HDC-750 1-15
CCD unit 1-15
Top Panel Block 1-16
Right Panel and Plug-in Boards 1-17
Left Panel and Boards 1-18
Chassis and Shoulder Pad 1-19
Bottom Block 1-20
1-2-3. HDCA-750 1-21
Right/Top Panels and Boards 1-21
Left Side Panel and Boards 1-22
Optical Connector and Function Switchs/Controls 1-23
Power Block and Bottom Chassis 1-24
Rear Panel Block 1-25
Battery Adaptor BKP-L551 1-26
1-2-4. Screws and Washers 1-27
1-3. Electrical Parts List 1-29
1-4. HDC-700 Frame 1-114
1-5. HDC-750 Frame 1-116
1-6. HDCA-750 Frame 1-117
1-7. Supplied Accessories 1-119
1-8. Optional Fixtures 1-119
1-9. Changed Parts 1-120

2. Semiconductor Pin Assignments

3. Block Diagram

Overall Block (HDC-700) 3-2
Overall Block (HDC-750) 3-6
Overall Block (HDCA-750) 3-8
VA-158 Block 3-10
MX-59 Block 3-11
PR-200 Block 3-12
DL-65 Block 3-13
IE-44 Block 3-15
IF-569 Block 3-16
VDA-31 Block 3-19
DU-24 Block 3-19
DAD-19 Block 3-20
AU-203 Block 3-22
DAP-5 Block 3-25
SG-226 Block 3-26

4. Board Layouts

VA-158 Board 4-1
MX-59 Board 4-3
PR-200 Board 4-5
DL-65 Board 4-7
IE-44 Board 4-9
IF-569 Board 4-11
VDA-31 Board 4-13
DAD-19 Board 4-15
AU-203 Board 4-17
DAP-5 Board 4-19
SG-226 Board 4-21
PS-400 Board 4-23
AT-104 Board 4-25
IF-568 Board 4-27
PS-416 Board 4-29
PS-445 Board 4-31
CN-1270 Board 4-33
SW-824 Board 4-35
MB-666 Board 4-37
PS-419 Board 4-39

http://getMANUAL.com

MB-570 Board 4-41
PS-401 Board 4-43
MB-573 Board 4-45

5. Schematic Diagrams

Location of Printed Circuit Boards 5-1
VA-158 Board 5-2
MX-59 Board 5-4
PR-200 Board 5-8
DL-65 Board 5-10
IE-44 Board 5-14
IF-569 Board 5-16
VDA-31 Board 5-20
DU-24 Board 5-20
DAD-19 Board 5-22
AU-203 Board 5-26
DAP-5 Board 5-30
SG-226 Board 5-32
PS-400 Board 5-36
AT-104 Board 5-37
IF-568 Board 5-38
PS-416 Board 5-39
PS-445 Board 5-40
SW-824 Board 5-41
CN-1270 Board 5-42
CN-1280 Board 5-43
CN-1296 Board 5-44
LE-172 Board 5-45
MB-666 Board 5-46
Frame Wiring (HDC-700) 5-48
PS-419 Board 5-51
CN-1034 Board 5-52
SW-688 Board 5-53
SW-806 Board 5-54
MB-570 Board 5-55
Frame Wiring (HDC-750) 5-56
PS-401 Board 5-58
CN-1039 Board 5-59
CN-1282 Board 5-60
SW-690 Board 5-61
MB-573 Board 5-62
Frame Wiring (HDCA-750) 5-64

Manual Structure

Purpose of this manual

This manual is the maintenance manual Volume 2 for Color Video Camera HDC-700/750 and Camera Adaptor HDCA-750.
This manual describes items that premise the service based on the components parts such as schematic diagrams, board layouts and spare parts list, assuming use of system and service engineers.
The maintenance manual Volume 1, which describes the information items necessary when the unit is supplied and installed and items on maintenance, is supplied with the HDC-700/750 and HDCA-750 respectively.

Contents

The following are summaries of the each section for understanding the manual.

Section 1. Spare Parts

Describes parts list, exploded views, supplied accessories and fixtures list used in the unit.

Section 2. Semiconductor Pin Assignments

Describes function diagrams and pin names of semiconductor used in the unit.

Section 3. Block Diagrams

Describes overall block diagram and the block diagrams for every circuit board.

Section 4. Board Layouts

Describes board layouts for every circuit board.

Section 5. Schematic Diagrams

Describes schematic diagrams for every circuit board.

Section 1
Spare Parts

1-1. Notes on Repair Parts

1. Safety Related Components Warning

WARNING

Components marked ⚠ are critical to safe operation. Therefore, specified parts should be used in the case of replacement.

2. Standardization of Parts

Some repair parts supplied by Sony differ from those used for the unit. These are because of parts commonality and improvement.
Parts list has the present standardized repair parts.

3. Stock of Parts

Parts marked with “o” at SP (Supply Code) column of the spare parts list may be not stocked. Therefore, the delivery date will be delayed.

4. Units Representation

The following represented units are changed or omitted in writing.

Units		Representation
Capacitance	μF	uF
Inductance	μH	uH
Resistance	Ω	Abbreviation

1-2. Exploded Views

1-2-1. HDC-700

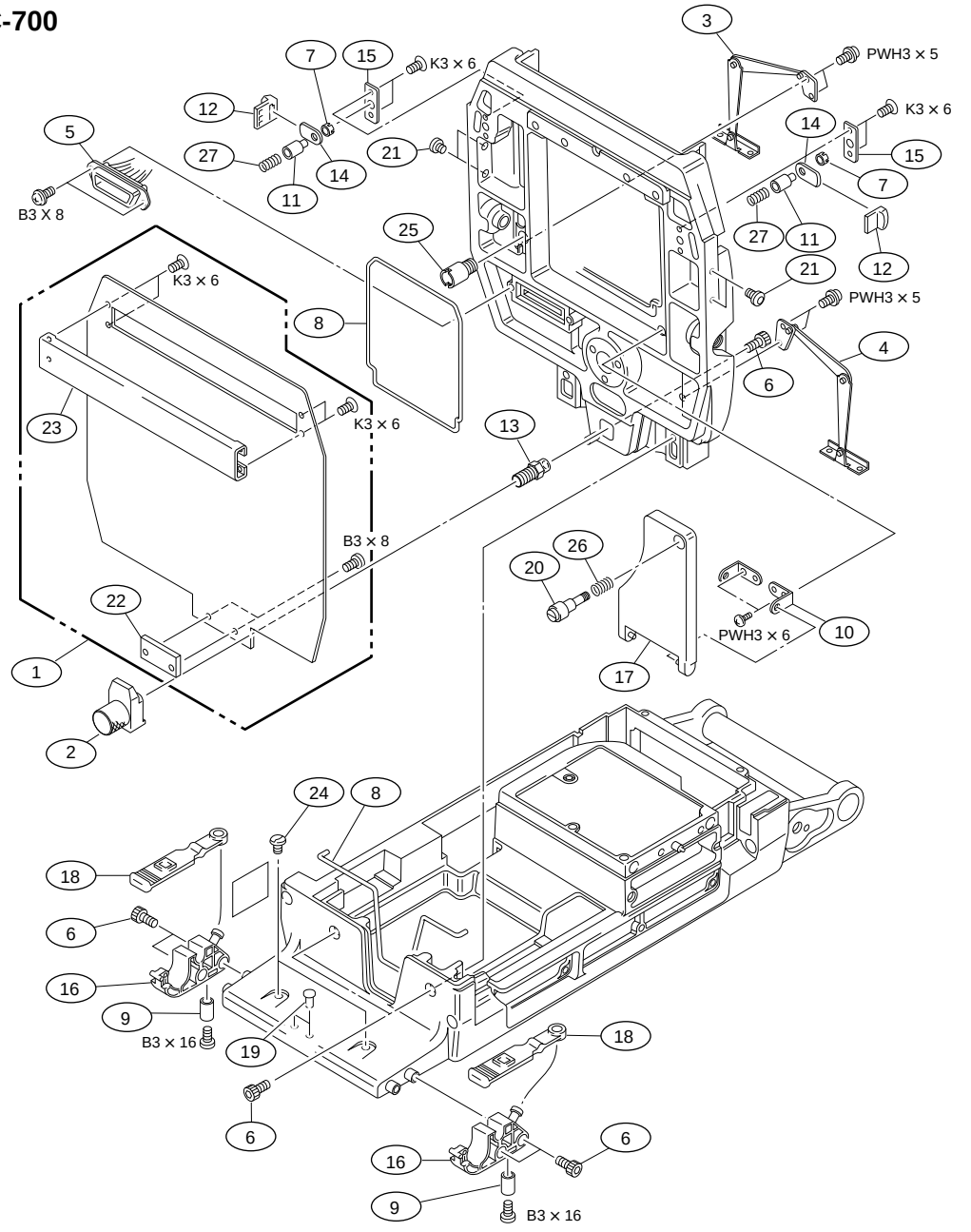

No.	Part No.	SP	Description	
1	A-7612-327-A	o	PLATE, FRONT	*1
	A-8278-526-B	o	PLATE, FRONT (H1)	*2
2	X-3692-305-1	o	RETAINER ASSY, LENS	
3	X-3692-312-3	o	STAY (LEFT) ASSY	
4	X-3692-313-3	o	STAY (RIGHT) ASSY	
5	1-509-892-31	o	CONNECTOR 36P	
6	2-391-520-21	s	BOLT (M5X12), HOLE, HEXAGON	
7	3-185-868-01	o	COVER, EDGE	
8	3-185-869-01	s	SHIELD, SOFT	
9	3-185-902-02	s	FOOT, FRONT	
10	3-185-903-01	o	HINGE, MOUNT LEVER	
11	3-185-905-02	o	SOLENOID	
12	3-185-906-01	o	CAP, LATCH	
13	3-185-912-01	o	SHAFT M10	
14	3-185-913-01	o	PLATE, LATCH	
15	3-185-914-02	o	GUIDE	
16	3-185-934-02	o	CLAMP, CABLE	
17	3-185-943-01	o	LID, MOUNT LEVER FIXED	
18	3-186-502-01	o	BAND, CLAMP	
19	3-545-657-11	s	BUSH	
20	3-657-657-00	s	SCREW (M5)	
21	3-673-018-00	s	SCREW, BLIND	
22	3-692-571-01	o	PAD	
23	3-692-573-01	o	COVER, EDGE	
24	3-725-907-01	s	BUSHING, BLIND	
25	3-740-805-01	o	RETAINER, GUIDE SHAFT	
26	4-866-663-01	s	SPRING, COMPRESSION	
27	4-926-395-01	s	SPRING, COMPRESSION	

*1 :S/N 11001 - 13000
*2 :S/N 10001 - 11000, 13001 -

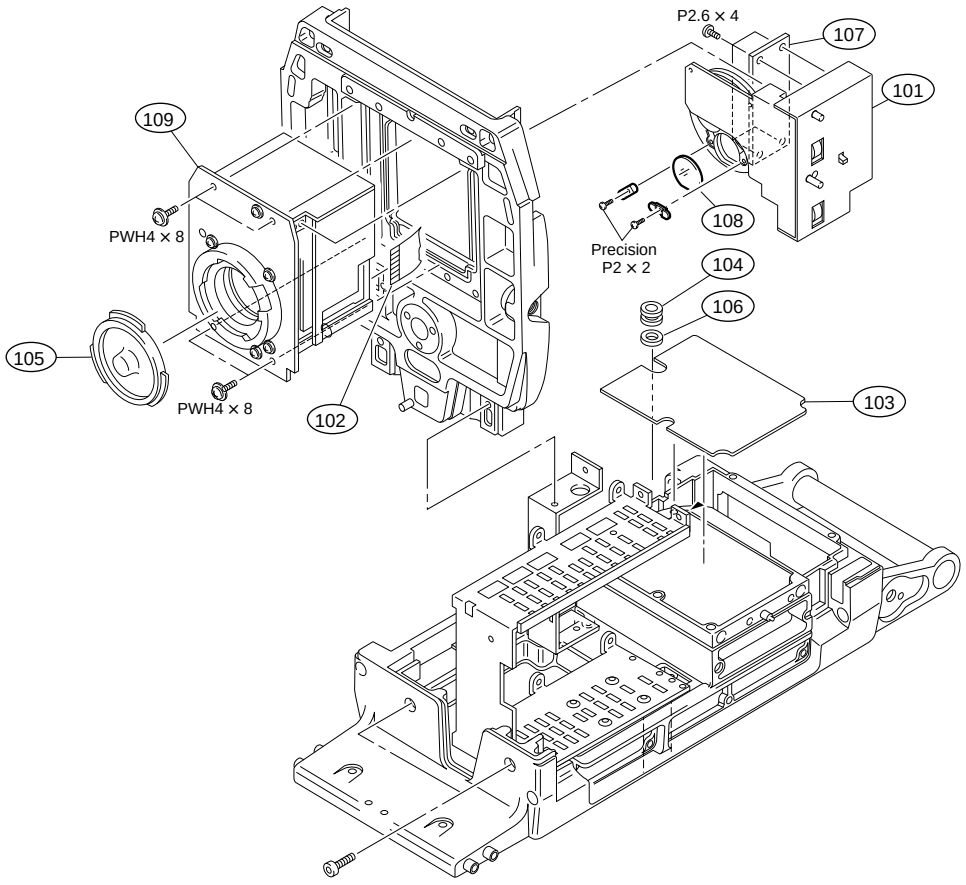

No.	Part No.	SP	Description
101	1-547-944-11	o	DISK UNIT, FILTER
102	1-777-661-11	o	WIRE, FLAT TYPE (28 CORE)
103	3-185-889-01	o	SHEET, RADIATION
104	3-676-125-00	o	PIN, STOPPER
105	3-699-048-01	s	CAP, MOUNT
106	3-701-444-01	o	WASHER, 6
107	9-939-194-01	o	MOUNTED CIRCUIT BOARD, SERVO DRIVER

No.	Part No.	SP	Description
108	9-939-640-01	o	FILTER (CLEAR) *1
	9-939-641-01	o	FILTER,ND 2 (1/4ND) *1
	9-939-642-01	o	FILTER,ND 3 (1/8ND) *1
	9-939-643-01	o	FILTER,ND 4 (1/16ND)*1
	9-939-644-01	o	FILTER,ND 5 (1/64ND)*1
	9-939-645-01	o	FILTER,CC A (CROSS) *1
	9-939-647-01	o	FILTER,CC C (4300K) *1
	9-939-648-01	o	FILTER,CC D (6300K) *1
	9-939-649-01	o	FILTER,CC E (8000K) *1
109	CCD Unit : HKC-C700		

*1 See HDC-700 Maintenance manual Volume1, Section 2-6, for details.

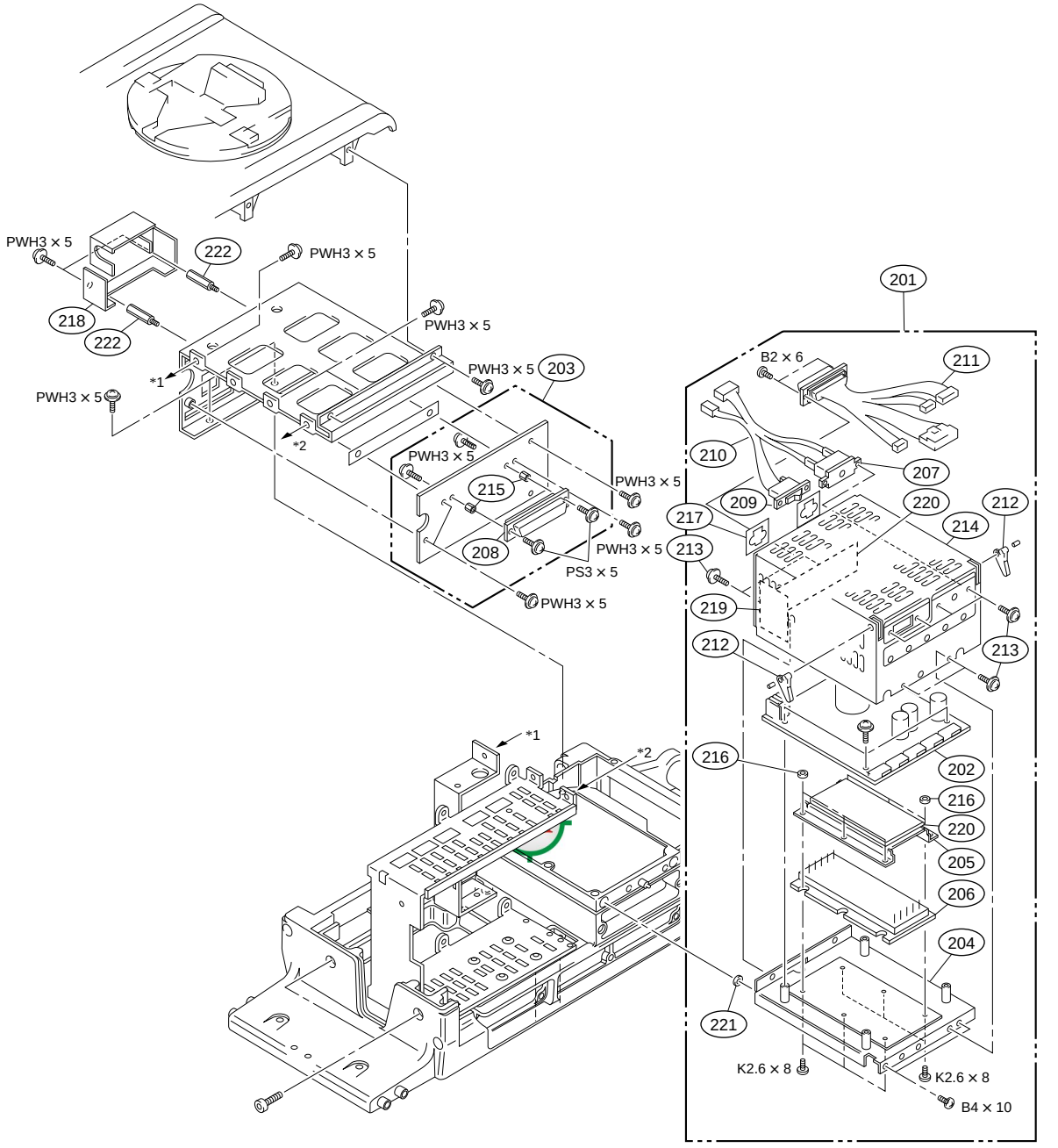

No.	Part No.	SP	Description
201	⚠ A-8273-170-A	s	POWER ASSY
202	A-8273-173-A	o	MOUNTED CIRCUIT BOARD,PS-416
203	A-8273-186-A	o	MOUNTED CIRCUIT BOARD,CN-1270
204	X-3167-566-1	o	BOX ASSY, PS
205	X-3167-567-1	o	PLATE, SHIELD ASSY, DD
206	⚠ 1-466-411-21	s	CONVERTER UNIT, DC-DC
207	⚠ 1-533-516-61	s	BREAKER, CIRCUIT
208	1-563-893-11	s	SOCKET, D-SUB CONNECTOR 50P
209	⚠ 1-762-116-11	s	SWITCH, AC POWER
210	⚠ 1-953-630-11	o	HARNESS (PS-SW)
211	1-955-796-11	o	HARNESS (PS-CONNECT)
212	2-251-622-01	s	LEVER, PC BOARD
213	3-178-214-01	s	SCREW (M3X6), +B
214	3-185-950-01	o	LID, PS BOX
215	3-185-960-01	o	HEXAGON SUPPORT M3X7
216	3-185-962-01	o	NUT, INSULATED
217	3-190-309-01	s	SHEET, SLIDE
218	3-603-882-01	o	COVER,PROTECTION
219	3-697-456-01	o	INSULATING SHEET(2),PS
220	3-697-457-01	o	INSULATING SHEET(3),PS
221	3-701-440-21	s	WASHER, 3.5
222	3-735-159-01	o	SUPPORT (2)

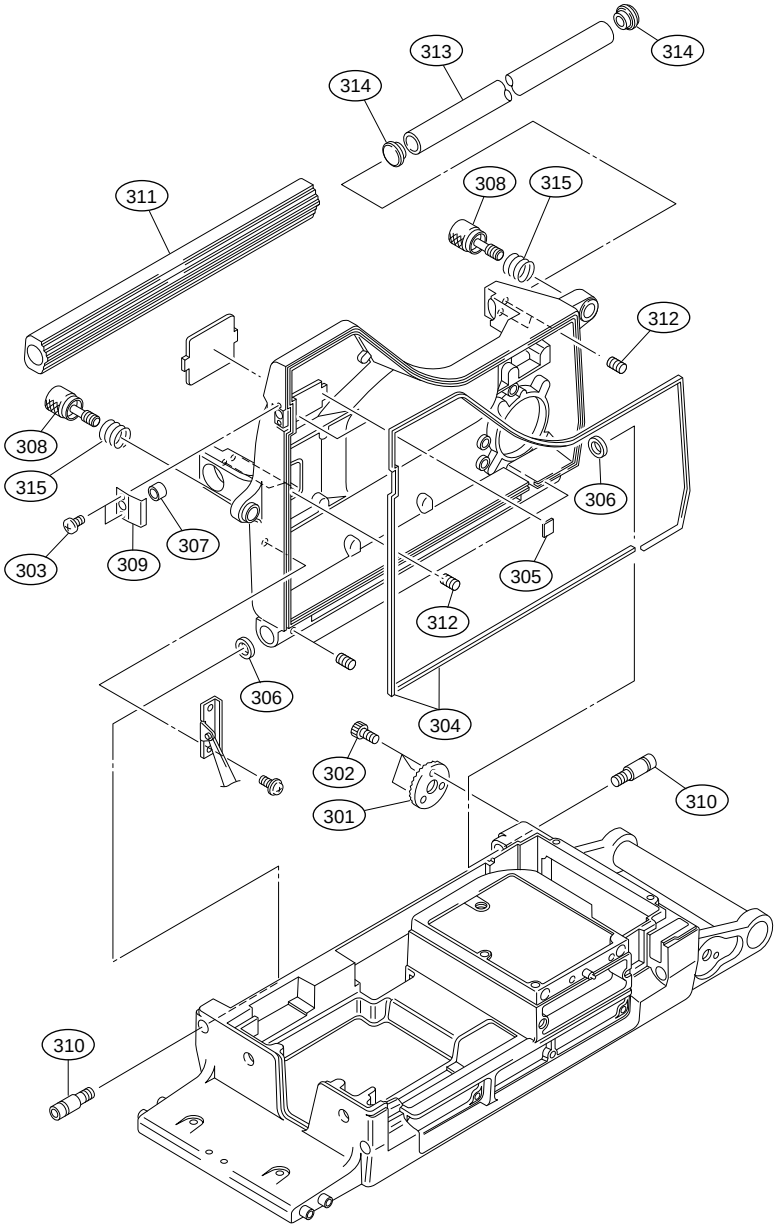

No.	Part No.	SP	Description
301	2-280-511-12	o	BRACKET, ADJUSTMENT, ANGLE
302	2-623-773-11	s	BOLT (M3X8), STAINLESS
303	3-165-162-01	s	SCREW (+P2.6X5) (TYPE1)
304	3-185-869-01	s	SHIELD, SOFT
305	3-185-871-01	o	TAPE, DROP PROTECTION SHIELD
306	3-185-878-01	s	WASHER
307	3-185-879-01	o	BOSS
308	3-185-887-01	o	SCREW, KNOB
309	3-185-888-01	o	PLATE, PROTECTION
310	3-185-890-01	s	BOLT, SHOULDER
311	3-185-942-01	o	HANDLE COVER (A)
312	3-701-510-00	s	SET SCREW, DOUBLE POINT 4X4
313	3-740-815-31	o	PIPE, HANDLE
314	3-740-817-11	o	ESCUTCHEON, PIPE
315	4-367-209-00	s	SPRING, COMPRESSION

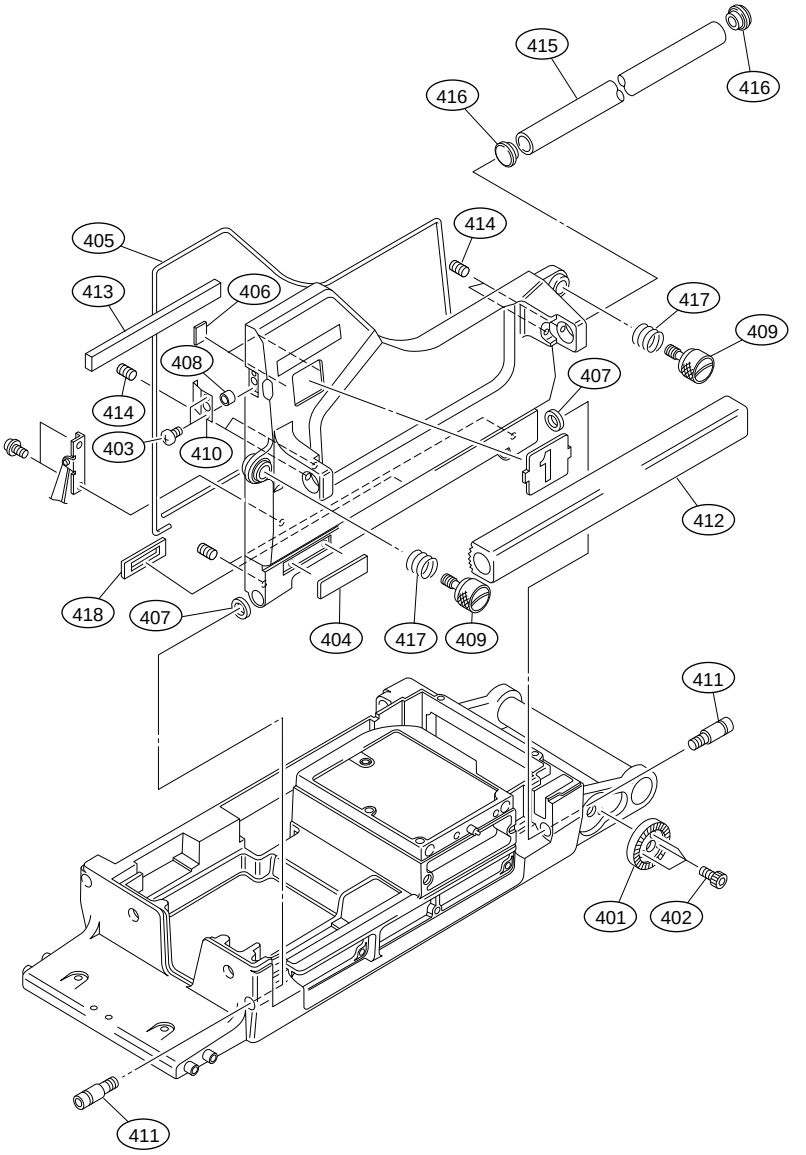

No.	Part No.	SP	Description
401	2-280-511-12	o	BRACKET, ADJUSTMENT, ANGLE
402	2-623-773-11	s	BOLT (M3X8), STAINLESS
403	3-165-162-01	s	SCREW (+P2.6X5) (TYPE1)
404	3-176-138-01	o	EMBLEM, HYPER HAD
405	3-185-869-01	s	SHIELD, SOFT
406	3-185-871-01	o	TAPE, DROP PROTECTION SHIELD
407	3-185-878-01	s	WASHER
408	3-185-879-01	o	BOSS
409	3-185-887-01	o	SCREW, KNOB
410	3-185-888-01	o	PLATE, PROTECTION

No.	Part No.	SP	Description
411	3-185-890-01	s	BOLT, SHOULDER
412	3-185-942-01	o	HANDLE COVER (A)
413	3-693-196-01	o	CUSHION,RETAINER,PCB
414	3-701-510-00	s	SET SCREW, DOUBLE POINT 4X4
415	3-740-815-31	o	PIPE, HANDLE
416	3-740-817-01	o	ESCUTCHEON, PIPE
417	4-367-209-00	s	SPRING, COMPRESSION
418	3-608-803-01	o	RUBBER, DROP PROTECTRION *1

*1 :S/N 10053-

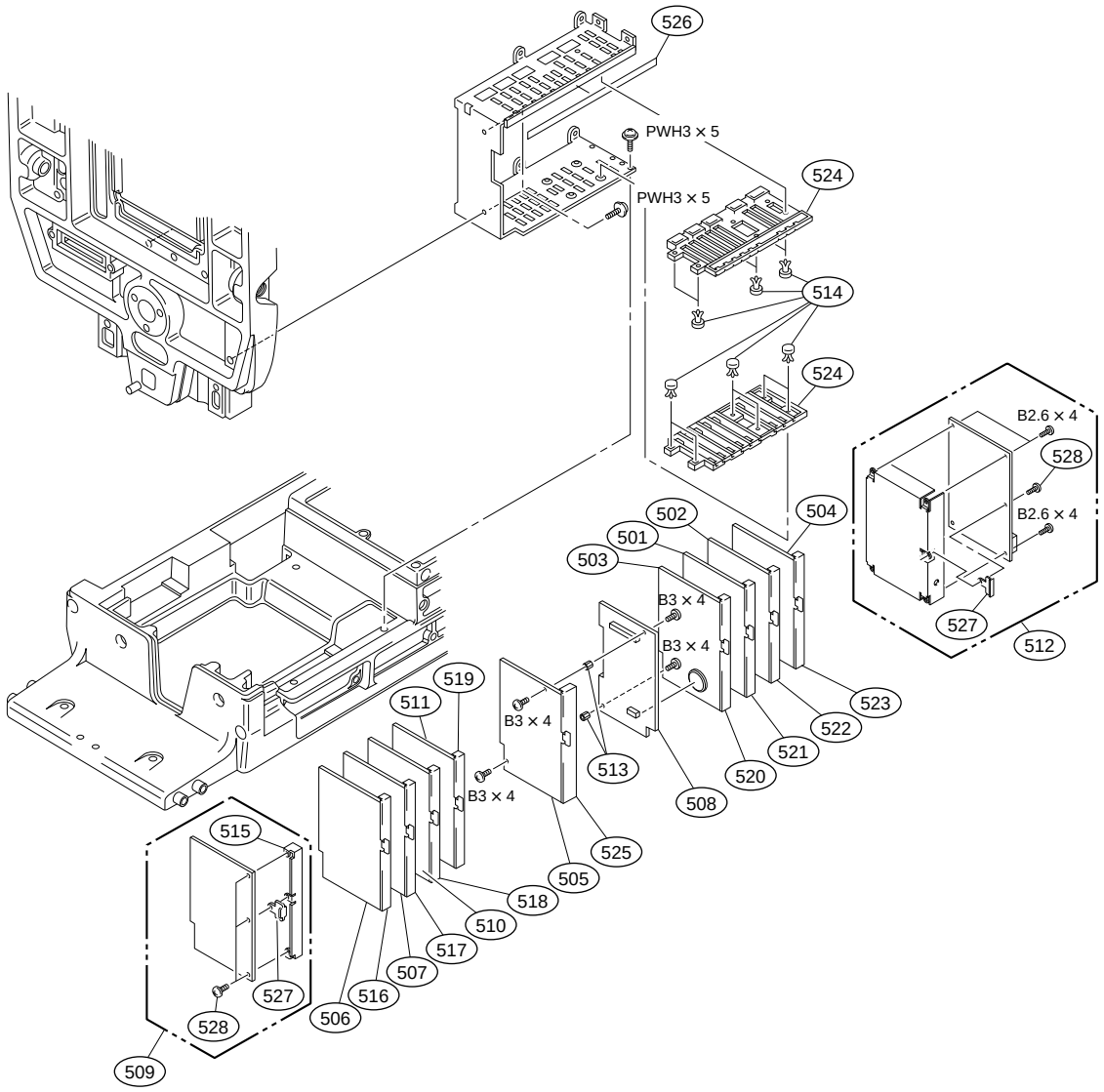

No.	Part No.	SP	Description
501	A-8273-132-A	o	MOUNTED CIRCUIT BOARD,AU-203
502	A-8273-135-A	o	MOUNTED CIRCUIT BOARD,DAP-5
503	A-8273-138-A	o	MOUNTED CIRCUIT BOARD,VDA-31
504	A-8273-139-A	o	MOUNTED CIRCUIT BOARD,SG-226
505	A-8273-182-A	o	MOUNTED CIRCUIT BOARD,CN-1296
506	A-8273-212-A	o	MOUNTED CIRCUIT BOARD,MX-59
507	A-8273-213-A	o	MOUNTED CIRCUIT BOARD,PR-200
508	A-8273-214-A	o	MOUNTED CIRCUIT BOARD,IF-569
509	A-8273-215-A	o	MOUNTED CIRCUIT BOARD,VA-158
510	A-8273-223-A	o	MOUNTED CIRCUIT BOARD,DL-65
511	A-8273-224-A	o	MOUNTED CIRCUIT BOARD,IE-44
512	A-8277-038-A	o	MOUNTED CIRCUIT BOARD,PS-400
513	2-280-622-11	o	SUPPORT (M3), HEXAGON
514	3-531-576-21	s	RIVET
515	3-602-406-01	o	PANEL,VA-158 PC BOARD

No.	Part No.	SP	Description	
516	3-602-407-01	o	PANEL,MX-59 PC BOARD	
517	3-602-408-01	o	PANEL,PR-200 PC BOARD	
518	3-602-409-01	o	PANEL,DL-65 PC BOARD	
519	3-602-410-01	o	PANEL,IE-44 PC BOARD	
520	3-602-438-01	o	PANEL,VDA-31 PC BOARD	
521	3-602-439-03	o	PANEL,AU-203 PC BOARD	*2
	3-602-439-01	o	PANEL,AU-203 PC BOARD	*1
522	3-602-440-01	o	PANEL,DAP-5 PC BOARD	
523	3-602-441-02	o	PANEL,SG-226 PC BOARD	
524	3-602-476-02	o	RAIL,PC BOARD	
525	3-602-478-01	o	PANEL,IF PC BOARD	
526	3-602-972-01	o	SHEET,NAME	
527	3-724-753-01	o	RING	
528	3-729-061-01	s	SCREW (M2X4.5) (TYPE 1)	

*1 :S/N 10001-10077
*2 :S/N 10078-

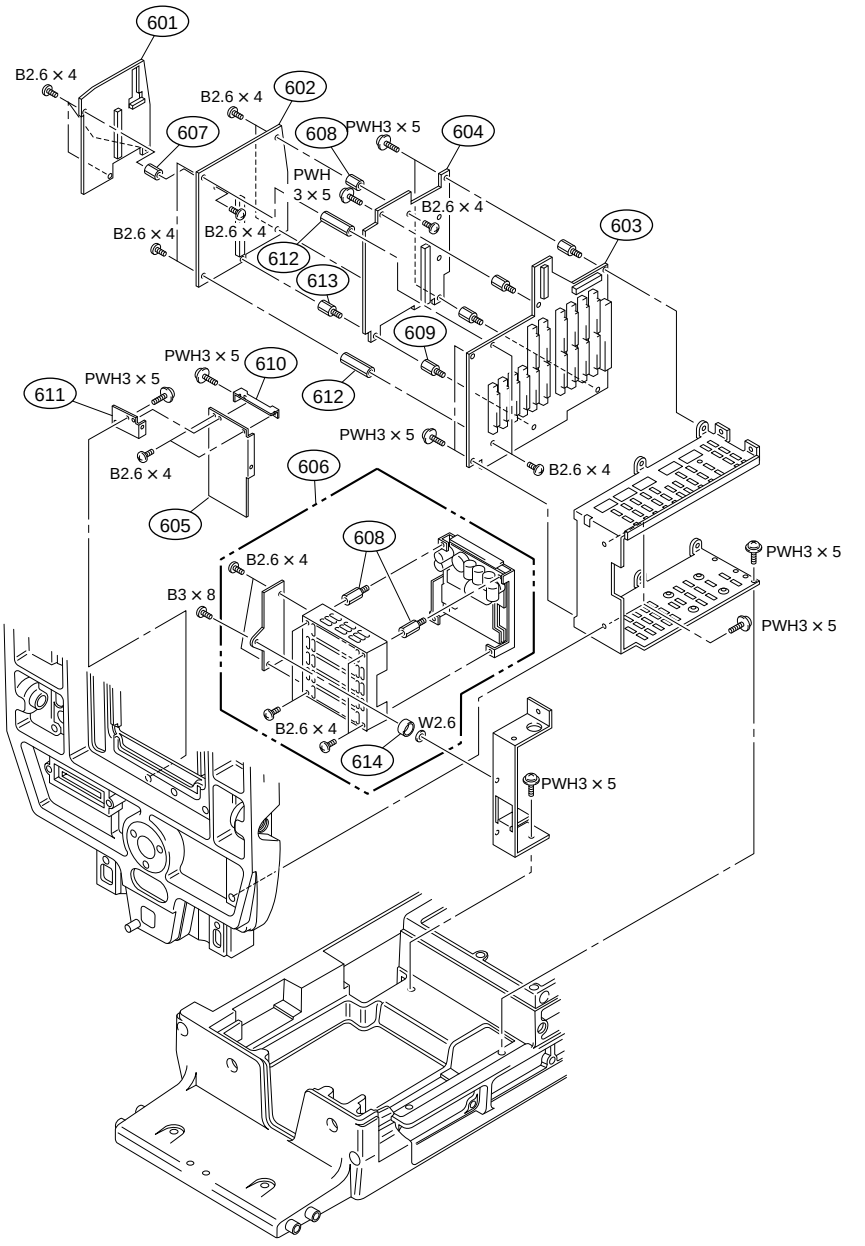

No.		Part No.	SP	Description
601	⚠	A-8273-134-A	o	MOUNTED CIRCUIT BOARD, SDI-10
602		A-8273-137-A	o	MOUNTED CIRCUIT BOARD, DAD-19
603		A-8273-180-A	o	MOUNTED CIRCUIT BOARD, MB-666
604		A-8273-184-A	o	MOUNTED CIRCUIT BOARD, CN-1280
605		A-8273-188-A	o	MOUNTED CIRCUIT BOARD, IF-568
606		A-8273-196-A	s	MOUNTED CIRCUIT BOARD, PS-445
607		2-130-288-01	o	SUPPORT
608		3-602-434-02	o	SUPPORT,PC BOARD
609		3-602-435-02	o	SUPPORT,PC BOARD(A)
610		3-603-401-01	o	BRACKET(1), IF
611		3-603-402-01	o	BRACKET(2), IF
612		3-686-054-02	o	STUD, SUPPORT, PC BOARD
613		3-711-228-01	o	STANDOFF, D SUB CONN.
614		3-716-370-11	o	SPACER

http://getMANUAL.com

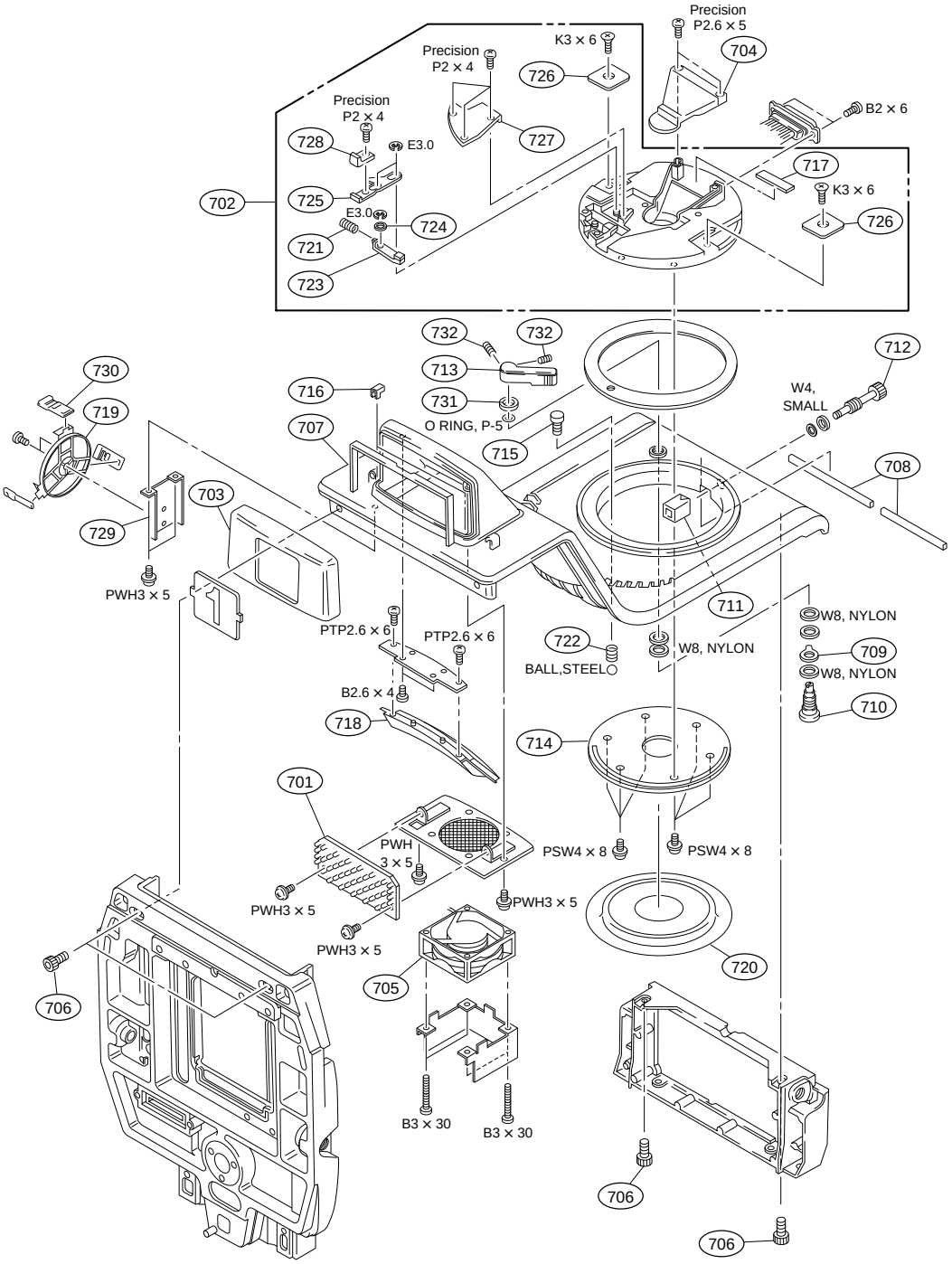

No.	Part No.	SP	Description
701	A-8273-190-A	o	MOUNTED CIRCUIT BOARD, LE-172
702	A-8314-047-A	o	PANNING ASSY
703	X-3167-561-1	s	COVER ASSY, TARY
704	X-3167-699-2	o	GUARD ASSY, HARNESS
705	1-698-977-11	s	FAN
706	2-391-520-21	s	BOLT (M5X12), HOLE, HEXAGON
707	3-185-866-02	o	CUSHION, DROP PROTECTION
708	3-185-869-01	s	SHIELD, SOFT
709	3-185-881-01	o	PLATE, LOCK PAN
710	3-185-882-02	o	LOCK, PAN
711	3-185-884-01	o	FRICTION
712	3-185-885-01	o	SCREW, PAN FRICTION
713	3-185-886-02	o	LEVER, PAN LOCK
714	3-185-933-03	o	RING, PAN BASE
715	3-186-806-01	s	SCREW, LID
716	3-187-630-01	o	CUSHION,(SMALL)DROP PROTECTION
717	3-187-655-01	o	CUSHION, D SUB
718	3-603-281-01	o	DUCT
719	3-603-400-01	o	REEL
720	3-603-813-02	o	COVER,CABLE
721	3-634-355-00	s	SPRING
722	3-641-622-00	s	SPRING, COMPRESSION
723	3-692-327-03	o	PIN (JOINT)
724	3-692-328-01	o	SPACER (JOINT)
725	3-692-329-02	o	LEVER (A) (JOINT)
726	3-692-332-01	o	PLATE (A)
727	3-692-365-02	o	PLATE, BLIND
728	3-692-370-01	o	COVER, LEVER (A)
729	3-697-898-01	o	REEL BRACKET

HDC-700 : S/N 10001 through 11000

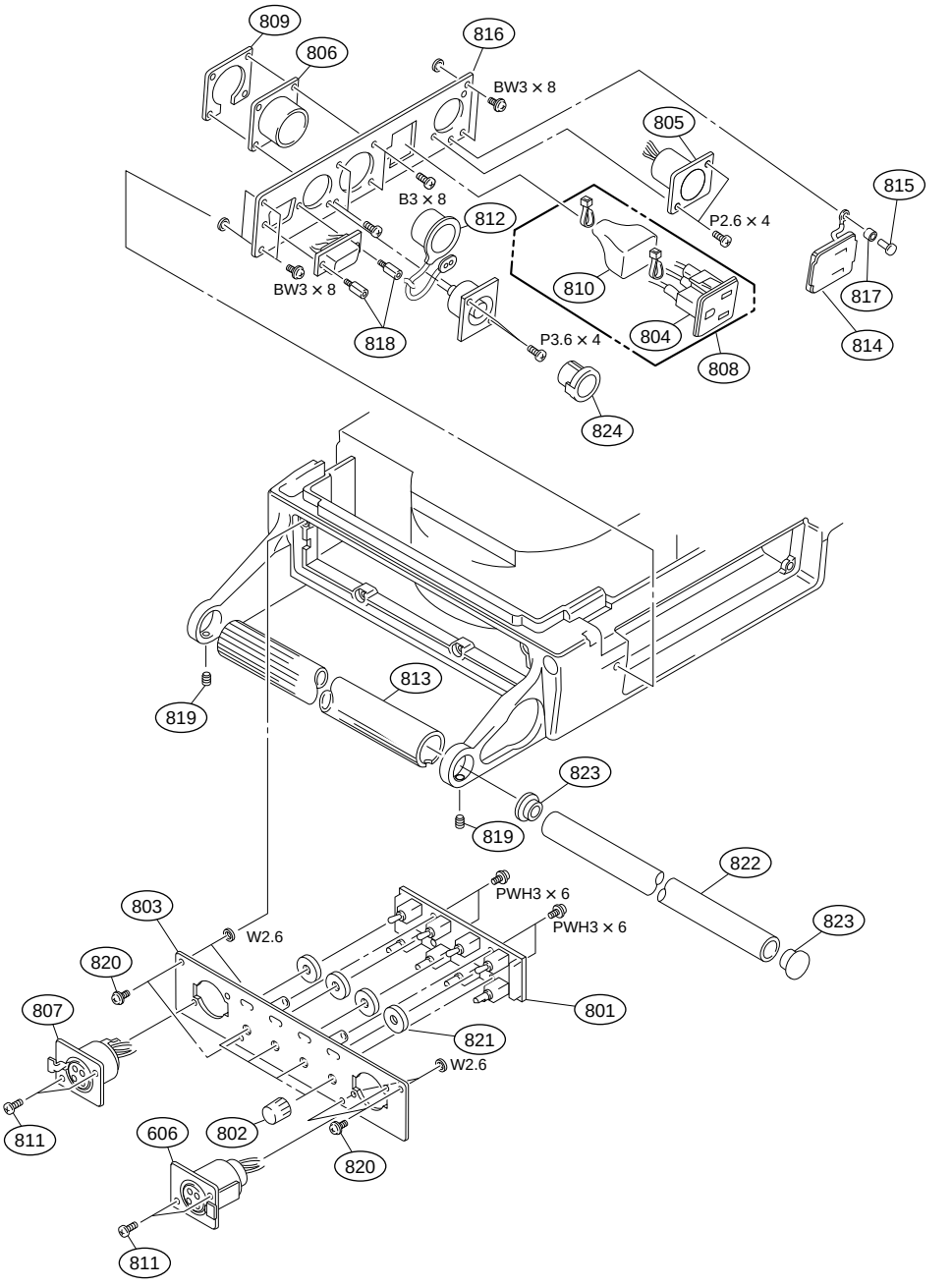

No.	Part No.	SP	Description
801	A-8314-068-A	o	MOUNTED CIRCUIT BOARD, SW-706
802	X-3167-563-1	s	VOLUME KNOB DIA.3 ASSY
803	X-3167-568-1	o	PANEL (N) ASSY, INTERCOM
804	⚠ 1-251-220-11	s	OUTLET, AC
805	1-509-177-31	s	CONNECTOR 4P MALE “DC IN”
806	1-562-244-00	o	CONNECTOR 26P MALE “VTR”
807	1-563-159-11	s	CONNECTOR 5P FEMALE “INCOM”
808	1-953-632-11	o	HARNESS (UTL(NTSC))
809	2-090-229-01	s	NUT, PLATE
810	2-254-842-02	s	COVER, SWITCH INSULATING
811	3-165-162-01	s	SCREW (+P2.6X5) (TYPE1)
812	3-166-346-01	s	CAP (CCZ), DROP PROTECTION
813	3-185-901-02	o	COVER, (B) HANDLE
814	3-186-500-01	o	LID (N), OUTLET
815	3-531-576-21	s	RIVET
816	3-602-967-01	o	PANEL(N),STAND ALONE
817	3-654-058-11	o	SPACER (3X2)
818	3-673-910-00	o	SCREW, CONNECTOR
819	3-701-510-00	s	SET SCREW, DOUBLE POINT 4X4
820	3-719-159-01	s	SCREW (M3), (+ BW)
821	3-729-007-01	o	PLATE, ORNAMENTAL, TOGGLE SW
822	3-740-815-01	o	PIPE, HANDLE
823	3-740-817-01	o	ESCUTCHEON, PIPE
824	3-741-726-01	o	CAP (2), XLR

HDC-700 : S/N 11001 and higher

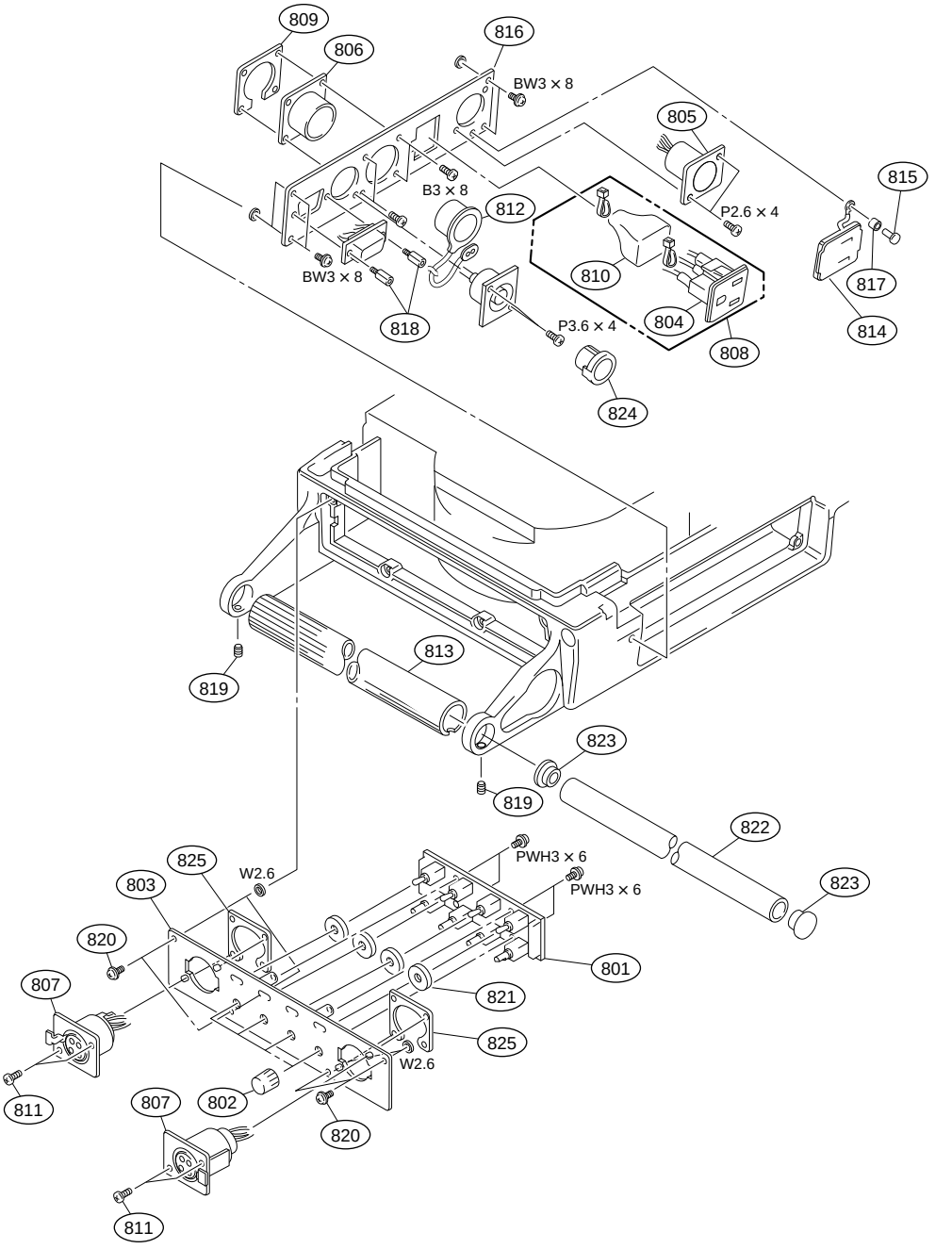

No.	Part No.	SP	Description
801	A-8314-068-A	o	MOUNTED CIRCUIT BOARD, SW-706
802	X-3167-563-1	s	VOLUME KNOB DIA.3 ASSY
803	X-3604-618-1	o	PANEL (N) ASSY, INTERCOM
804 ⚠	1-251-220-11	s	OUTLET, AC
805	1-509-177-31	s	CONNECTOR 4P MALE "DC IN"
806	1-562-244-00	o	CONNECTOR 26P MALE "VTR"
807	A-8318-753-A	s	MOUNTED CIRCUIT BOARD, CN-1702 "INCOM"
808	1-953-632-11	o	HARNESS (UTL(NTSC))
809	2-090-229-01	s	NUT, PLATE
810	2-254-842-02	s	COVER, SWITCH INSULATING
811	3-165-162-01	s	SCREW (+P2.6X5) (TYPE1)
812	3-166-346-01	s	CAP (CCZ), DROP PROTECTION
813	3-185-901-02	o	COVER, (B) HANDLE
814	3-186-500-01	o	LID (N), OUTLET
815	3-531-576-21	s	RIVET
816	3-602-967-01	o	PANEL(N),STAND ALONE
817	3-654-058-11	o	SPACER (3X2)
818	3-673-910-00	o	SCREW, CONNECTOR
819	3-701-510-00	s	SET SCREW, DOUBLE POINT 4X4
820	3-719-159-01	s	SCREW (M3), (+ BW)
821	3-729-007-01	o	PLATE, ORNAMENTAL, TOGGLE SW
822	3-740-815-01	o	PIPE, HANDLE
823	3-740-817-01	o	ESCUTCHEON, PIPE
824	3-741-726-01	o	CAP (2), XLR
825	3-613-921-01	o	NUT

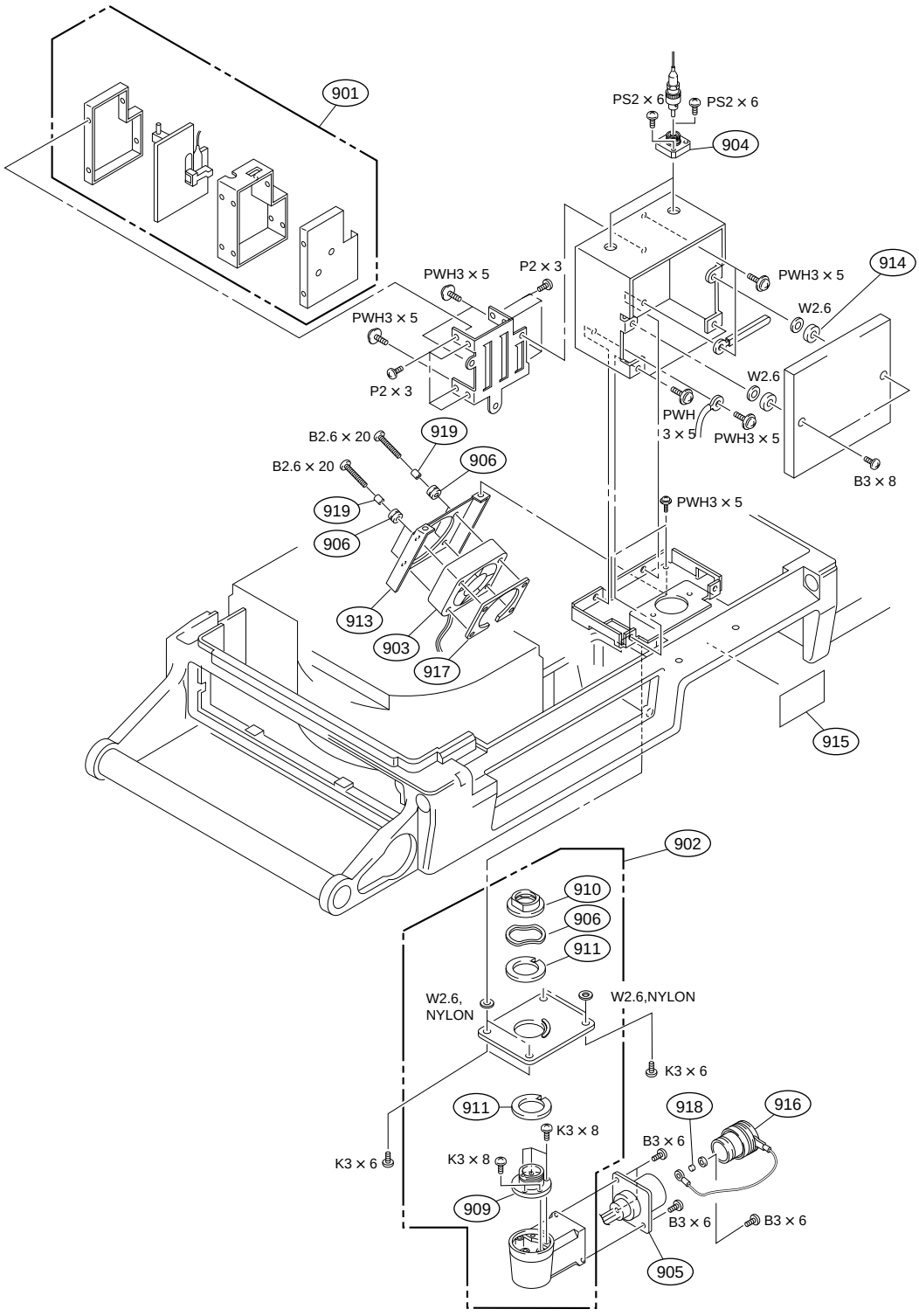

No.	Part No.	SP	Description
901	A-8273-133-A	o	MOUNTED CIRCUIT BOARD,RX-28
902	A-8273-198-B	o	CONNECTOR ASSY, OPT
903	1-698-775-21	s	FAN, DC
904	1-774-996-11	o	CONNECTOR, OPTICAL (FC TYPE)
905	1-777-205-22	s	CABLE ASSEMBLY, ENCAPSULATED (M)
906	3-175-712-01	o	BUSHING, RUBBER
907	3-176-525-01	o	WASHER, SPRING
908	3-602-404-01	o	HOUSING, CONECTOR
909	3-602-460-03	o	SHAFT, CONECTOR
910	3-602-461-01	o	NUT, CONECTOR
911	3-602-464-01	o	WASHER, CONDUCTIVE
912	3-602-491-01	o	PLATE,FIBER
913	3-602-971-01	o	BRACKET,FAN
914	3-716-370-11	o	SPACER
915	4-627-223-01	o	LABEL, LASER CLASS 1
916	9-880-331-01	s	CAP, CONNECTOR
917	3-175-713-01	o	NUT (M2.6), PLATE
918	3-654-058-21	o	SPACER (3X2.5) *1
919	3-661-806-01	o	SPACER (2.6X4) *1

*1 :S/N 10053-

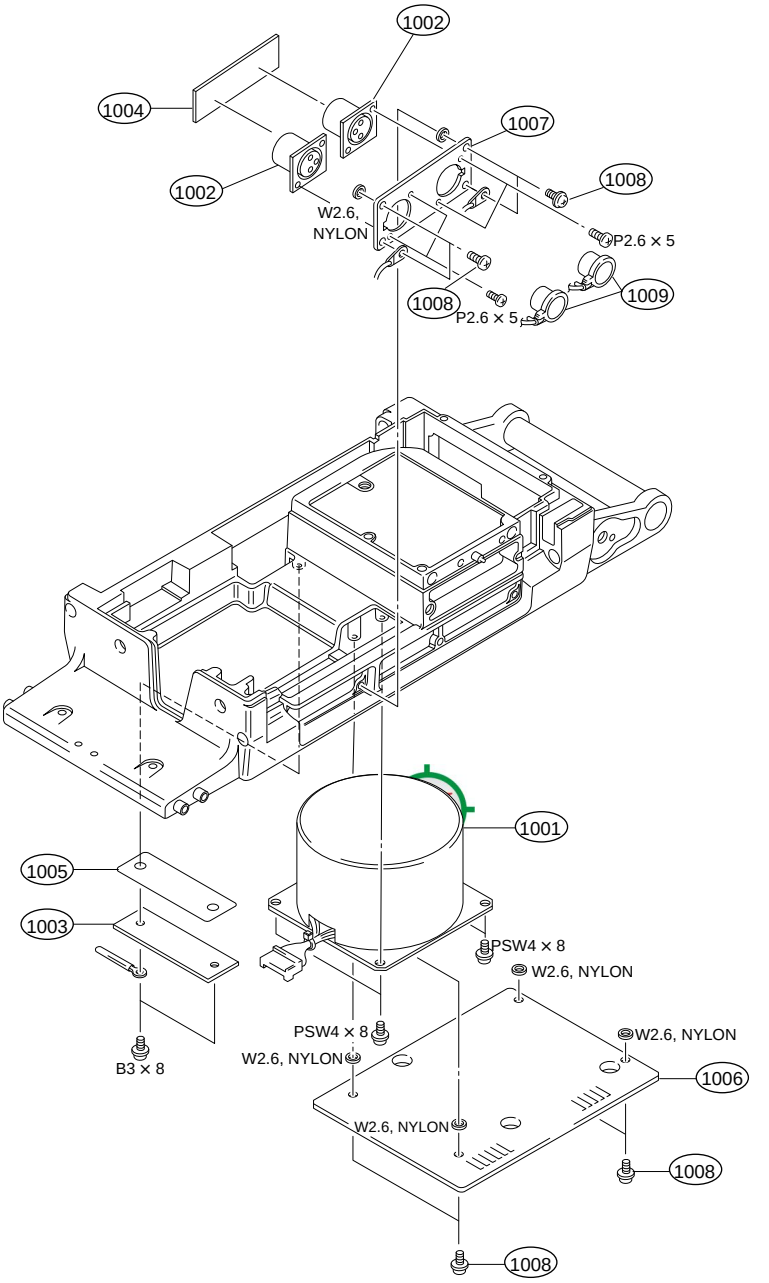

No.	Part No.	SP	Description
1001 ⚠	1-426-993-13	s	TRANSFORMER, POWER
1002	1-573-593-11	s	CONNECTOR 3P MALE "MIC"
1003	1-653-467-11	o	PRINTED CIRCUIT BOARD, CN-986
1004	1-658-609-11	o	PRINTED CIRCUIT BOARD, CN-1239
1005	3-185-897-01	o	SHEET, INSULATING, CN PC BOARD
1006	3-185-929-02	o	PLATE, TRANSFORMER
1007	3-692-798-01	o	PANEL,MIC
1008	3-719-159-01	s	SCREW (M3), (+ BW)
1009	3-741-726-01	o	CAP (2), XLR

HDC-700 : S/N 11001 and higher

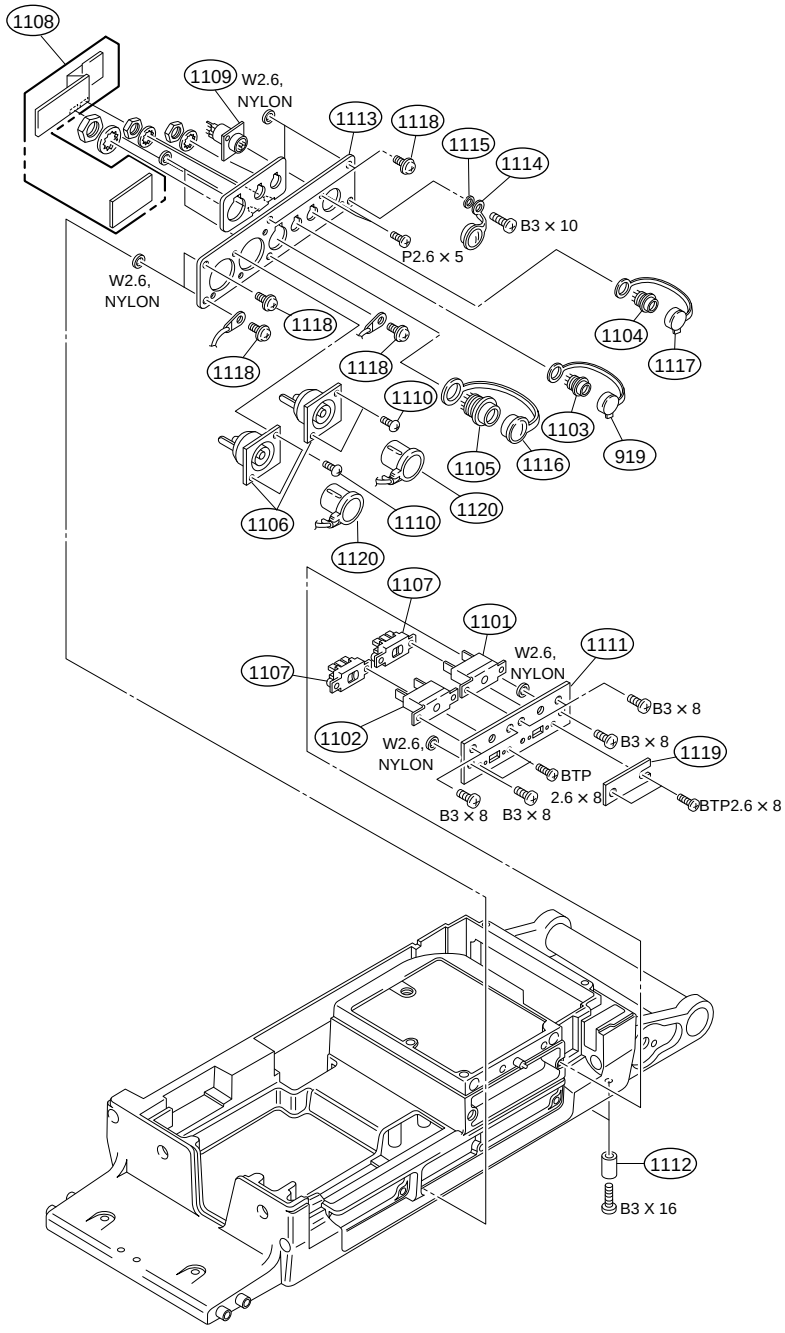

No.	Part No.	SP	Description
1101 ⚠	1-533-514-31	s	BREAKER, CIRCUIT
1102 ⚠	1-533-515-31	s	BREAKER, CIRCUIT
1103	1-562-222-21	s	CONNECTOR 6P FEMALE “RET CONTROL”
1104	1-563-929-11	s	CONNECTOR 4P FEMALE “SCRIPT”
1105	1-565-443-11	o	CONNECTOR 10P FEMALE “TRACKER”
1106	1-569-253-21	s	CONNECTOR, BNC “MONITOR” “PROMPTER”
1107 ⚠	1-570-173-11	s	SELECTOR, POWER VOLTAGE
1108	1-715-050-12	o	PRINTED CIRCUIT BOARD,CONBINED CN-1689/1690/1691
1109	1-766-696-11	o	CONNECTOR 8P FEMALE “REMOTE”
1110	3-165-162-01	s	SCREW (+P2.6X5) (TYPE1)
1111	3-185-895-01	o	BRACKET, BREAKER
1112	3-185-902-02	s	FOOT, FRONT
1113	3-612-404-02	o	CONNECTOR, PANEL (R)
1114	3-186-499-01	o	CONNECTOR, CAP
1115	3-654-058-11	o	SPACER (3X2)
1116	3-678-769-00	s	CAP
1117	3-685-115-11	s	CAP (6P), DROP PROTECTION
1118	3-719-159-01	s	SCREW (M3), (+ BW)
1119	3-740-891-01	o	COVER, INDICATION PLATE
1120	3-741-726-01	o	CAP (2), XLR

HDC-700 : S/N 10001 through 11000

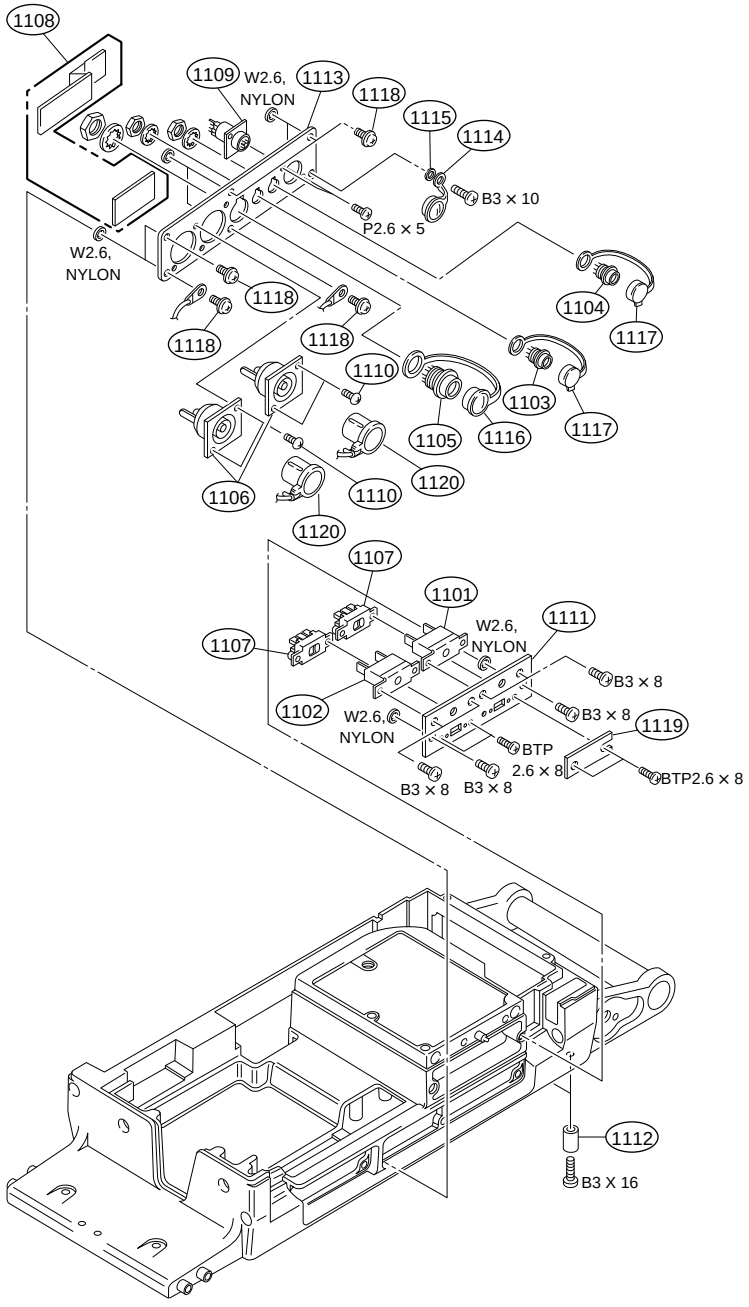

No.	Part No.	SP	Description
1101 ⚠	1-533-514-31	s	BREAKER, CIRCUIT
1102 ⚠	1-533-515-31	s	BREAKER, CIRCUIT
1103	1-562-222-21	s	CONNECTOR 6P FEMALE “RET CONTROL”
1104	1-563-929-11	s	CONNECTOR 4P FEMALE “SCRIPT”
1105	1-565-443-11	o	CONNECTOR 10P FEMALE “TRACKER”
1106	1-569-253-21	s	CONNECTOR, BNC “MONITOR” “PROMPTER”
1107 ⚠	1-570-173-11	s	SELECTOR, POWER VOLTAGE
1108	1-709-123-11	o	PRINTED CIRCUIT BOARD,CONBINED CN-988/989/990
1109	1-766-696-11	o	CONNECTOR 8P FEMALE “REMOTE”
1110	3-165-162-01	s	SCREW (+P2.6X5) (TYPE1)
1111	3-185-895-01	o	BRACKET, BREAKER
1112	3-185-902-02	s	FOOT, FRONT
1113	3-185-936-02	o	CONNECTOR, PANEL (R)
1114	3-186-499-01	o	CONNECTOR, CAP
1115	3-654-058-11	o	SPACER (3X2)
1116	3-678-769-00	s	CAP
1117	3-685-115-11	s	CAP (6P), DROP PROTECTION
1118	3-719-159-01	s	SCREW (M3), (+ BW)
1119	3-740-891-01	o	COVER, INDICATION PLATE
1120	3-741-726-01	o	CAP (2), XLR

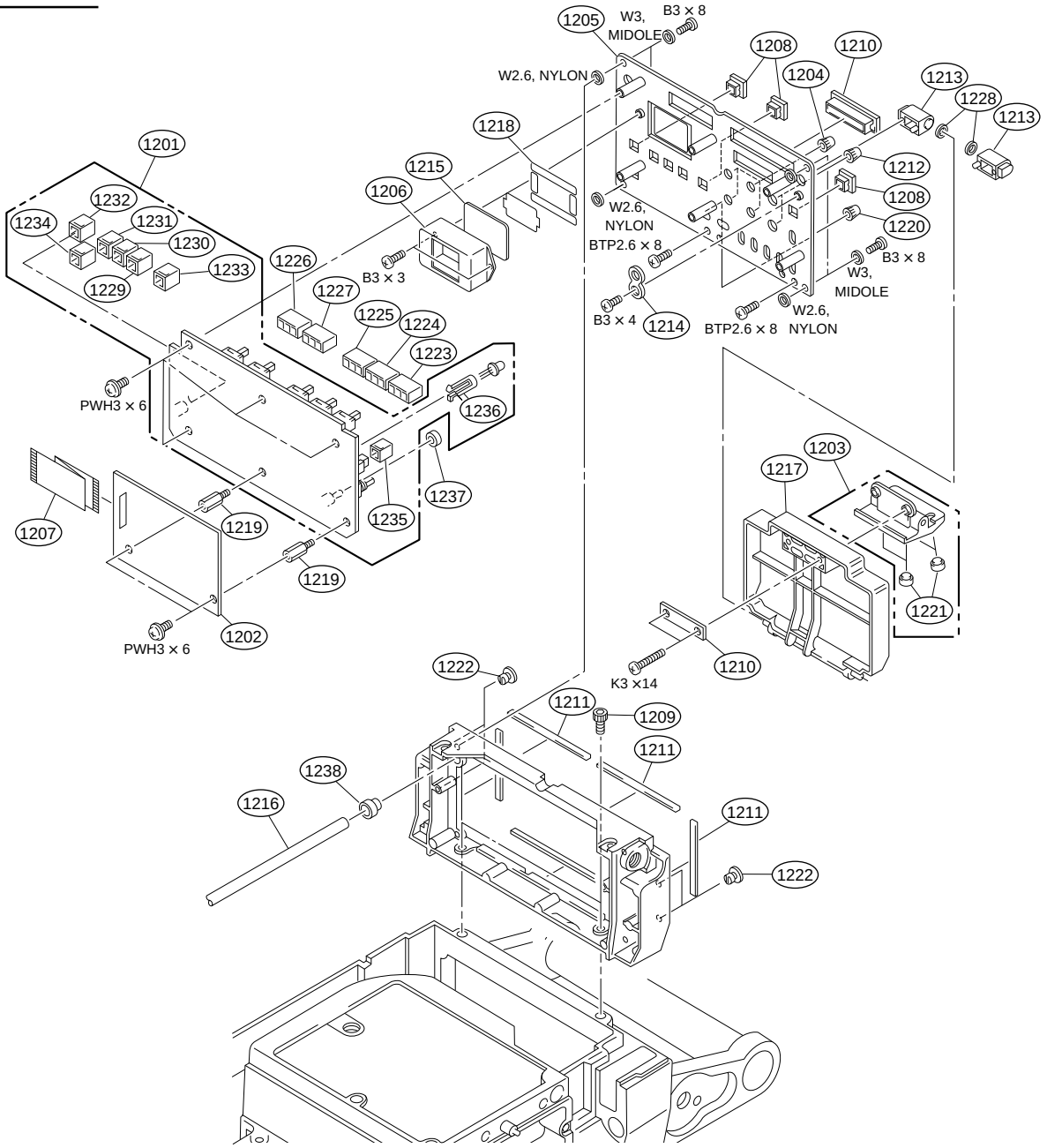

No.	Part No.	SP	Description
1201	A-8273-174-A	o	MOUNTED CIRCUIT BOARD,SW-824
1202	A-8273-175-A	o	MOUNTED CIRCUIT BOARD,AT-104
1203	X-3167-562-1	o	PAPER ASSY
1204	X-3167-563-1	s	VOLUME KNOB DIA.3 ASSY
1205	X-3678-523-1	o	REAR PANEL ASSY
1206	X-3678-525-1	o	BACK TALLY BRACKET ASSY
1207	1-777-662-11	o	WIRE, FLAT TYPE (24 CORE)
1208	2-118-858-01	o	GUARD (SQUARE 9), SWITCH
1209	2-391-520-21	s	BOLT (M5X12), HOLE, HEXAGON
1210	3-185-867-01	o	CATCHER, MAGNET
1211	3-185-869-01	s	SHIELD, SOFT
1212	3-185-872-01	s	KNOB VOLUME DIA. 6
1213	3-185-875-01	o	HINGE, REAR
1214	3-185-876-01	o	COVER, LED
1215	3-185-909-01	o	COVER, BACK TALLY
1216	3-185-924-02	o	GUIDE, LENS BAR
1217	3-185-944-01	o	LID, REAR PANEL
1218	3-187-628-01	o	CUSHION, LIGHT INTERCEP TION
1219	3-565-714-00	o	SHAFT, FITTING, PC BOARD
1220	3-602-483-01	s	KNOB,VOLUME 6 DIA.
1221	3-644-002-00	o	CUSHION, HANDLE
1222	3-673-018-00	s	SCREW, BLIND
1223	3-692-320-01	o	BUTTON “R”
1224	3-692-321-01	o	BUTTON “G”
1225	3-692-322-01	o	BUTTON “B”
1226	3-692-324-01	o	BUTTON “RET2”
1227	3-692-325-01	o	BUTTON “RET1”
1228	3-701-441-11	s	WASHER
1229	3-708-930-01	s	CAP “1”
1230	3-708-930-11	s	CAP “2”
1231	3-708-930-21	s	CAP “3”
1232	3-708-932-01	s	CAP “ON”
1233	3-708-933-01	s	CAP “STORE”
1234	3-708-933-11	s	CAP “CALL”
1235	3-708-934-01	s	CAP “FILTER LOCAL”
1236	3-710-803-02	o	HOLDER, DIA. 5-9 LED
1237	3-729-007-01	o	PLATE, ORNAMENTAL, TOGGLE SW
1238	3-741-789-01	o	SPACER

http://getMANUAL.com

1-2-2. HDC-750

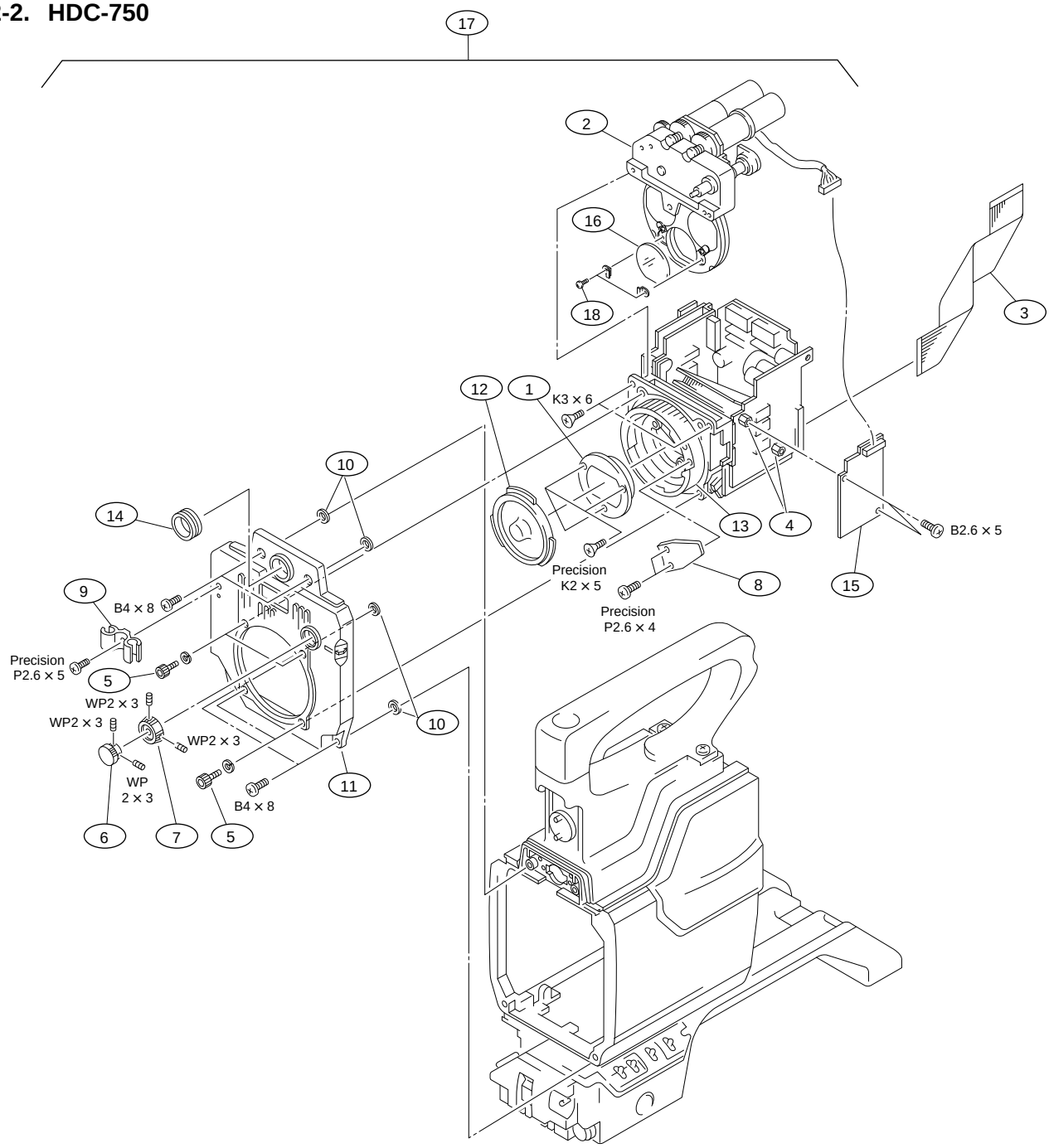

No.	Part No.	SP	Description
1	1-547-936-11	o	FILTER UNIT, OPTICAL
2	1-547-945-11	o	DISK UNIT, FILTER
3	1-777-887-11	o	FLEXIBLE CARD WIRE (28 CORE)
4	2-270-601-00	o	SUPPORT
5	2-623-773-11	s	BOLT (M3X8), STAINLESS
6	3-177-457-01	s	KNOB (ND), FILTER
7	3-177-458-01	s	KNOB (CC), FILTER
8	9-980-076-01	s	LEVER, MOUNT
9	3-679-659-03	o	CLAMP,CABLE
10	3-687-116-01	o	WASHER (4), STOPPER
11	3-692-188-01	o	PANEL,FRONT
12	3-699-048-01	s	CAP, MOUNT
13	9-980-077-01	o	RING, BAYONET
14	3-710-024-01	o	PACKING, VF
15	9-939-195-01	o	MOUNTED CIRCUIT BOARD, SERVO DRIVER

No.	Part No.	SP	Description
16	9-939-640-01	o	FILTER, (CLEAR) *1
	9-939-641-01	o	FILTER,ND 2 (1/4ND) *1
	9-939-643-01	o	FILTER,ND 3 (1/16ND)*1
	9-939-644-01	o	FILTER,ND 4 (1/64ND)*1
	9-939-645-01	o	FILTER,CC A (CROSS) *1
	9-939-647-01	o	FILTER,CC C (4300K) *1
	9-939-648-01	o	FILTER,CC D (6300K) *1
17	CCD Unit : HKC-C750		
18	7-627-553-18	s	SCREW, PRECISION P2X2 (Q'ty:2)
	9-980-078-01	s	SCREW (113M) (Q'ty:8)

*1 See HDC-750 Maintenance manual Volume1, Section 2-8, for details.

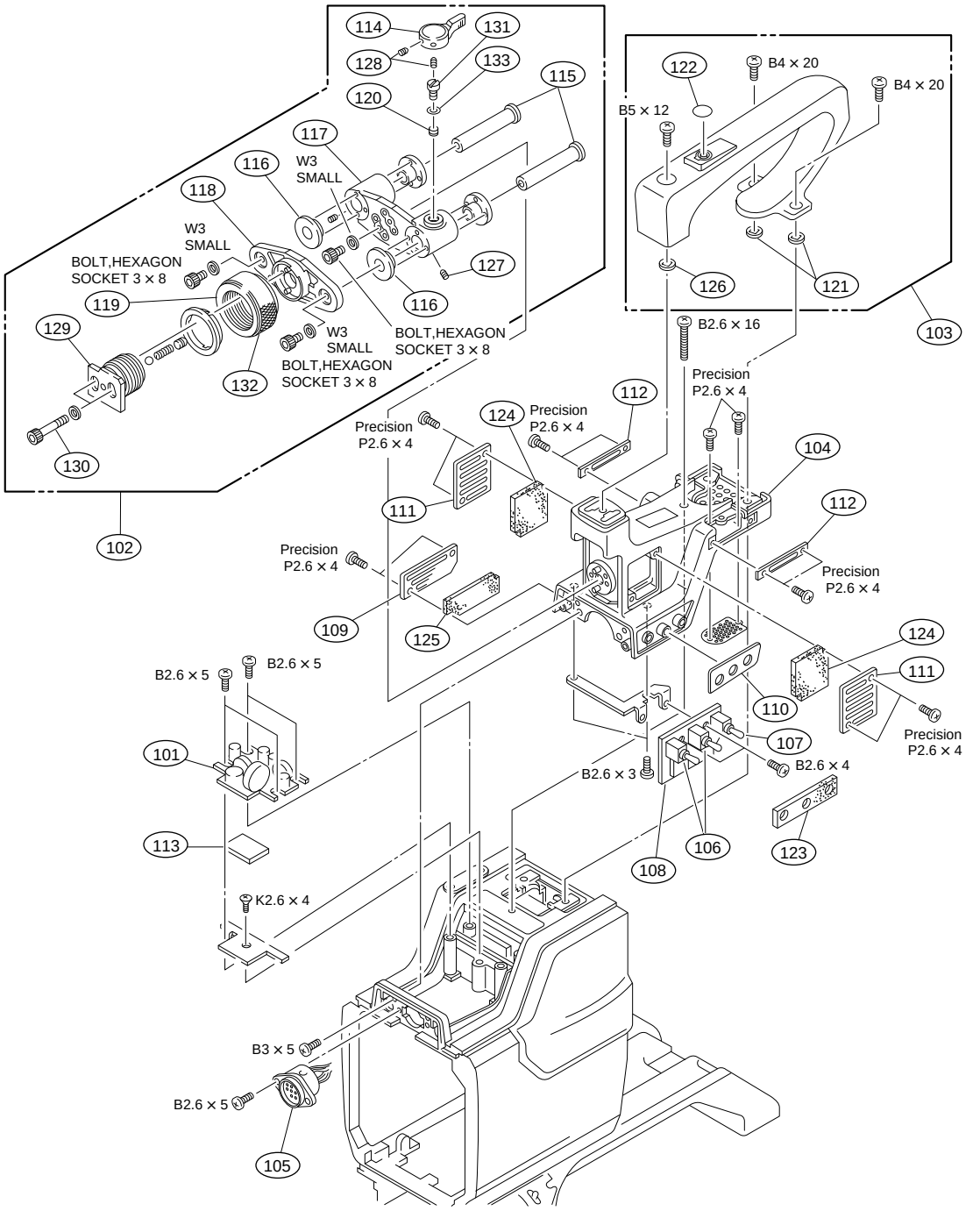

No.	Part No.	SP	Description
101	A-8273-225-A	s	MOUNTED CIRCUIT BOARD, PS-419
102	A-8278-029-A	o	SLIDE ASSY,VF
103	X-3678-538-2	o	HANDLE ASSY
104	X-3678-574-1	o	SUB ASSY,HANDLE HOLDER
105	1-565-051-21	o	CONNECTOR, 20P FEMALE "VF"
106	1-570-985-11	s	SWITCH, TOGGLE "VF DISP" "RGB"
107	1-571-396-11	s	SWITCH, SLIDE TOGGLE "Y/RGB"
108	1-660-233-11	o	PRINTED CIRCUIT BOARD, SW-806
109	3-602-423-01	o	PLATE(3), INTAKE
110	3-602-436-01	o	PLATE,MENU
111	3-602-450-01	o	PLATE(1),INTAKE
112	3-602-466-01	o	PLATE(2),INTAKE
113	3-602-471-01	o	SHEET,SILICONE
114	3-673-046-00	s	LEVER, LOCK
115	3-679-683-01	o	ARM,SLIDE
116	3-679-684-01	o	REST,ARM
117	3-679-685-01	o	TABEL,FIXED,VF SLIDE
118	3-679-686-01	o	TABEL,FIXED,VF SHOE
119	3-679-698-01	o	RING(C),LOCK
120	3-679-702-01	o	CUSION,STOPPER
121	3-687-116-01	o	WASHER (4), STOPPER
122	3-692-649-01	o	SHEET,BLIND
123	3-693-984-01	o	CUSHION,DROP PROTECTION(3)
124	3-696-950-01	o	FILTER(1),DUST PROTECTION
125	3-696-951-01	o	FILTER(2),DUST PROTECTION
126	3-701-442-21	s	WASHER, 4.5
127	3-701-506-01	s	SET SCREW, DOUBLE POINT 3X4
128	3-701-508-00	s	SET SCREW, DOUBLE POINT 3X6
129	3-710-039-03	s	SHOE, SLIDE
130	3-711-765-01	s	BOLT (M3), HEXAGON SOCKET
131	3-711-794-01	o	PIN, STOPPER
132	3-720-919-01	o	RUBBER, LOCK RING
133	3-895-622-01	s	RING (DIA. 5), O

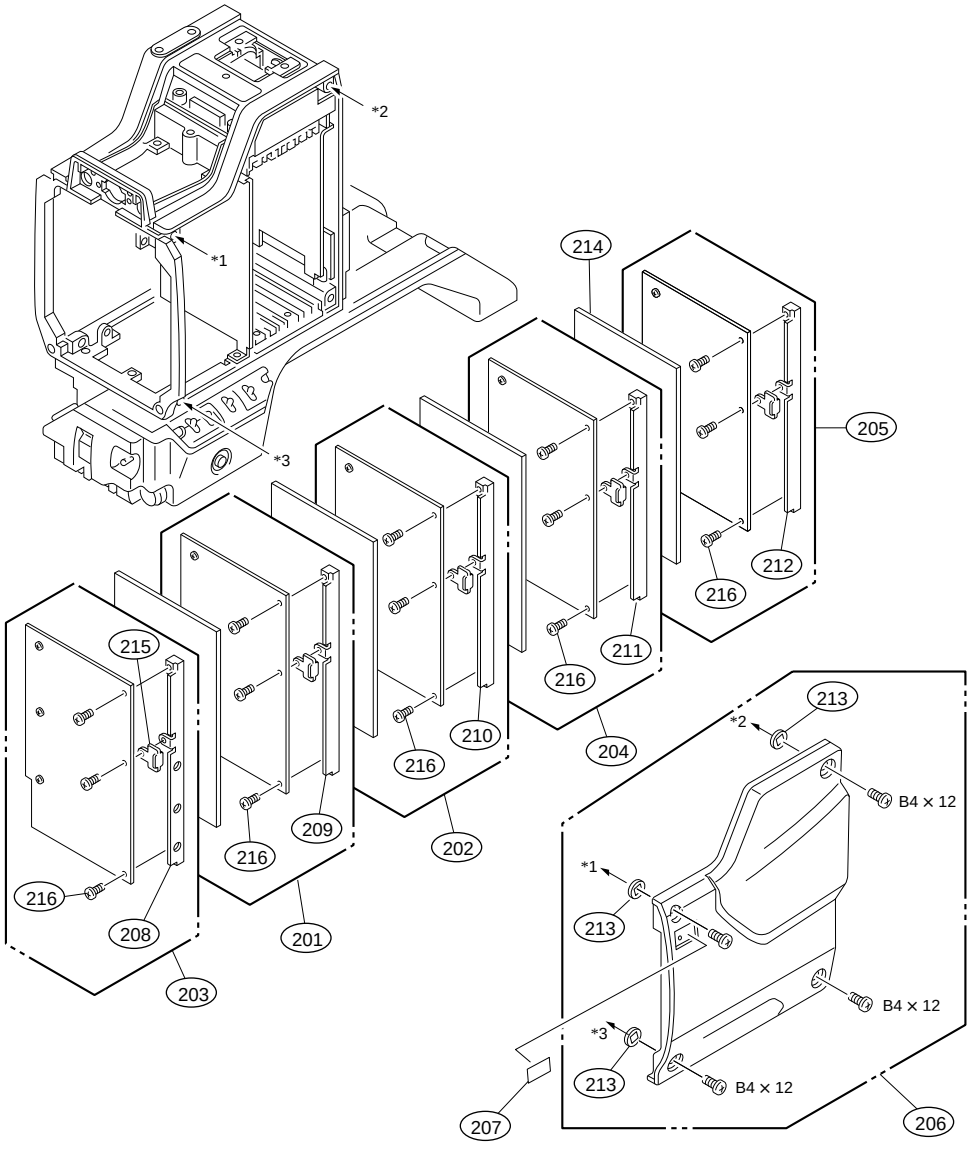

No.	Part No.	SP	Description
201	A-8273-212-A	o	MOUNTED CIRCUIT BOARD, MX-59
202	A-8273-213-A	o	MOUNTED CIRCUIT BOARD, PR-200
203	A-8273-215-A	o	MOUNTED CIRCUIT BOARD, VA-158
204	A-8273-223-A	o	MOUNTED CIRCUIT BOARD, DL-65
205	A-8273-224-A	o	MOUNTED CIRCUIT BOARD, IE-44
206	X-3679-333-1	o	PANEL ASSY, RIGHT
207	3-182-055-01	o	LABEL (1), FILTER
208	3-602-406-01	o	PANEL,VA-158 PC BOARD
209	3-602-407-01	o	PANEL,MX-59 PC BOARD
210	3-602-408-01	o	PANEL,PR-200 PC BOARD
211	3-602-409-01	o	PANEL,DL-65 PC BOARD
212	3-602-410-01	o	PANEL,IE-44 PC BOARD
213	3-687-116-01	o	WASHER (4), STOPPER
214	3-692-642-02	o	SHEET,SHIELD
215	3-724-753-01	o	RING
216	3-729-061-01	s	SCREW (M2X4.5) (TYPE 1)

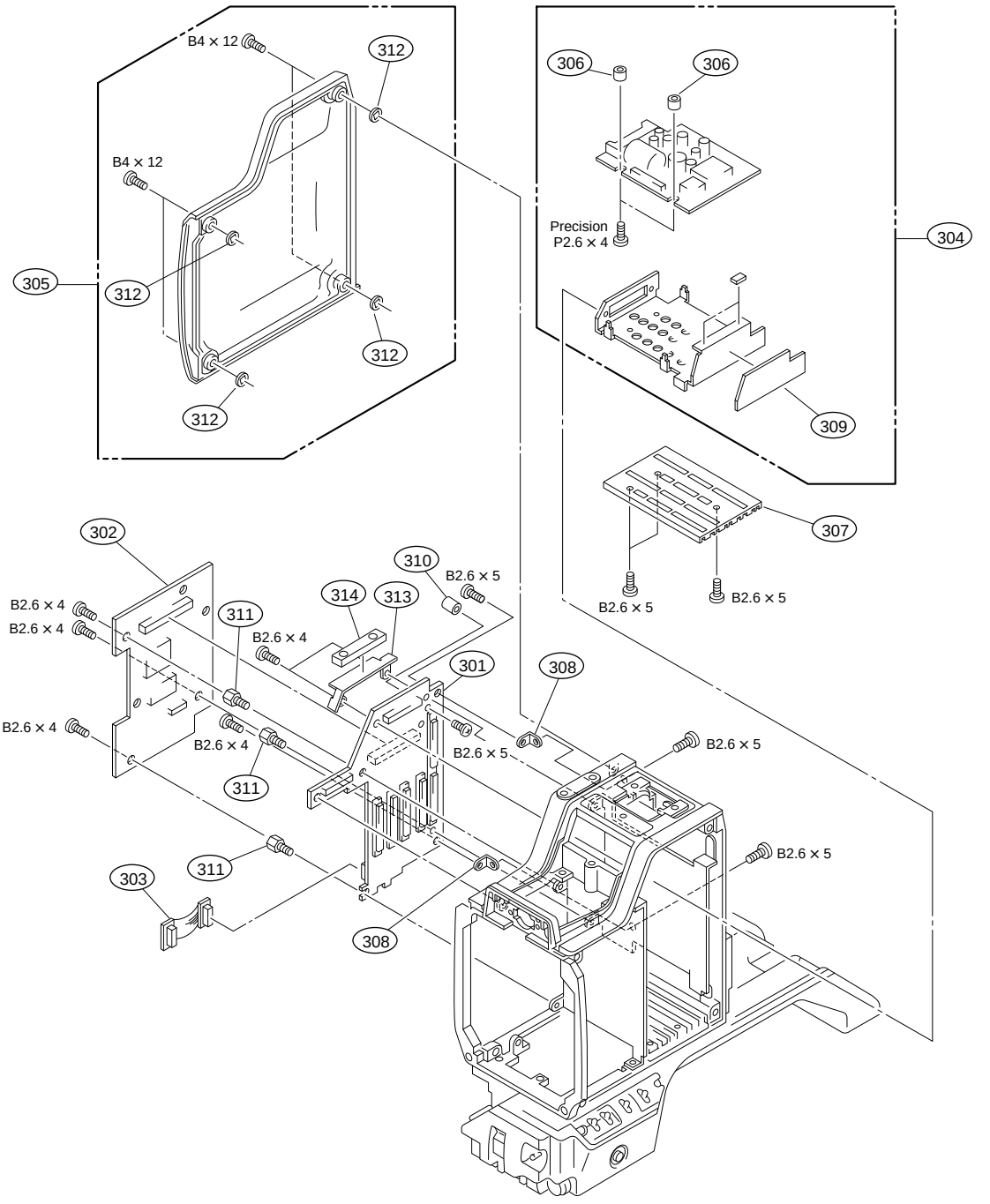

No.	Part No.	SP	Description
301	A-8273-211-A	o	MOUNTED CIRCUIT BOARD, MB-570
302	A-8273-214-A	o	MOUNTED CIRCUIT BOARD, IF-569
303	A-8273-249-A	o	MOUNTED CIRCUIT BOARD, CN-1334
304	A-8311-760-A	s	POWER ASSY
305	X-3678-527-3	o	PANEL ASSY, LEFT
306	3-602-434-02	o	SUPPORT,PC BOARD
307	3-602-448-01	o	RAIL, PC BOARD (1)
308	3-602-449-01	o	BRACKET,MB
309	3-602-457-01	o	LABEL,PC BOARD
310	3-602-472-02	o	SUPPORT,PC BOARD
311	3-602-473-02	o	SPACER,PC BOARD
312	3-687-116-01	o	WASHER (4), STOPPER
313	3-609-705-01	o	GUARD, SCREW *1
314	3-609-706-01	o	CUSHION, GUARD *1

*1 :S/N 10096 -

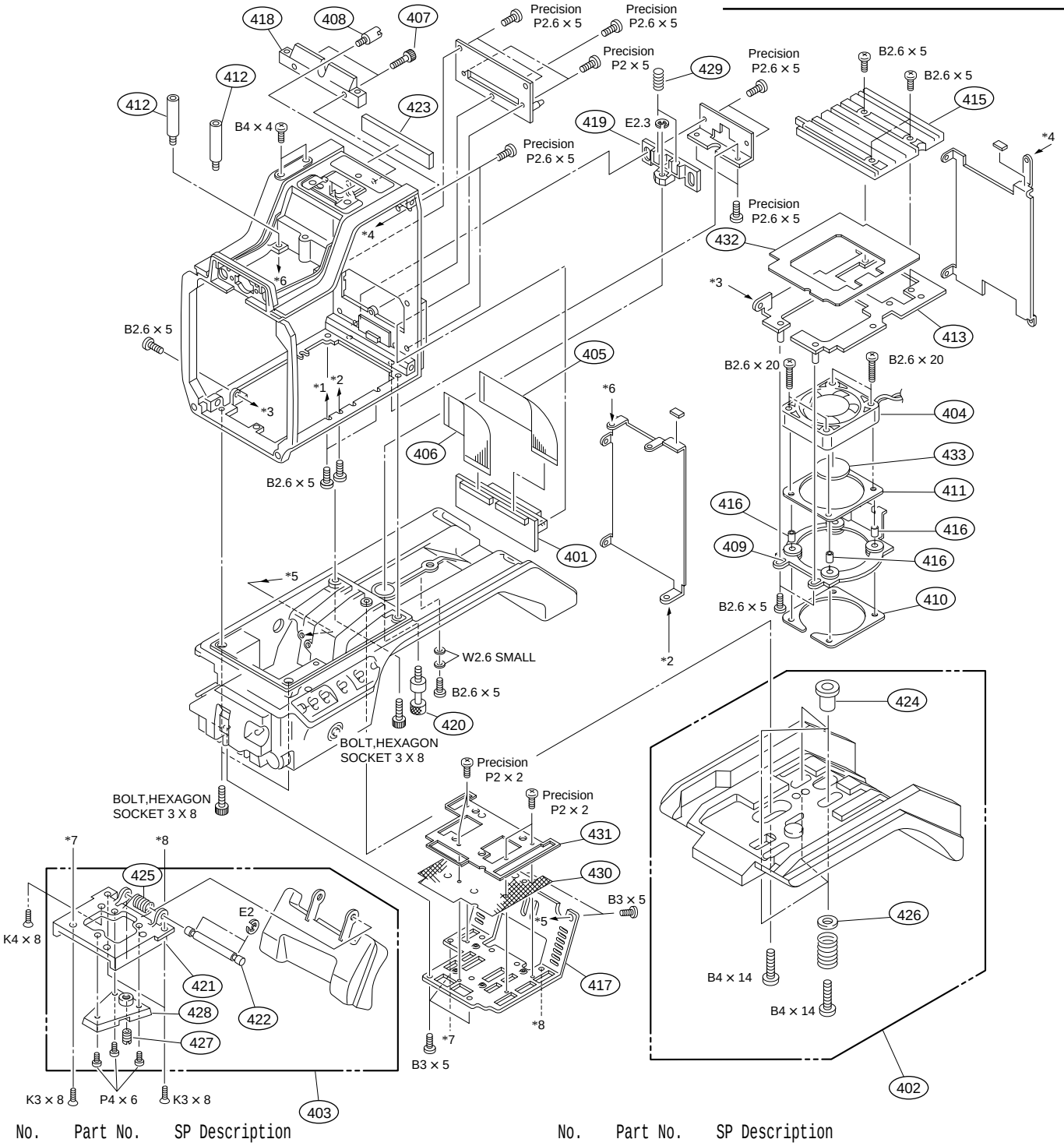

No.	Part No.	SP	Description
401	A-8273-228-A	o	MOUNTED CIRCUIT BOARD, CN-1034
402	A-8278-237-A	s	PAD ASSY,SHOULDER(LARGE)
403	A-8278-238-B	s	PAD ASSY,SHOULDER(SMALL)
404	1-698-775-11	s	FAN, DC
405	1-777-168-11	o	CABLE, FLEXIBLE FLAT (30 CORE)
406	1-777-169-11	o	CABLE, FLEXIBLE FLAT (30 CORE)
407	2-623-773-11	s	BOLT (M3X8), STAINLESS
408	3-168-296-01	s	PIN, ID
409	3-175-712-01	o	BUSHING, RUBBER
410	3-175-713-01	o	NUT, PLATE
411	3-178-785-01	o	SPACER, FAN
412	3-602-433-02	o	SUPPORT,PC BOARD
413	3-602-445-01	o	(1)BRACKET, FAN
414	3-602-447-01	o	PLATE, FAN
415	3-602-448-01	o	RAIL, PC BOARD (1)
416	3-661-806-00	o	SPACER (2.6X4)
417	3-606-157-01	o	BRACKET V SHOE

No.	Part No.	SP	Description	
418	3-692-113-03	o	WEDGE,HANGER	
419	3-692-115-03	o	SHOE,LOCK	
420	3-692-641-03	o	ROD,LOCK	
421	3-692-643-02	o	BASE,V SHOE	
422	3-692-645-01	o	ROD,ROTARY	
423	3-692-646-01	o	SHEET,DUST PROTECTION (PS)	
424	3-692-647-01	o	SPACER,PAD	
425	3-693-973-01	s	SPRING,TORSION(SMALL)	
426	3-701-444-21	s	WASHER, 6	
427	3-742-011-01	s	SCREW, 1/4, 3/8 CONVERSION	
428	3-742-015-01	o	WEDGE (B), MOUNTING	
429	4-864-521-00	s	SPRING, COMPRESSION	
430	3-606-155-01	o	GRILL, SHIELD (BASE)	
431	3-606-156-01	o	PLATE, PRESS (BASE)	
432	3-612-703-01	o	SEAL, FAN	*1
433	3-612-704-01	o	PLATE, DAMPING	*1

*1 :S/N 10121 -

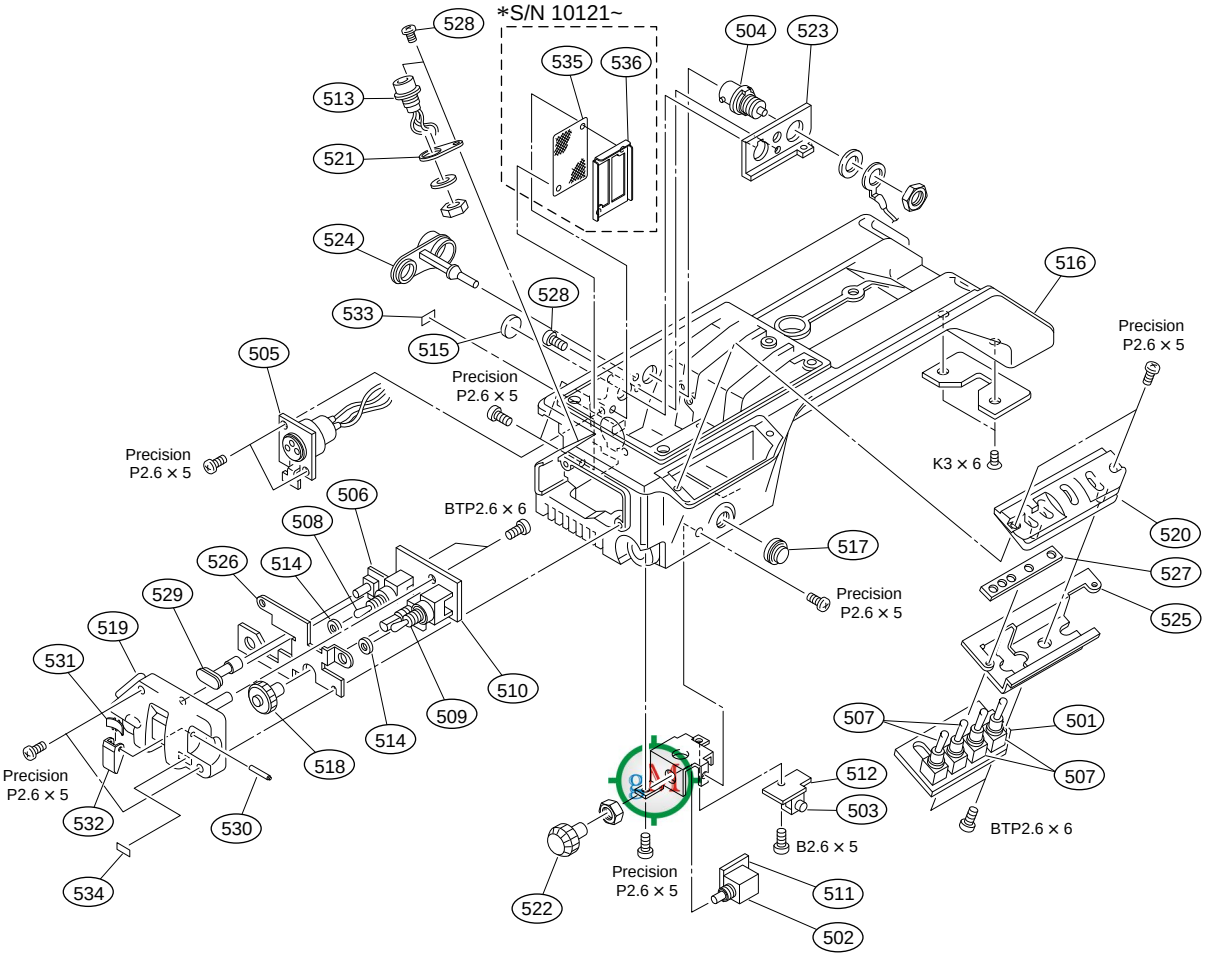

No.	Part No.	SP	Description
501	A-8273-239-A	o	MOUNTED CIRCUIT BOARD, SW-688
502	1-473-315-11	s	ENCODER, ROTARY "MENU SEL"
503	1-554-088-00	s	SWITCH, KEY BOARD "CANCEL"
504	1-561-781-91	s	CONNECTOR, BNC (RECEPTACLE)
505	1-563-029-21	s	CONNECTOR (RECEPTACLE) 3P FEMALE "MIC IN"
506	1-570-282-21	s	SWITCH, KEY BOARD "VTR START"
507	1-571-415-11	s	SWITCH, TOGGLE
508	1-571-416-11	s	SWITCH, TOGGLE "SHUTTER"
509	1-571-679-11	s	SWITCH, TOGGLE "AUTO W/B BAL"
510	1-660-234-11	o	PRINTED CIRCUIT BOARD, SW-687
511	1-660-236-11	o	PRINTED CIRCUIT BOARD, SW-689
512	1-660-237-11	o	PRINTED CIRCUIT BOARD, SW-696
513	1-695-841-12	s	CONNECTOR 12P FEMALE "LENS"
514	3-312-823-00	s	PACKING, KNOB
515	3-602-458-01	o	LABEL,BLIND
516	3-602-495-03	o	BASE, SHOULDER
517	3-676-244-11	s	COVER, SW
518	3-679-679-03	s	KNOB,VR(AUDIO)
519	3-692-107-03	o	COVER,FRONT SWITCH
520	3-692-108-01	o	GUARD,SWITCH

No.	Part No.	SP	Description	
521	3-692-110-02	o	BRACKET,CONNECTOR	
522	3-692-111-01	s	KNOB,RE	
523	3-692-149-02	o	BRACKET,CONNECTOR(TEST OUT)	
524	3-692-644-02	o	CAP,CONNECTOR	
525	3-693-974-01	o	PLATE,SHIELD(SIDE)	
526	3-693-976-01	o	PLATE,SHIELD(FRONT)	
527	3-693-983-01	o	CUSHION,DROP PROTECTION(2)	
528	3-694-181-01	s	TYPE1,AROCK PRECISION +P2.6X5	
529	3-729-069-01	s	BUTTON, VTR START	
530	3-742-065-01	o	SHAFT, SHUTTER	
531	3-742-066-11	o	SPRING, SHUTTER	
532	3-742-067-04	o	LID, SHUTTER	
533	3-608-514-01	o	MIC LABEL	
534	3-608-515-01	o	EARPHONE LABEL	
535	3-612-371-01	o	GRILL, BASE	*1
536	3-612-372-02	o	PLATE, FIX GRILL	*1

*1 :S/N 10121 -

1-2-3. HDCA-750

HDCA-750 : S/N 11001 and higher

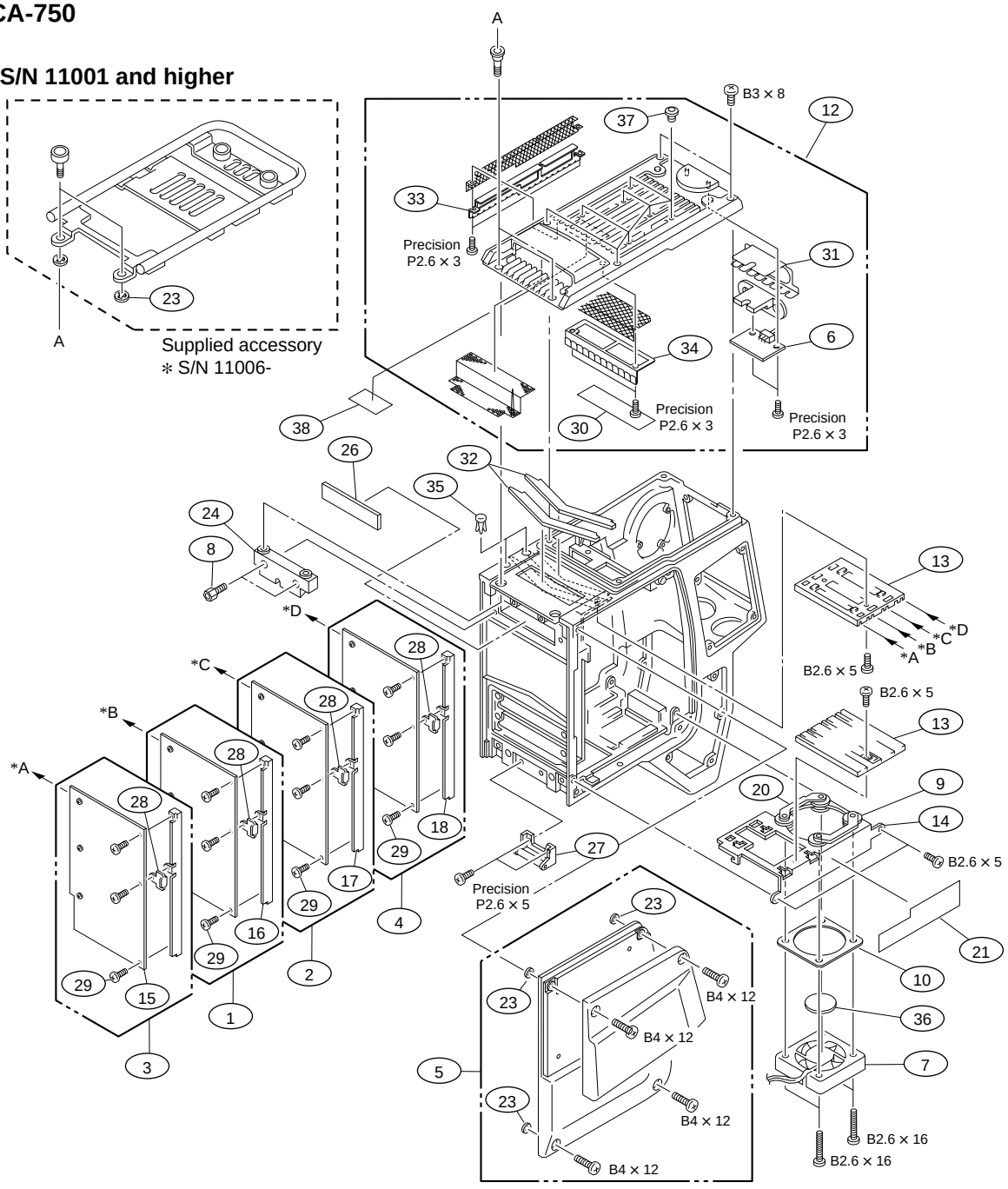

No.	Part No.	SP	Description
1	A-8273-132-A	o	MOUNTED CIRCUIT BOARD, AU-203
2	A-8273-135-A	o	MOUNTED CIRCUIT BOARD, DAP-5
3	A-8273-138-A	o	MOUNTED CIRCUIT BOARD, VDA-31
4	A-8273-139-A	o	MOUNTED CIRCUIT BOARD, SG-226
5	X-3678-453-1	o	PANEL ASSY, RIGHT
6	1-660-258-11	o	PRINTED CIRCUIT BOARD, LP-95
7	1-698-775-11	s	FAN, DC
8	2-623-773-11	s	BOLT (M3X8), STAINLESS
9	3-175-712-01	o	BUSHING, RUBBER
10	3-178-785-01	o	SPACER, FAN
12	A-8315-187-B	o	PANEL ASSY ,TOP
13	3-602-411-01	o	RAIL(CA), BOARD
14	3-602-426-01	o	BRACKET(2),FAN
15	3-602-438-01	o	PANEL,VDA-31 PC BOARD
16	3-602-439-03	o	PANEL,AU-203 PC BOARD
17	3-602-440-01	o	PANEL, DAP PC BOARD
18	3-602-441-02	o	PANEL,SG-226 PC BOARD
20	3-602-453-01	o	PLATE NUT, FAN
21	3-602-497-01	o	LABEL, BOARD
23	3-687-116-01	o	WASHER (4), STOPPER
24	3-692-113-03	o	WEDGE,HANGER
26	3-692-187-02	o	PLATE,PROTECTION
27	3-692-650-03	o	PLATE,LOCK
28	3-724-753-01	o	RING
29	3-729-061-01	s	SCREW (M2X4.5) (TYPE 1)
30	3-611-275-01	o	TAPE
31	3-611-276-01	o	SPRING,GND,T-REAR
32	3-611-278-01	o	CUSHION,DROP,PROTECTION
33	3-611-280-01	o	SPRING,GND,T-L
34	3-611-282-01	o	SPRING,GND,T-F
35	3-545-657-11	s	BUSH
36	3-612-704-01	o	PLATE, DUMPING
37	3-673-018-11	s	SCREW, BLIND
38	3-613-864-01	o	SHEET, SLICON (1)

1-2-3. HDCA-750

HDCA-750 : S/N 10001 through 11000

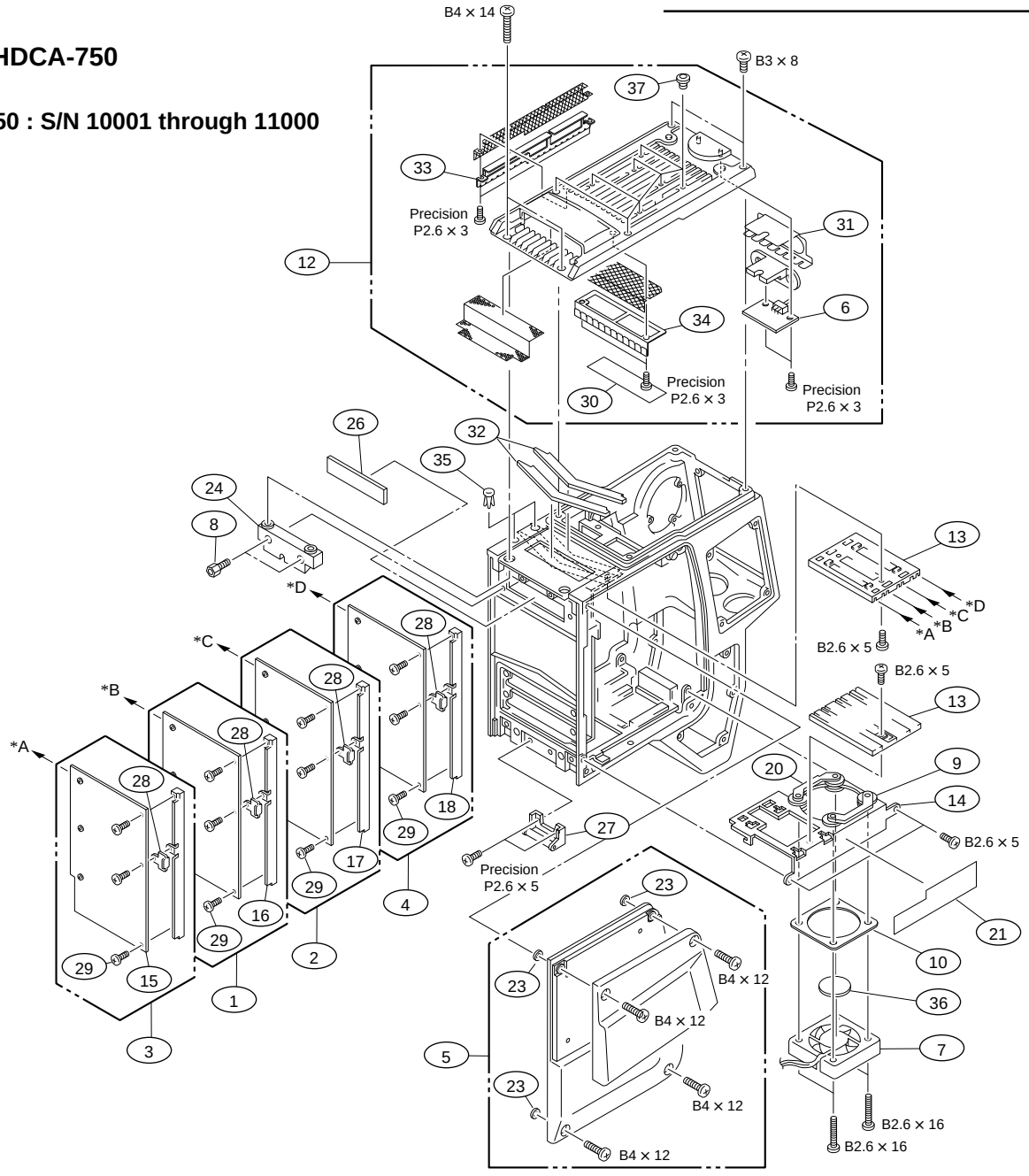

No.	Part No.	SP	Description
1	A-8273-132-A	o	MOUNTED CIRCUIT BOARD, AU-203
2	A-8273-135-A	o	MOUNTED CIRCUIT BOARD, DAP-5
3	A-8273-138-A	o	MOUNTED CIRCUIT BOARD, VDA-31
4	A-8273-139-A	o	MOUNTED CIRCUIT BOARD, SG-226
5	X-3678-453-1	o	PANEL ASSY, RIGHT
6	1-660-258-11	o	PRINTED CIRCUIT BOARD, LP-95
7	1-698-775-11	s	FAN, DC
8	2-623-773-11	s	BOLT (M3X8), STAINLESS
9	3-175-712-01	o	BUSHING, RUBBER
10	3-178-785-01	o	SPACER, FAN
12	A-8315-187-B	o	PANEL ASSY ,TOP
13	3-602-411-01	o	RAIL(CA), BOARD
14	3-602-426-01	o	BRACKET(2),FAN
15	3-602-438-01	o	PANEL,VDA-31 PC BOARD
16	3-602-439-03	o	PANEL,AU-203 PC BOARD *2
	3-602-439-01	o	PANEL,AU-203 PC BOARD *1
17	3-602-440-01	o	PANEL, DAP PC BOARD
18	3-602-441-02	o	PANEL,SG-226 PC BOARD
20	3-602-453-01	o	PLATE NUT, FAN

No.	Part No.	SP	Description	
21	3-602-497-01	o	LABEL, BOARD	
23	3-687-116-01	o	WASHER (4), STOPPER	
24	3-692-113-03	o	WEDGE,HANGER	
26	3-692-187-02	o	PLATE,PROTECTION	
27	3-692-650-03	o	PLATE,LOCK	
28	3-724-753-01	o	RING	
29	3-729-061-01	s	SCREW (M2X4.5) (TYPE 1)	
30	3-611-275-01	o	TAPE	*3
31	3-611-276-01	o	SPRING,GND,T-REAR	*3
32	3-611-278-01	o	CUSHION,DROP,PROTECTION	*3
33	3-611-280-01	o	SPRING,GND,T-L	*3
34	3-611-282-01	o	SPRING,GND,T-F	*3
35	3-545-657-11	s	BUSH	*3
36	3-612-704-01	o	PLATE, DUMPING	*4
37	3-673-018-11	s	SCREW, BLIND	*4

*1 :S/N 10001 - 10095
*2 :S/N 10096 -
*3 :S/N 10111 -
*4 :S/N 10126 -

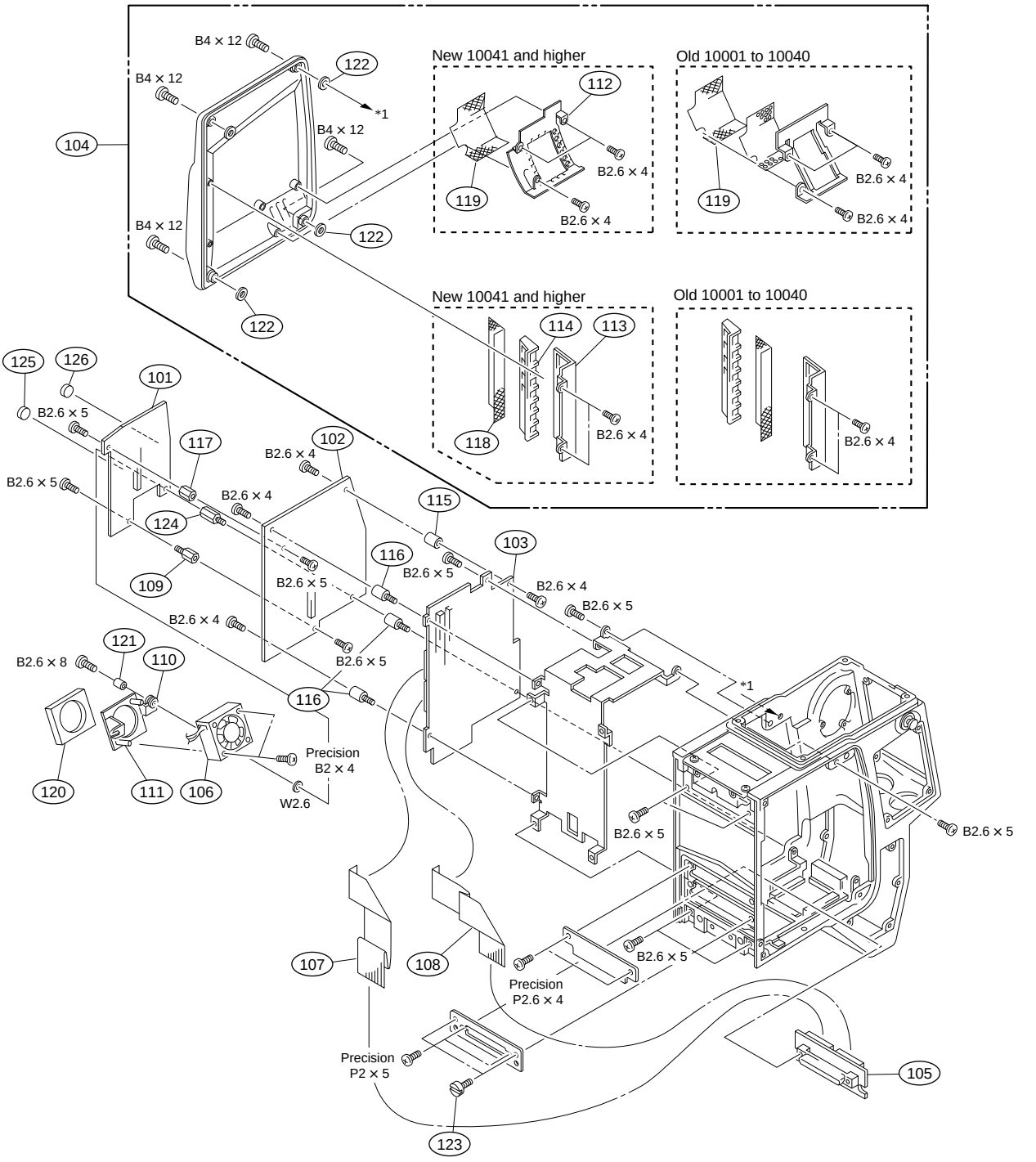

No.	Part No.	SP	Description
101	⚠ A-8273-134-A	o	MOUNTED CIRCUIT BOARD, SDI-10
102	A-8273-137-A	o	MOUNTED CIRCUIT BOARD, DAD-19
103	A-8273-140-A	o	MOUNTED CIRCUIT BOARD, MB-573
104	A-8273-142-B	o	PANEL ASSY, CA LEFT
105	A-8273-156-A	o	MOUNTED CIRCUIT BOARD, CN-1039
106	1-698-774-11	s	MOTOR, FAN
107	1-777-166-11	o	CABLE, FLEXIBLE FLAT (30 CORE)
108	1-777-167-11	o	CABLE, FLEXIBLE FLAT (30 CORE)
109	2-130-288-01	o	SUPPORT
110	3-175-712-01	o	BUSHING, RUBBER
111	3-602-416-01	o	HOLDER,FAN(30)
112	3-602-427-02	o	HOLDER, GRILL
113	3-602-428-01	o	HOLDER, INTAKE
114	3-602-429-02	o	GRILL, INTAKE
115	3-602-434-02	o	SUPPORT,PC BOARD
116	3-602-435-02	o	SUPPORT,PC BOARD(A)
117	3-602-444-01	o	SPACER,FROAT
118	3-603-282-01	o	FIN, DUCT
119	3-604-771-01	o	GRILL, SIDE PANEL
120	3-605-546-01	s	CUSHION, FAN
121	3-661-806-00	o	SPACER (2.6X4)
122	3-687-116-01	o	WASHER (4), STOPPER
123	3-692-174-02	s	SCREW,FLOATING
124	3-605-939-01	o	SUPPORT, PWD (SDI)
125	3-609-749-01	o	SHEET (L), SILICON (t3)
126	3-609-750-01	o	SHEET (L), SILICON (t5)

http://getMANUAL.com

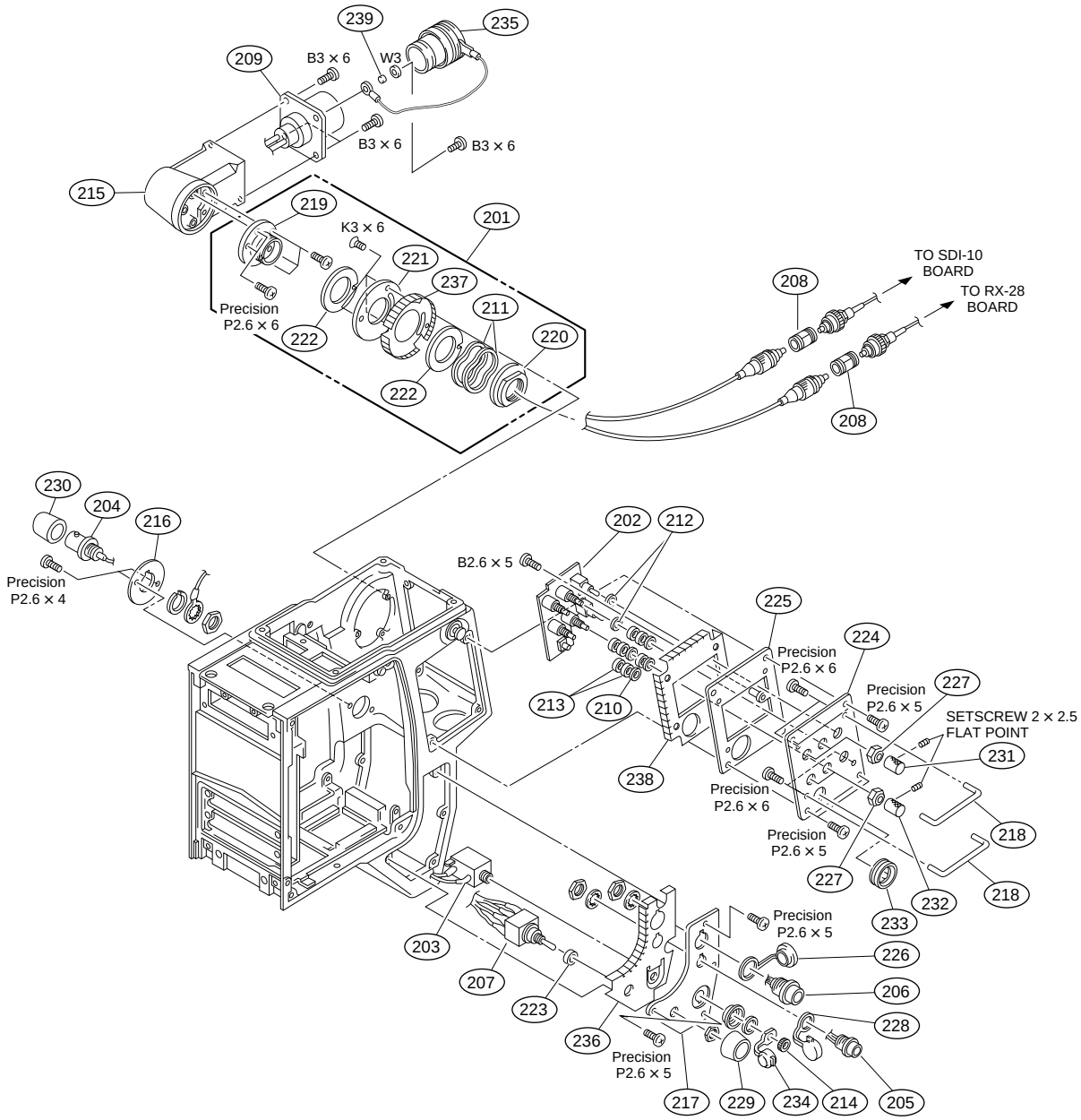

No.	Part No.	SP	Description
201	A-8273-147-C	o	CONNECTOR ASSY, OPTICAL
202	A-8273-157-A	o	MOUNTED CIRCUIT BOARD, SW-690
203	1-507-251-99	s	JACK "EARPHONE"
204	1-561-781-91	s	CONNECTOR, BNC "GLK/PROMPT"
205	1-563-833-11	s	CONNECTOR, 6P FEMALE "RET CONT"
206	1-695-841-12	s	CONNECTOR, 12P FEMALE "VF"
207	1-762-548-11	s	SWITCH, TOGGLE "POWER"
208	1-774-993-11	o	CONNECTOR, OPTICAL (FC TYPE)
209	1-777-205-12	s	CABLE ASSEMBLY, ENCAPSULATE (M)
210	2-529-509-01	o	PACKING
211	3-176-525-01	o	WASHER, SPRING
212	3-312-823-00	s	PACKING, KNOB
213	3-345-857-01	s	WASHER, POLY-SLIDER
214	3-437-229-01	s	INSULATOR (B), JACK
215	3-602-404-01	o	HOUSING, CONECTOR
216	3-602-417-02	o	PANEL, GLK
217	3-602-418-02	o	PANEL, REMOTE
218	3-602-452-01	o	GUARD, SWITCH
219	3-602-460-03	o	SHAFT, CONECTOR
220	3-602-461-01	o	NUT, CONECTOR
221	3-602-462-01	o	PLATE,TRIAX
222	3-602-464-01	o	WASHER, CONDUCTIVE
223	3-602-467-01	o	SPACER, SWITCH
224	3-602-980-01	o	PANEL, SWITCH
225	3-602-981-01	o	SPACER, PANEL
226	3-678-769-00	s	CAP
227	3-685-104-01	s	NUT (M6), CONTROL
228	3-685-115-01	s	CAP (6P), DROP PROTECTION
229	3-692-177-02	o	COVER,SWITCH PS
230	3-717-823-01	s	COVER, BNC
231	3-722-486-11	s	KNOB
232	3-722-486-21	s	KNOB
233	3-731-742-01	s	COVER (LARGE), SW
234	3-849-405-00	s	COVER, EARPHONE JACK
235	9-880-331-01	s	CAP, CONNECTOR
236	3-605-891-01	o	PLATE (P), CONDUCTIVE
237	3-605-949-01	o	PLATE (OP), CONDUCTIVE
238	3-606-128-01	o	PLATE (SW), CONDUCTIVE
239	3-654-058-21	o	SPACER (3X2.5)

HDCA-750 : S/N 10001 through 11000

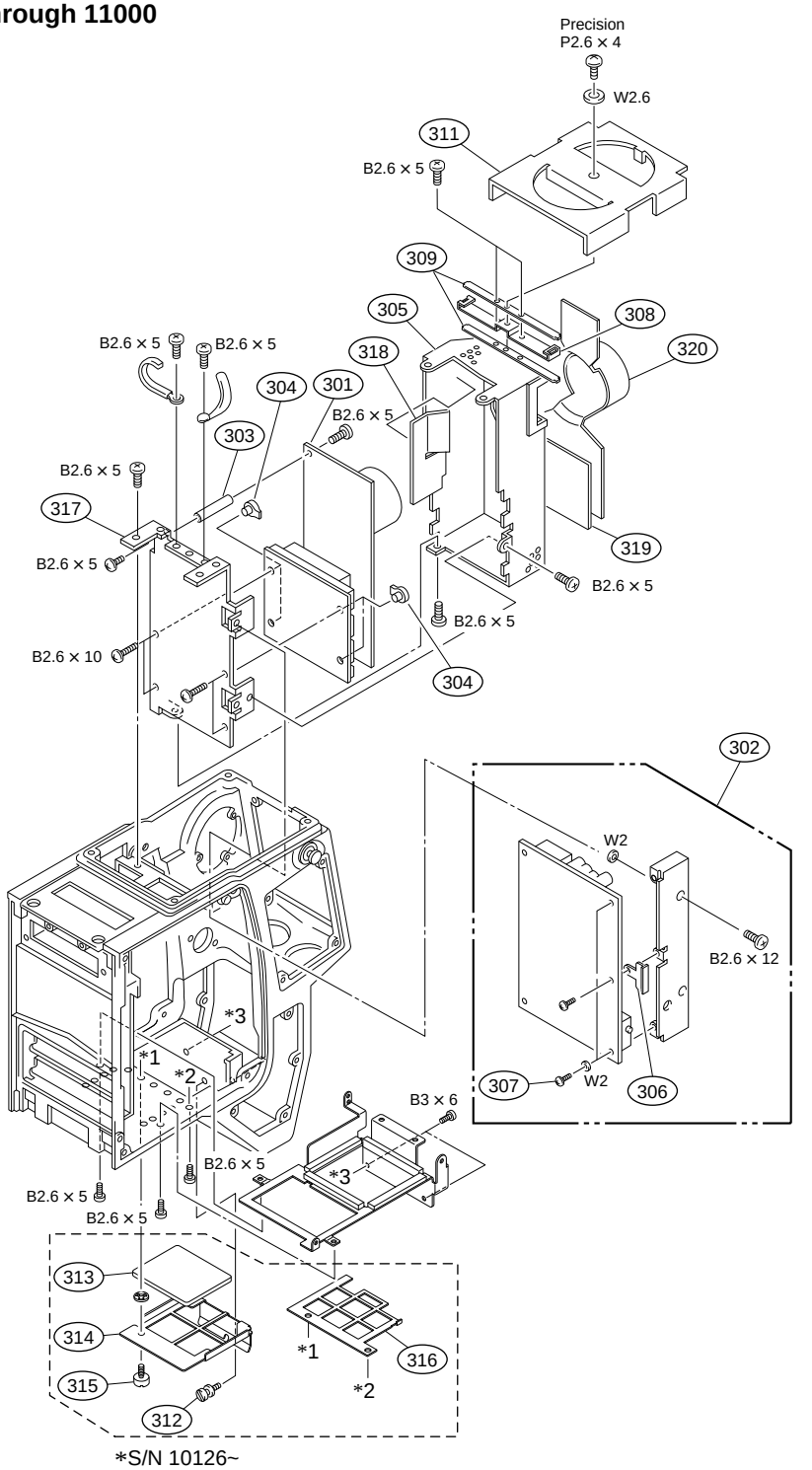

No.	Part No.	SP	Description	
301	A-8273-136-A	s	MOUNTED CIRCUIT BOARD, PS-401	
302	A-8273-150-A	o	MOUNTED CIRCUIT BOARD, PS-400	
303	2-250-541-00	s	SUPPORT (A), PC BOARD	
304	3-185-962-01	o	NUT, INSULATED	
305	3-602-415-04	o	SHIELD,PS(LARGE)	
306	3-724-753-01	o	RING	
307	3-729-061-01	s	SCREW (M2X4.5) (TYPE 1)	
308	3-606-124-01	s	PLATE, CLAMP	
309	3-606-125-02	s	BELT,CLAMP	
311	3-608-527-01	s	PLATE, BLIND	*1

No.	Part No.	SP	Description	
312	3-612-384-01	o	HOOK HOLDER	*2
313	3-612-706-01	s	FILTER (CA), DUST PROTECTION	*2
314	3-612-707-01	o	HOLDER FILTER	*2
315	3-612-708-01	s	SCREW, HOLDER	*2
316	3-612-709-01	o	HOLDER, FILTER (IN)	*2
317	3-602-413-02	o	HEAT SINK	
318	3-605-548-01	o	PLATE (A), INSULATING	
319	3-605-549-01	o	PLATE (B), INSULATING	
320	3-606-158-01	o	SHEET (1), PS INSULATING	

*1 :S/N 10001 - 10110
*2 :S/N 10126 -

HDCA-750 : S/N 11001 and higher

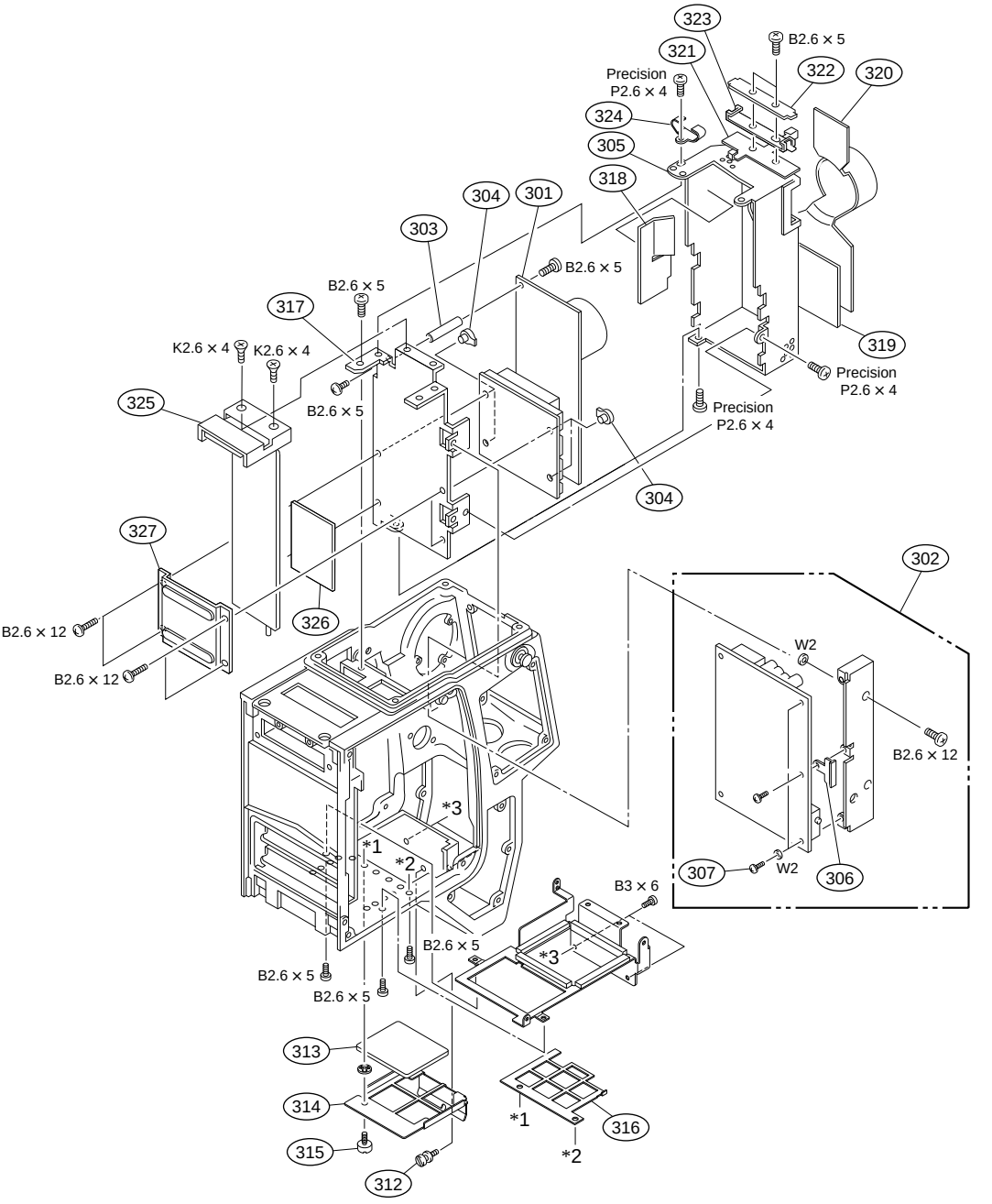

No.	Part No.	SP	Description
301	A-8273-136-A	s	MOUNTED CIRCUIT BOARD, PS-401
302	A-8273-150-A	o	MOUNTED CIRCUIT BOARD, PS-400
303	2-250-541-00	s	SUPPORT (A), PC BOARD
304	3-185-962-01	o	NUT, INSULATED
305	3-613-872-01	o	SHIELD,PS(LARGE)
306	3-724-753-01	o	RING
307	3-729-061-01	s	SCREW (M2X4.5) (TYPE 1)
308	3-606-124-01	s	PLATE, CLAMP
312	3-612-384-01	o	HOOK HOLDER
313	3-612-706-01	s	FILTER (CA), DUST PROTECTION
314	3-612-707-01	o	HOLDER FILTER
315	3-612-708-01	s	SCREW, HOLDER
316	3-612-709-01	o	HOLDER, FILTER (IN)
317	3-613-871-01	o	HEAT SINK
318	3-605-548-01	o	PLATE (A), INSULATING
319	3-605-549-01	o	PLATE (B), INSULATING
320	3-606-158-01	o	SHEET (1), PS INSULATING
321	3-613-859-01	o	GAIDE, FIBER
322	3-613-860-01	o	BELT, CLAMP
323	3-613-862-01	o	PLATE, CLAMP
324	3-613-863-01	o	HOLDER, OPT CN
325	3-613-865-01	o	PLATE, HEAT PIPE (PS2)
326	3-613-866-01	o	SHEET, THERMO
327	3-613-868-01	o	PLATE, CLAMP (H)

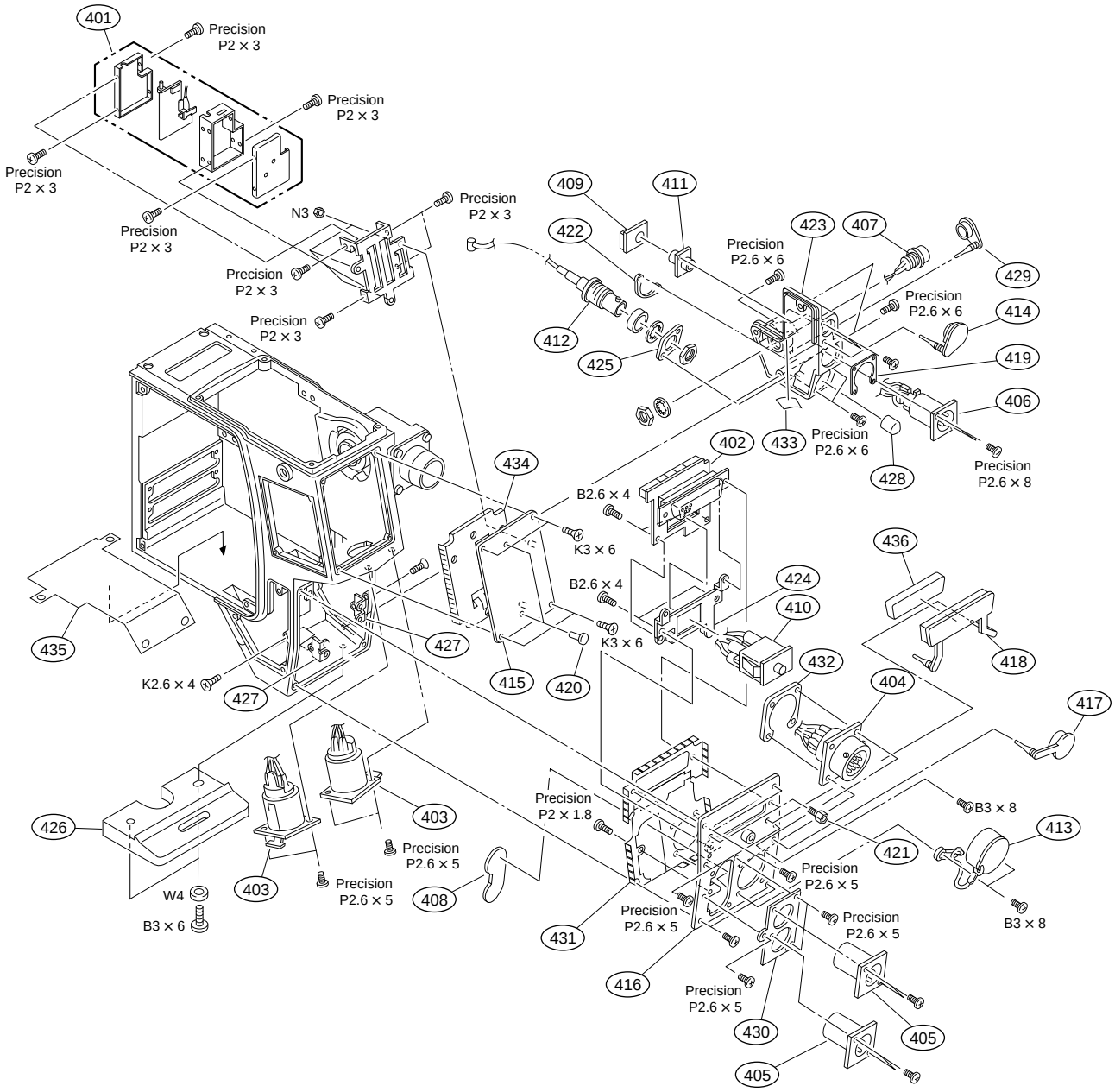

No.	Part No.	SP	Description
401	A-8273-133-A	o	MOUNTED CIRCUIT BOARD, RX-28
402	A-8273-158-A	o	MOUNTED CIRCUIT BOARD, CN-1282
403	1-509-186-31	s	CONNECTOR 5P FEMALE "INCOM"
404	1-562-244-00	o	CONNECTOR 26P MALE "VTR"
405	1-563-030-31	s	CONNECTOR, 3P MALE "MIC"
406	1-564-603-11	s	CONNECTOR (WITH DC SW) 4P MALE "DC IN"
407	1-565-072-11	s	CONNECTOR, 4P FEMALE "DC OUT"
408	1-660-062-11	o	PRINTED CIRCUIT BOARD, CN-1291
409	1-660-255-11	o	PRINTED CIRCUIT BOARD, CN-1290
410	⚠ 1-762-699-11	s	SWITCH, PUSH (POWER)
411	1-764-693-21	o	CONNECTOR, 8P FEMALE "REMOTE"
412	1-777-057-11	o	CABLE ASSEMBLY,COAXIAL (SDI-B)
413	3-166-346-01	s	CAP (CCZ), DROP PROTECTION
414	3-187-015-01	o	CONNECTOR, COVER
415	3-602-442-01	o	PLATE, CA
416	3-603-346-02	o	PANEL, MIC
417	3-605-338-01	s	CAP,CONNECTOR

No.	Part No.	SP	Description
418	3-605-339-02	s	PROTECTOR, D-SUB
419	3-605-550-01	o	SPACER, DC IN *1
420	3-673-018-11	s	SCREW, BLIND
421	3-673-910-31	s	SCREW, CONNECTOR
422	3-676-380-00	o	NUT (XLR), PLATE
423	3-696-745-04	o	BOX, POWER CONECTOR
424	3-696-746-01	o	PLATE, FIX (CN)
425	3-696-748-01	o	NUT, PLATE
426	3-612-667-01	s	GUARD, TAIL
427	3-696-917-01	o	NUT, FIX (MIC)
428	3-717-823-01	s	COVER, BNC
429	3-724-730-02	s	RUBBER (EA), DROP PROTECTION
430	3-603-262-02	o	SPACER, XLR
431	3-605-948-01	o	PLATE (M), CONDUCTIVE
432	3-605-950-01	o	NUT, PLATE
433	3-605-951-01	o	SHEET, INSULATING (DC)
434	3-606-126-01	o	PLATE (RX), CONDUCTIVE
435	3-606-127-01	o	SHIELD, BOTTOM
436	3-608-911-01	o	SHIELD, D-SUB

*1 :S/N 10001 - 11000

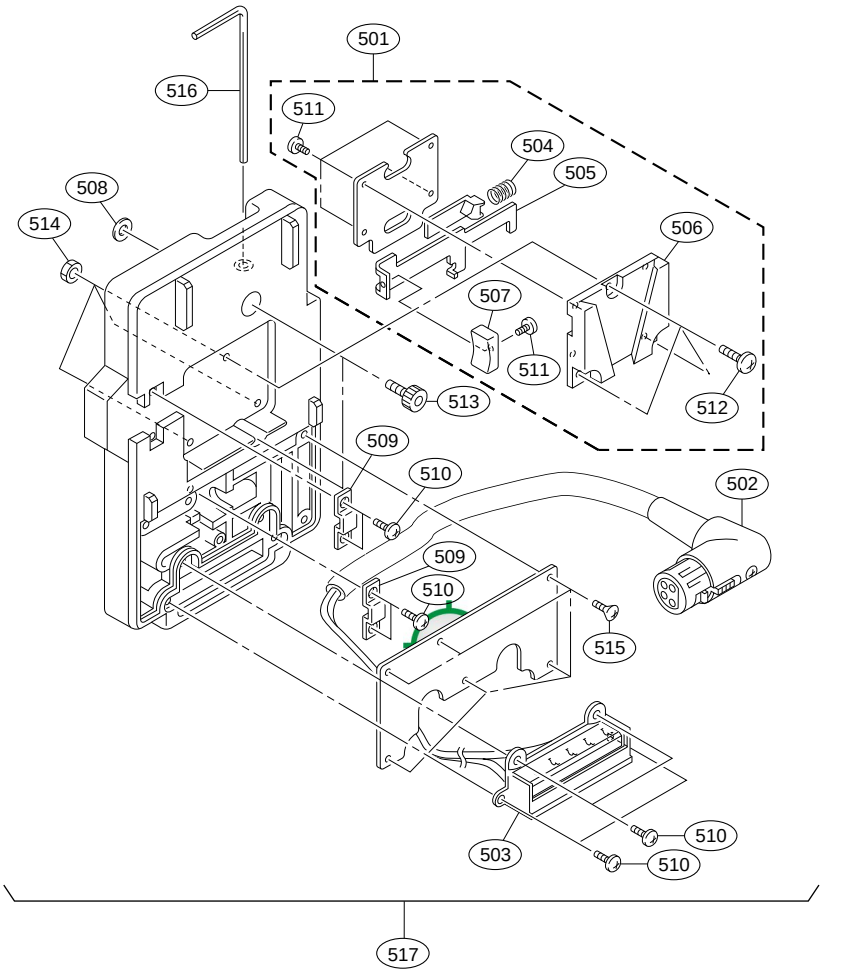

No.	Part No.	SP	Description
501	A-8278-025-C	s	MOUNT,V ASSY
502	1-557-553-11	s	CORD (WITH ROUND CONNECTOR) 4P
503	1-766-377-12	s	CONNECTOR, BATTERY
504	3-679-648-02	o	SPRING,COMPRESSION
505	3-679-688-02	o	LEVER,RELEASE
506	3-679-690-02	o	MOUNT,V
507	3-680-952-01	o	KNOB,RELEASE LEVER
508	3-687-116-01	o	WASHER (4), STOPPER
509	3-697-119-01	o	RETAINER
500	3-906-376-01	s	SCREW (2.6X6)

No.	Part No.	SP	Description
511	7-627-553-38	s	SCREW,PRECISION +P 2X3
512	7-682-549-09	s	SCREW +B 3X10
513	7-683-421-04	o	BOLT,HEXAGON SOCKET 4X12
514	7-684-023-04	s	N 3, TYPE 2
515	7-685-204-19	s	SCREW +KTP 2X6 TYPE2 NON-SLIT
516	7-721-140-60	s	WRENCH, L (3.0MM)
517	BATTERY ADAPTOR : BKP-L551		

1-2-4. Screws and Washers

Part No.	SP	Description
7-621-561-29	s	SCREW +K 2.6X8
7-621-731-08	s	SET-SCT, HEX. 2X2.5, FLAT POINT
7-621-770-99	s	SCREW +B 2.6X8
7-621-770-87	s	SCREW +B 2.6X5
7-621-771-06	s	SCREW +B 2X5 (silver)
7-621-772-20	s	SCREW +B 2X5 (black)
7-621-773-86	s	SCREW +B 2.6X4
7-621-773-87	s	SCREW +B 2.6X10
7-621-773-91	s	SCREW +B 2.6X20
7-621-775-20	s	SCREW +B 2.6X5
7-621-775-68	s	SCREW +B 2.6X12
7-621-775-80	s	SCREW +B 2.6X16 (black)
7-621-775-88	s	SCREW +B 2.6X16 (silver)
7-622-205-05	s	N M2 TYPE2
7-622-207-05	s	N 2.6, TYPE 2
7-623-208-22	s	SW 3,TYPE 2
7-623-210-22	s	SW4, TYPE2
7-623-922-11	s	WASHER 2.0, NYLON
7-623-923-01	s	WASHER 2.6
7-623-927-11	s	WASHER 6.0, NYLON
7-623-928-01	s	WASHER 8
7-624-104-04	s	STOP RING 2.0, TYPE -E
7-624-105-04	s	STOP RING 2.3, TYPE -E
7-624-106-04	s	STOP RING 3.0, TYPE -E
7-624-200-01	s	NUT, PUSH 1.5
7-624-200-11	s	NUT, PUSH 2
7-624-209-00	s	O RING P-5
7-626-314-01	s	PIN, SPRING 2X5
7-627-452-38	s	SCREW,PRECISION +K 2X5
7-627-454-17	s	SCREW, PRECISION +K 2.6X4
7-627-553-18	s	SCREW,PRECISION +P 2X2
7-627-553-37	s	SCREW,PRECISION +P 2X3
7-627-553-47	s	SCREW,PRECISION +P 2X4
7-627-553-67	s	SCREW,PRECISION +P 2X5
7-627-554-37	s	SCREW,PRECISION +P 2X1.8 TYPE1
7-627-556-37	s	SCREW,PRECISION +P 2.6X4 TYPE1
7-627-556-38	s	SCREW +P 2.6X4.0
7-627-556-57	s	PRECISION SCREW +P 2.6X5 TYPE1
7-627-556-58	s	SCREW +P 2.6X5
7-627-556-77	s	SCREW,PRECISION +P 2.6X6
7-627-556-78	s	SCREW,PRECISION +P 2.6X6 TYPE1
7-627-557-48	s	SCREW,PRECISION +P2.6X10 TYPE1
7-671-115-01	s	SCHILE BALL
7-682-160-09	s	SCREW +P 4X6
7-682-247-04	s	SCREW +K 3X6 (silver)
7-682-247-09	s	SCREW +K 3X6 (black)
7-682-248-04	s	SCREW +K 3X8 (silver)
7-682-248-09	s	SCREW +K 3X8 (black)
7-682-249-04	s	SCREW +K 3X10
7-682-251-04	s	SCREW +K 3X14
7-682-261-09	s	SCREW +K 4X8
7-682-262-04	s	SCREW +K 4X10
7-682-263-04	s	SCREW +K 4X12
7-682-544-04	s	SCREW +B 3X3
7-682-546-09	s	SCREW +B 3X5
7-682-547-09	s	SCREW +B 3X6
7-682-548-04	s	SCREW +B 3X8 (silver)
7-682-548-09	s	SCREW +B 3X8 (black)
7-682-549-09	s	SCREW +B 3X10
7-682-552-09	s	SCREW +B 3X16
7-682-553-04	s	SCREW +B 3X20
7-682-555-04	s	SCREW +B 3X30
7-682-558-09	s	SCREW +B 4X4
7-682-559-09	s	SCREW +B 4X5
7-682-561-09	s	SCREW +B 4X8
7-682-562-04	s	SCREW +B 4X10
7-682-563-09	s	SCREW +B 4X12
7-682-564-09	s	SCREW +B 4X14
7-682-566-09	s	SCREW +B 4X20
7-682-576-09	s	SCREW +B 5X12
7-682-646-09	s	SCREW +PS 3X5
7-682-903-01	s	+PWH 3X5
7-682-903-11	s	+PWH 3X6
7-682-961-01	s	+PWH 4X8
7-683-404-04	s	BOLT,HEXAGON SOCKET 3X8
7-683-405-04	s	BOLT,HEXAGON SOCKET 3X10
7-683-408-04	s	BOLT,HEXAGON SOCKET 3X16
7-683-421-04	s	BOLT,HEXAGON SOCKET 4X12
7-684-023-04	s	N 3, TYPE 2
7-685-533-19	s	SCREW +BTP 2.6X6 TYPE2 N-S (black)
7-685-534-14	o	SCREW +BTP 2.6X8 TYPE2 N-S (silver)
7-688-001-12	s	W 2, MIDDLE
7-688-002-02	s	W 2.6, SMALL
7-688-002-03	s	W 2.6, SMALL
7-688-002-12	s	W 2.6, MIDDLE
7-688-003-02	s	W 3, SMALL
7-688-003-13	s	W 3, MIDDLE
7-688-004-02	o	W 4, SMALL
7-688-004-11	o	W 4, MIDDLE
7-688-004-12	s	W 4, MIDDLE

1-3. Electrical Parts List

AT-104 BOARD

Ref. No. or Q'ty	Part No.	SP	Description
1pc	A-8273-175-A	o	MOUNTED CIRCUIT BOARD, AT-104
2pcs	3-729-061-01	s	SCREW (M2X4.5) (TYPE 1)
C2	1-164-156-11	s	CERAMIC 0.1uF 25V
C3	1-104-851-11	s	TANTALUM, CHIP 10uF 20% 10V
C4	1-135-212-21	s	TANTALUM, CHIP 2.2uF 20% 35V
C6	1-104-851-11	s	TANTALUM, CHIP 10uF 20% 10V
C7	1-164-156-11	s	CERAMIC 0.1uF 25V
C8	1-164-156-11	s	CERAMIC 0.1uF 25V
C10	1-104-851-11	s	TANTALUM, CHIP 10uF 20% 10V
C11	1-135-179-21	s	TANTAL 2.2uF 10% 16V
C12	1-104-851-11	s	TANTALUM, CHIP 10uF 20% 10V
C13	1-164-156-11	s	CERAMIC 0.1uF 25V
C15	1-162-919-11	s	CERAMIC, CHIP 22PF 5% 50V
C16	1-162-919-11	s	CERAMIC, CHIP 22PF 5% 50V
C18	1-164-156-11	s	CERAMIC 0.1uF 25V
C19	1-164-156-11	s	CERAMIC 0.1uF 25V
C20	1-164-156-11	s	CERAMIC 0.1uF 25V
C21	1-164-156-11	s	CERAMIC 0.1uF 25V
C22	1-164-156-11	s	CERAMIC 0.1uF 25V
C23	1-164-156-11	s	CERAMIC 0.1uF 25V
C24	1-164-156-11	s	CERAMIC 0.1uF 25V
C25	1-164-156-11	s	CERAMIC 0.1uF 25V
C50	1-135-070-00	s	TANTALUM, CHIP 0.1uF 10% 35V
C51	1-107-420-11	s	ELECT 47uF 20% 35V
C52	1-107-420-11	s	ELECT 47uF 20% 35V
C53	1-164-156-11	s	CERAMIC 0.1uF 25V
C54	1-135-213-21	s	TANTALUM, CHIP 3.3uF 20% 25V
C55	1-135-213-21	s	TANTALUM, CHIP 3.3uF 20% 25V
C56	1-107-420-11	s	ELECT 47uF 20% 35V
C57	1-107-420-11	s	ELECT 47uF 20% 35V
C58	1-164-156-11	s	CERAMIC 0.1uF 25V
C59	1-135-213-21	s	TANTALUM, CHIP 3.3uF 20% 25V
C60	1-135-213-21	s	TANTALUM, CHIP 3.3uF 20% 25V
C61	1-164-156-11	s	CERAMIC 0.1uF 25V
C63	1-164-156-11	s	CERAMIC 0.1uF 25V
C64	1-164-156-11	s	CERAMIC 0.1uF 25V
C65	1-110-398-11	s	CHIP, TANTALUM 15uF 20% 35V
C67	1-164-156-11	s	CERAMIC 0.1uF 25V
C68	1-164-156-11	s	CERAMIC 0.1uF 25V
C69	1-164-156-11	s	CERAMIC 0.1uF 25V
C70	1-164-156-11	s	CERAMIC 0.1uF 25V
C71	1-164-156-11	s	CERAMIC 0.1uF 25V
C72	1-164-156-11	s	CERAMIC 0.1uF 25V
C73	1-164-156-11	s	CERAMIC 0.1uF 25V
C74	1-164-156-11	s	CERAMIC 0.1uF 25V
C75	1-164-156-11	s	CERAMIC 0.1uF 25V
C76	1-164-156-11	s	CERAMIC 0.1uF 25V
C77	1-164-156-11	s	CERAMIC 0.1uF 25V
CN1	1-568-801-11	s	CONNECTOR, FPC (ZIF) 24P
CN2	1-764-091-11	o	PIN, CONNECTOR (PC BOARD) 6P
CN3	1-764-097-11	o	PIN, CONNECTOR (PC BOARD) 12P
CN4	1-691-845-11	o	CONNECTOR, BOARD TO BOARD 50P
D1	8-719-059-52	s	DIODE MA3J14300LSO
D2	8-719-059-52	s	DIODE MA3J14300LSO
D3	8-719-059-52	s	DIODE MA3J14300LSO
D4	8-719-059-52	s	DIODE MA3J14300LSO
D5	8-719-059-52	s	DIODE MA3J14300LSO

(AT-104 BOARD)

Ref. No. or Q'ty	Part No.	SP	Description
D6	8-719-024-81	s	DIODE 1SS300-TE85L
D8	8-719-024-81	s	DIODE 1SS300-TE85L
D10	8-719-024-81	s	DIODE 1SS300-TE85L
D12	8-719-024-81	s	DIODE 1SS300-TE85L
D14	8-719-059-52	s	DIODE MA3J14300LSO
D15	8-719-037-24	s	DIODE RD12SB3-T1
D20	8-719-059-52	s	DIODE MA3J14300LSO
D21	8-719-059-52	s	DIODE MA3J14300LSO
D22	8-719-059-52	s	DIODE MA3J14300LSO
D23	8-719-059-52	s	DIODE MA3J14300LSO
D24	8-719-059-52	s	DIODE MA3J14300LSO
D25	8-719-059-52	s	DIODE MA3J14300LSO
D26	8-719-059-52	s	DIODE MA3J14300LSO
D27	8-719-059-52	s	DIODE MA3J14300LSO
D28	8-719-820-41	s	DIODE 1SS302
D29	8-719-820-41	s	DIODE 1SS302
D30	8-719-059-52	s	DIODE MA3J14300LSO
D31	8-719-059-52	s	DIODE MA3J14300LSO
IC5	8-759-926-66	s	IC SN74HC373ANS
IC6	8-759-973-71	s	IC TL7705CPS-B
IC7	8-759-173-16	s	IC TL062CPW
IC8	8-759-274-67	s	IC LM4040BIM3X-5.0
IC9		o	PENDING
IC11	8-759-149-10	s	IC UPD4702G
L1	1-410-381-11	s	INDUCTOR CHIP 10uH
L3	1-410-381-11	s	INDUCTOR CHIP 10uH
L4	1-410-381-11	s	INDUCTOR CHIP 10uH
L5	1-410-381-11	s	INDUCTOR CHIP 10uH
L6	1-410-381-11	s	INDUCTOR CHIP 10uH
L7	1-410-381-11	s	INDUCTOR CHIP 10uH
Q1	8-729-101-07	s	TRANSISTOR 2SB798
Q2	8-729-117-16	s	TRANSISTOR 2SA1611-M6
Q3	8-729-101-07	s	TRANSISTOR 2SB798
Q4	8-729-029-14	s	TRANSISTOR DTC144EUA-T106
Q5	8-729-117-16	s	TRANSISTOR 2SA1611-M6
Q6	8-729-101-07	s	TRANSISTOR 2SB798
Q7	8-729-029-14	s	TRANSISTOR DTC144EUA-T106
Q8	8-729-807-51	s	TRANSISTOR 2SD1623-S
R1	1-218-692-11	s	CHIP, METAL 1K 0.50% 1/16W
R2	1-218-692-11	s	CHIP, METAL 1K 0.50% 1/16W
R3	1-218-692-11	s	CHIP, METAL 1K 0.50% 1/16W
R4	1-218-692-11	s	CHIP, METAL 1K 0.50% 1/16W
R5	1-218-692-11	s	CHIP, METAL 1K 0.50% 1/16W
R10	1-218-668-11	s	CHIP, METAL 100 0.50% 1/16W
R11	1-218-692-11	s	CHIP, METAL 1K 0.50% 1/16W
R12	1-218-716-11	s	METAL 10K 0.50% 1/16W
R13	1-216-681-11	s	METAL, CHIP 18K 0.5% 1/10W
R14	1-218-708-11	s	METAL 4.7K 0.50% 1/16W
R15	1-218-732-11	s	METAL 47K 0.50% 1/16W
R16	1-218-692-11	s	CHIP, METAL 1K 0.50% 1/16W
R17	1-218-676-11	s	METAL 220 0.50% 1/16W
R18	1-218-692-11	s	CHIP, METAL 1K 0.50% 1/16W
R19	1-216-853-11	s	METAL, CHIP 470K 5% 1/16W
R20	1-216-853-11	s	METAL, CHIP 470K 5% 1/16W
R21	1-216-853-11	s	METAL, CHIP 470K 5% 1/16W
R22	1-216-853-11	s	METAL, CHIP 470K 5% 1/16W
R23	1-216-853-11	s	METAL, CHIP 470K 5% 1/16W

(AT-104 BOARD)

Ref. No. or Q'ty	Part No.	SP	Description
R24	1-216-853-11	s	METAL, CHIP 470K 5% 1/16W
R25	1-218-716-11	s	METAL 10K 0.50% 1/16W
R26	1-216-853-11	s	METAL, CHIP 470K 5% 1/16W
R27	1-216-853-11	s	METAL, CHIP 470K 5% 1/16W
R28	1-218-716-11	s	METAL 10K 0.50% 1/16W
R29	1-218-720-11	s	METAL 15K 0.50% 1/16W
R30	1-218-740-11	s	METAL 100K 0.50% 1/16W
R31	1-218-740-11	s	METAL 100K 0.50% 1/16W
R32	1-218-712-11	s	CHIP, METAL 6.8K 0.50% 1/16W
R50	1-216-649-11	s	CHIP, METAL 820 0.50% 1/10W
R51	1-218-606-11	s	CHIP, METAL 2.2 5% 1W
R52	1-216-619-11	s	CHIP, METAL 47 0.50% 1/10W
R53	1-216-667-11	s	METAL, CHIP 4.7K 0.5% 1/10W
R54	1-216-649-11	s	CHIP, METAL 820 0.50% 1/10W
R55	1-218-606-11	s	CHIP, METAL 2.2 5% 1W
R56	1-216-619-11	s	CHIP, METAL 47 0.50% 1/10W
R57	1-216-667-11	s	METAL, CHIP 4.7K 0.5% 1/10W
R59	1-218-676-11	s	METAL 220 0.50% 1/16W
R60	1-218-676-11	s	METAL 220 0.50% 1/16W
R61	1-218-676-11	s	METAL 220 0.50% 1/16W
R62	1-218-676-11	s	METAL 220 0.50% 1/16W
R63	1-218-676-11	s	METAL 220 0.50% 1/16W
R64	1-218-676-11	s	METAL 220 0.50% 1/16W
R65	1-218-676-11	s	METAL 220 0.50% 1/16W
R66	1-218-676-11	s	METAL 220 0.50% 1/16W
R67	1-218-716-11	s	METAL 10K 0.50% 1/16W
R68	1-218-728-11	s	METAL 33K 0.50% 1/16W
R69	1-218-728-11	s	METAL 33K 0.50% 1/16W
R70	1-216-853-11	s	METAL, CHIP 470K 5% 1/16W
R71	1-216-853-11	s	METAL, CHIP 470K 5% 1/16W
R72	1-216-853-11	s	METAL, CHIP 470K 5% 1/16W
R73	1-216-853-11	s	METAL, CHIP 470K 5% 1/16W
R74	1-218-716-11	s	METAL 10K 0.50% 1/16W
R75	1-216-295-11	s	CHIP, CONDUCTOR 0
R76	1-218-728-11	s	METAL 33K 0.50% 1/16W
R77	1-218-728-11	s	METAL 33K 0.50% 1/16W
R78	1-216-853-11	s	METAL, CHIP 470K 5% 1/16W
R79	1-216-853-11	s	METAL, CHIP 470K 5% 1/16W
R80	1-216-853-11	s	METAL, CHIP 470K 5% 1/16W
R81	1-216-853-11	s	METAL, CHIP 470K 5% 1/16W
R82	1-218-692-11	s	CHIP, METAL 1K 0.50% 1/16W
R83	1-218-692-11	s	CHIP, METAL 1K 0.50% 1/16W
RB3	1-239-416-11	s	RESISTOR BLOCK, CHIP 220X4
RB4	1-239-308-11	s	RESISTOR BLOCK, CHIP 47KX8
RB5	1-239-416-11	s	RESISTOR BLOCK, CHIP 220X4
RB6	1-239-416-11	s	RESISTOR BLOCK, CHIP 220X4
RB7	1-239-389-11	s	RESISTOR BLOCK, CHIP 47KX4
RB8	1-239-416-11	s	RESISTOR BLOCK, CHIP 220X4
RB10	1-239-308-11	s	RESISTOR BLOCK, CHIP 47KX8
RB11	1-239-308-11	s	RESISTOR BLOCK, CHIP 47KX8
RB12	1-236-904-11	s	RESISTOR BLOCK, CHIP 1KX4
RB13	1-236-904-11	s	RESISTOR BLOCK, CHIP 1KX4
RB14	1-239-308-11	s	RESISTOR BLOCK, CHIP 47KX8
RB15	1-239-308-11	s	RESISTOR BLOCK, CHIP 47KX8
RB16	1-239-389-11	s	RESISTOR BLOCK, CHIP 47KX4
RB17	1-239-416-11	s	RESISTOR BLOCK, CHIP 220X4
RB18	1-236-904-11	s	RESISTOR BLOCK, CHIP 1KX4
RB19	1-236-904-11	s	RESISTOR BLOCK, CHIP 1KX4

(AT-104 BOARD)

Ref. No. or Q'ty	Part No.	SP	Description
RB20	1-239-436-11	s	RESISTOR BLOCK, CHIP 33KX4
RB21	1-239-308-11	s	RESISTOR BLOCK, CHIP 47KX8
RV1	1-241-265-11	s	RES, ADJ, METAL 20K
S1	1-553-572-00	s	SWITCH, DIP 4-CKT
X1	1-760-435-11	s	CRYSTAL 18.00MHz

http://getMANUAL.com

AU-203 BOARD

Ref. No. or Q'ty	Part No.	SP	Description
1pc	A-8273-132-A	o	MOUNTED CIRCUIT BOARD, AU-203
1pc	3-602-439-03	o	PANEL,AU-203 PC BOARD
1pc	3-724-753-01	o	RING
6pcs	3-729-061-01	s	SCREW (M2X4.5) (TYPE 1)
C3	1-162-970-11	s	CERAMIC, CHIP 0.01uF 10% 25V
C6	1-162-970-11	s	CERAMIC, CHIP 0.01uF 10% 25V
C7	1-126-404-11	s	CHIP,ELECT 4.7uF 20% 50V
C8	1-113-682-11	s	TANTALUM, CHIP 33uF 20% 10V
C9	1-113-682-11	s	TANTALUM, CHIP 33uF 20% 10V
C10	1-162-964-11	s	CERAMIC 0.001uF 10% 50V
C11	1-164-156-11	s	CERAMIC 0.1uF 25V
C12	1-162-927-11	s	CERAMIC, CHIP 100PF 5% 50V
C13	1-162-927-11	s	CERAMIC, CHIP 100PF 5% 50V
C14	1-162-964-11	s	CERAMIC 0.001uF 10% 50V
C15	1-126-404-11	s	CHIP,ELECT 4.7uF 20% 50V
C16	1-128-594-11	s	ELECT, NONPOLAR 1uF 20% 50V
C17	1-128-594-11	s	ELECT, NONPOLAR 1uF 20% 50V
C18	1-126-404-11	s	CHIP,ELECT 4.7uF 20% 50V
C19	1-110-501-11	s	CERAMIC 0.33uF 10% 16V
C20	1-110-501-11	s	CERAMIC 0.33uF 10% 16V
C21	1-110-501-11	s	CERAMIC 0.33uF 10% 16V
C22	1-110-501-11	s	CERAMIC 0.33uF 10% 16V
C23	1-128-405-11	s	ELECT 22uF 20% 50V
C24	1-162-927-11	s	CERAMIC, CHIP 100PF 5% 50V
C25	1-162-927-11	s	CERAMIC, CHIP 100PF 5% 50V
C26	1-164-156-11	s	CERAMIC 0.1uF 25V
C27	1-107-686-11	s	CHIP, TANTALUM 4.7uF 20% 16V
C28	1-162-964-11	s	CERAMIC 0.001uF 10% 50V
C29	1-162-964-11	s	CERAMIC 0.001uF 10% 50V
C30	1-162-964-11	s	CERAMIC 0.001uF 10% 50V
C31	1-162-964-11	s	CERAMIC 0.001uF 10% 50V
C32	1-128-453-21	s	ELECT 47uF 20% 6.3V
C33	1-128-453-21	s	ELECT 47uF 20% 6.3V
C34	1-128-594-11	s	ELECT, NONPOLAR 1uF 20% 50V
C35	1-128-594-11	s	ELECT, NONPOLAR 1uF 20% 50V
C36	1-128-594-11	s	ELECT, NONPOLAR 1uF 20% 50V
C37	1-128-594-11	s	ELECT, NONPOLAR 1uF 20% 50V
C38	1-128-405-11	s	ELECT 22uF 20% 50V
C39	1-128-405-11	s	ELECT 22uF 20% 50V
C40	1-104-852-11	s	TANTALUM, CHIP 22uF 20% 10V
C41	1-104-852-11	s	TANTALUM, CHIP 22uF 20% 10V
C42	1-104-852-11	s	TANTALUM, CHIP 22uF 20% 10V
C43	1-104-852-11	s	TANTALUM, CHIP 22uF 20% 10V
C44	1-165-128-11	s	CERAMIC 0.22uF 16V
C45	1-165-128-11	s	CERAMIC 0.22uF 16V
C46	1-164-156-11	s	CERAMIC 0.1uF 25V
C47	1-162-928-11	s	CERAMIC 120PF 5% 50V
C48	1-162-928-11	s	CERAMIC 120PF 5% 50V
C49	1-162-927-11	s	CERAMIC, CHIP 100PF 5% 50V
C50	1-162-927-11	s	CERAMIC, CHIP 100PF 5% 50V
C51	1-164-156-11	s	CERAMIC 0.1uF 25V
C52	1-164-156-11	s	CERAMIC 0.1uF 25V
C53	1-162-927-11	s	CERAMIC, CHIP 100PF 5% 50V
C54	1-128-453-21	s	ELECT 47uF 20% 6.3V
C55	1-128-453-21	s	ELECT 47uF 20% 6.3V
C56	1-104-852-11	s	TANTALUM, CHIP 22uF 20% 10V
C57	1-104-852-11	s	TANTALUM, CHIP 22uF 20% 10V
C58	1-104-852-11	s	TANTALUM, CHIP 22uF 20% 10V
C59	1-104-852-11	s	TANTALUM, CHIP 22uF 20% 10V

(AU-203 BOARD)

Ref. No. or Q'ty	Part No.	SP	Description
C60	1-162-927-11	s	CERAMIC, CHIP 100PF 5% 50V
C61	1-162-928-11	s	CERAMIC 120PF 5% 50V
C62	1-162-928-11	s	CERAMIC 120PF 5% 50V
C63	1-162-928-11	s	CERAMIC 120PF 5% 50V
C64	1-162-928-11	s	CERAMIC 120PF 5% 50V
C67	1-135-210-11	s	TANTALUM 4.7uF 10% 10V
C71	1-162-927-11	s	CERAMIC, CHIP 100PF 5% 50V
C72	1-162-927-11	s	CERAMIC, CHIP 100PF 5% 50V
C73	1-104-823-11	s	TANTALUM, CHIP 47uF 20% 16V
C74	1-107-686-11	s	CHIP, TANTALUM 4.7uF 20% 16V
C75	1-107-686-11	s	CHIP, TANTALUM 4.7uF 20% 16V
C76	1-104-852-11	s	TANTALUM, CHIP 22uF 20% 10V
C77	1-107-686-11	s	CHIP, TANTALUM 4.7uF 20% 16V
C78	1-107-686-11	s	CHIP, TANTALUM 4.7uF 20% 16V
C79	1-162-927-11	s	CERAMIC, CHIP 100PF 5% 50V
C80	1-162-927-11	s	CERAMIC, CHIP 100PF 5% 50V
C81	1-165-128-11	s	CERAMIC 0.22uF 16V
C82	1-165-128-11	s	CERAMIC 0.22uF 16V
C83	1-135-177-21	s	TANTALUM, CHIP 1uF 10% 25V
C84	1-135-177-21	s	TANTALUM, CHIP 1uF 10% 25V
C85	1-165-128-11	s	CERAMIC 0.22uF 16V
C86	1-165-128-11	s	CERAMIC 0.22uF 16V
C87	1-164-156-11	s	CERAMIC 0.1uF 25V
C88	1-164-156-11	s	CERAMIC 0.1uF 25V
C89	1-104-852-11	s	TANTALUM, CHIP 22uF 20% 10V
C90	1-104-852-11	s	TANTALUM, CHIP 22uF 20% 10V
C92	1-162-959-11	s	CERAMIC 330PF 5% 50V
C93	1-104-823-11	s	TANTALUM, CHIP 47uF 20% 16V
C94	1-104-823-11	s	TANTALUM, CHIP 47uF 20% 16V
C95	1-162-927-11	s	CERAMIC, CHIP 100PF 5% 50V
C96	1-162-927-11	s	CERAMIC, CHIP 100PF 5% 50V
C97	1-135-177-21	s	TANTALUM, CHIP 1uF 10% 25V
C98	1-135-177-21	s	TANTALUM, CHIP 1uF 10% 25V
C99	1-107-686-11	s	CHIP, TANTALUM 4.7uF 20% 16V
C100	1-165-128-11	s	CERAMIC 0.22uF 16V
C101	1-164-156-11	s	CERAMIC 0.1uF 25V
C102	1-107-686-11	s	CHIP, TANTALUM 4.7uF 20% 16V
C103	1-164-156-11	s	CERAMIC 0.1uF 25V
C104	1-107-686-11	s	CHIP, TANTALUM 4.7uF 20% 16V
C105	1-104-852-11	s	TANTALUM, CHIP 22uF 20% 10V
C106	1-164-156-11	s	CERAMIC 0.1uF 25V
C107	1-104-852-11	s	TANTALUM, CHIP 22uF 20% 10V
C108	1-162-963-11	s	CERAMIC, CHIP 680PF 10% 50V
C109	1-162-963-11	s	CERAMIC, CHIP 680PF 10% 50V
C110	1-162-963-11	s	CERAMIC, CHIP 680PF 10% 50V
C111	1-107-686-11	s	CHIP, TANTALUM 4.7uF 20% 16V
C112	1-104-852-11	s	TANTALUM, CHIP 22uF 20% 10V
C115	1-162-963-11	s	CERAMIC, CHIP 680PF 10% 50V
C118	1-162-959-11	s	CERAMIC 330PF 5% 50V
C119	1-128-391-11	s	ELECT 330uF 20% 6.3V
C120	1-164-156-11	s	CERAMIC 0.1uF 25V
C121	1-104-852-11	s	TANTALUM, CHIP 22uF 20% 10V
C122	1-104-852-11	s	TANTALUM, CHIP 22uF 20% 10V
C123	1-104-851-11	s	TANTALUM, CHIP 10uF 20% 10V
C127	1-104-852-11	s	TANTALUM, CHIP 22uF 20% 10V
C128	1-104-852-11	s	TANTALUM, CHIP 22uF 20% 10V
C129	1-104-852-11	s	TANTALUM, CHIP 22uF 20% 10V
C130	1-104-852-11	s	TANTALUM, CHIP 22uF 20% 10V
C131	1-162-957-11	s	CERAMIC 220PF 5% 50V

(AU-203 BOARD)

Ref. No. or Q'ty	Part No.	SP	Description
C132	1-104-852-11	s	TANTALUM, CHIP 22uF 20% 10V
C133	1-104-852-11	s	TANTALUM, CHIP 22uF 20% 10V
C134	1-104-852-11	s	TANTALUM, CHIP 22uF 20% 10V
C135	1-104-852-11	s	TANTALUM, CHIP 22uF 20% 10V
C138	1-165-128-11	s	CERAMIC 0.22uF 16V
C150	1-104-823-11	s	TANTALUM, CHIP 47uF 20% 16V
C152	1-104-823-11	s	TANTALUM, CHIP 47uF 20% 16V
C160	1-165-128-11	s	CERAMIC 0.22uF 16V
C161	1-104-851-11	s	TANTALUM, CHIP 10uF 20% 10V
C162	1-107-686-11	s	CHIP, TANTALUM 4.7uF 20% 16V
C163	1-165-128-11	s	CERAMIC 0.22uF 16V
C164	1-165-128-11	s	CERAMIC 0.22uF 16V
C200	1-164-156-11	s	CERAMIC 0.1uF 25V
C201	1-128-453-21	s	ELECT 47uF 20% 6.3V
C202	1-128-453-21	s	ELECT 47uF 20% 6.3V
C203	1-128-453-21	s	ELECT 47uF 20% 6.3V
C204	1-128-404-11	s	ELECT, CHIP 100uF 20% 35V
C205	1-104-851-11	s	TANTALUM, CHIP 10uF 20% 10V
C206	1-104-852-11	s	TANTALUM, CHIP 22uF 20% 10V
C207	1-164-156-11	s	CERAMIC 0.1uF 25V
C208	1-128-404-11	s	ELECT, CHIP 100uF 20% 35V
C209	1-128-453-21	s	ELECT 47uF 20% 6.3V
D1	8-719-029-76	s	DIODE RD13UJN-T1
D2	8-719-820-41	s	DIODE 1SS302
D3	8-719-404-35	s	DIODE MA141WK
D4	8-719-024-81	s	DIODE 1SS300-TE85L
D5	8-719-404-35	s	DIODE MA141WK
D6	8-719-024-81	s	DIODE 1SS300-TE85L
D7	8-719-404-35	s	DIODE MA141WK
D8	8-719-024-81	s	DIODE 1SS300-TE85L
D9	8-719-024-81	s	DIODE 1SS300-TE85L
D10	8-719-024-81	s	DIODE 1SS300-TE85L
D11	8-719-024-81	s	DIODE 1SS300-TE85L
D12	8-719-024-81	s	DIODE 1SS300-TE85L
D13	8-719-024-81	s	DIODE 1SS300-TE85L
D14	8-719-024-81	s	DIODE 1SS300-TE85L
D15	8-719-024-81	s	DIODE 1SS300-TE85L
D16	8-719-024-81	s	DIODE 1SS300-TE85L
D17	8-719-024-81	s	DIODE 1SS300-TE85L
D18	8-719-024-81	s	DIODE 1SS300-TE85L
D19	8-719-989-76	s	DIODE SC802-04
D20	8-719-989-76	s	DIODE SC802-04
D21	8-719-029-71	s	DIODE RD8.2UJN-T1
D22	8-719-024-81	s	DIODE 1SS300-TE85L
D23	8-719-989-76	s	DIODE SC802-04
D24	8-719-989-76	s	DIODE SC802-04
D25	8-719-989-76	s	DIODE SC802-04
D26	8-719-989-76	s	DIODE SC802-04
D27	8-719-029-57	s	DIODE RD2.4UH-T1
D28	8-719-029-57	s	DIODE RD2.4UH-T1
D40	8-719-820-41	s	DIODE 1SS302
IC1	8-759-058-62	s	IC TC7S08FU(TE85R)
IC2	8-759-147-84	s	IC CXD8072Q
IC3	8-759-049-55	s	IC SN74HC00APW-E20
IC4	8-759-278-58	s	IC NJM4558V-TE2
IC5	8-759-278-58	s	IC NJM4558V-TE2
IC6	8-759-049-55	s	IC SN74HC00APW-E20
IC7	8-759-075-68	s	IC TC4066BFS

(AU-203 BOARD)

Ref. No. or Q'ty	Part No.	SP	Description
IC8	8-759-075-68	s	IC TC4066BFS
IC9	8-759-082-61	s	IC TC4W53FU
IC10	8-759-082-61	s	IC TC4W53FU
IC11	8-759-173-16	s	IC TL062CPW
IC12	8-759-173-16	s	IC TL062CPW
IC13	8-759-635-27	s	IC M62352GP
IC14	8-759-082-61	s	IC TC4W53FU
IC15	8-759-082-61	s	IC TC4W53FU
IC16	8-759-278-58	s	IC NJM4558V-TE2
IC17	8-759-086-41	s	IC X24C02S-3.0
IC18	8-759-278-58	s	IC NJM4558V-TE2
IC19	8-759-278-58	s	IC NJM4558V-TE2
IC20	8-759-278-58	s	IC NJM4558V-TE2
IC21	8-759-076-06	s	IC TL064CPW
IC22	8-759-076-06	s	IC TL064CPW
IC23	8-759-076-06	s	IC TL064CPW
IC24	8-759-381-64	s	IC M5282FP-70CD
IC25	8-759-173-16	s	IC TL062CPW
IC26	8-759-082-61	s	IC TC4W53FU
IC27	8-759-082-61	s	IC TC4W53FU
IC28	8-759-076-06	s	IC TL064CPW
IC29	8-759-634-16	s	IC M5207L01
IC30	8-759-634-16	s	IC M5207L01
IC31	8-759-082-61	s	IC TC4W53FU
IC32	8-759-185-42	s	IC LM4040AIM3-2.5
IC33	8-759-349-19	s	IC NJM3414AM-TE2
IC34	8-759-082-61	s	IC TC4W53FU
IC35	8-759-973-71	s	IC TL7705CPS-B
IC40	8-759-082-61	s	IC TC4W53FU
IC41	8-759-082-61	s	IC TC4W53FU
IC42	8-759-082-61	s	IC TC4W53FU
IC43	8-759-082-61	s	IC TC4W53FU
IC44	8-759-173-16	s	IC TL062CPW
IC45	8-759-173-16	s	IC TL062CPW
IC46	8-759-349-19	s	IC NJM3414AM-TE2
IC47	8-759-349-19	s	IC NJM3414AM-TE2
IC48	8-759-349-19	s	IC NJM3414AM-TE2
IC49	8-759-349-19	s	IC NJM3414AM-TE2
IC50	8-759-349-19	s	IC NJM3414AM-TE2
IC51	8-759-173-16	s	IC TL062CPW
IC60	8-759-058-55	s	IC TC7S02FU-TE85L
L1	1-410-385-11	s	INDUCTOR, CHIP 22uH
Q1	8-729-021-63	s	TRANSISTOR 2SA1766-TD
Q2	8-729-928-87	s	TRANSISTOR DTC124EE
Q3	8-729-117-32	s	TRANSISTOR 2SC4177
Q4	8-729-117-32	s	TRANSISTOR 2SC4177
Q5	8-729-928-87	s	TRANSISTOR DTC124EE
Q6	8-729-021-63	s	TRANSISTOR 2SA1766-TD
Q7	8-729-117-32	s	TRANSISTOR 2SC4177
Q8	8-729-021-63	s	TRANSISTOR 2SA1766-TD
Q9	8-729-141-75	s	TRANSISTOR 2SD596DV345
Q10	8-729-928-87	s	TRANSISTOR DTC124EE
Q11	8-729-119-04	s	TRANSISTOR 2SC3115
Q12	8-729-119-04	s	TRANSISTOR 2SC3115
Q13	8-729-117-16	s	TRANSISTOR 2SA1611-M6
Q14	8-729-117-32	s	TRANSISTOR 2SC4177
Q15	8-729-119-04	s	TRANSISTOR 2SC3115

(AU-203 BOARD)

Ref. No. or Q'ty	Part No.	SP	Description
Q16	8-729-119-04	s	TRANSISTOR 2SC3115
Q17	8-729-119-04	s	TRANSISTOR 2SC3115
Q18	8-729-026-32	s	TRANSISTOR XP6534
Q19	8-729-119-04	s	TRANSISTOR 2SC3115
Q20	8-729-026-32	s	TRANSISTOR XP6534
Q21	8-729-118-58	s	TRANSISTOR 2SK852-X4
Q22	8-729-118-58	s	TRANSISTOR 2SK852-X4
Q23	8-729-118-58	s	TRANSISTOR 2SK852-X4
Q24	8-729-118-58	s	TRANSISTOR 2SK852-X4
Q25	8-729-118-58	s	TRANSISTOR 2SK852-X4
Q26	8-729-118-58	s	TRANSISTOR 2SK852-X4
Q27	8-729-118-58	s	TRANSISTOR 2SK852-X4
Q28	8-729-118-58	s	TRANSISTOR 2SK852-X4
Q29	8-729-118-58	s	TRANSISTOR 2SK852-X4
Q30	8-729-118-58	s	TRANSISTOR 2SK852-X4
Q31	8-729-119-04	s	TRANSISTOR 2SC3115
Q32	8-729-119-04	s	TRANSISTOR 2SC3115
Q33	8-729-807-51	s	TRANSISTOR 2SD1623-S
Q34	8-729-820-86	s	TRANSISTOR 2SB1121-ST
Q35	8-729-820-90	s	TRANSISTOR 2SD1621-ST
Q36	8-729-143-14	s	TRANSISTOR 2SC4176-B35
Q37	8-729-143-07	s	TRANSISTOR 2SA1610-Y33
Q38	8-729-820-86	s	TRANSISTOR 2SB1121-ST
Q39	8-729-820-90	s	TRANSISTOR 2SD1621-ST
Q40	8-729-143-14	s	TRANSISTOR 2SC4176-B35
Q41	8-729-143-07	s	TRANSISTOR 2SA1610-Y33
Q42	8-729-117-32	s	TRANSISTOR 2SC4177
Q43	8-729-928-87	s	TRANSISTOR DTC124EE
Q44	8-729-928-87	s	TRANSISTOR DTC124EE
Q45	8-729-928-87	s	TRANSISTOR DTC124EE
Q46	8-729-928-87	s	TRANSISTOR DTC124EE
Q50	8-729-928-87	s	TRANSISTOR DTC124EE
Q51	8-729-117-16	s	TRANSISTOR 2SA1611-M6
Q52	8-729-117-32	s	TRANSISTOR 2SC4177
R1	1-218-644-11	s	METAL 10 0.50% 1/16W
R2	1-218-732-11	s	METAL 47K 0.50% 1/16W
R3	1-218-732-11	s	METAL 47K 0.50% 1/16W
R4	1-218-668-11	s	CHIP, METAL 100 0.50% 1/16W
R5	1-218-668-11	s	CHIP, METAL 100 0.50% 1/16W
R6	1-218-668-11	s	CHIP, METAL 100 0.50% 1/16W
R7	1-218-728-11	s	METAL 33K 0.50% 1/16W
R8	1-218-728-11	s	METAL 33K 0.50% 1/16W
R9	1-218-728-11	s	METAL 33K 0.50% 1/16W
R10	1-218-728-11	s	METAL 33K 0.50% 1/16W
R11	1-218-668-11	s	CHIP, METAL 100 0.50% 1/16W
R12	1-218-668-11	s	CHIP, METAL 100 0.50% 1/16W
R13	1-218-668-11	s	CHIP, METAL 100 0.50% 1/16W
R14	1-218-700-11	s	METAL 2.2K 0.50% 1/16W
R15	1-218-732-11	s	METAL 47K 0.50% 1/16W
R16	1-218-644-11	s	METAL 10 0.50% 1/16W
R17	1-218-700-11	s	METAL 2.2K 0.50% 1/16W
R18	1-218-732-11	s	METAL 47K 0.50% 1/16W
R19	1-218-668-11	s	CHIP, METAL 100 0.50% 1/16W
R20	1-218-668-11	s	CHIP, METAL 100 0.50% 1/16W
R21	1-218-724-11	s	CHIP, METAL 22K 5% 1/16W
R22	1-218-724-11	s	CHIP, METAL 22K 5% 1/16W
R23	1-218-732-11	s	METAL 47K 0.50% 1/16W
R24	1-218-724-11	s	CHIP, METAL 22K 5% 1/16W
R25	1-218-644-11	s	METAL 10 0.50% 1/16W

(AU-203 BOARD)

Ref. No. or Q'ty	Part No.	SP	Description
R26	1-218-690-11	s	CHIP, METAL 820 0.50% 1/16W
R27	1-218-740-11	s	METAL 100K 0.50% 1/16W
R28	1-218-644-11	s	METAL 10 0.50% 1/16W
R29	1-218-690-11	s	CHIP, METAL 820 0.50% 1/16W
R30	1-218-740-11	s	METAL 100K 0.50% 1/16W
R31	1-218-752-11	s	METAL 330K 0.50% 1/16W
R32	1-216-853-11	s	METAL, CHIP 470K 5% 1/16W
R33	1-218-724-11	s	CHIP, METAL 22K 5% 1/16W
R34	1-218-724-11	s	CHIP, METAL 22K 5% 1/16W
R35	1-218-644-11	s	METAL 10 0.50% 1/16W
R36	1-218-732-11	s	METAL 47K 0.50% 1/16W
R37	1-218-676-11	s	METAL 220 0.50% 1/16W
R38	1-218-676-11	s	METAL 220 0.50% 1/16W
R39	1-218-752-11	s	METAL 330K 0.50% 1/16W
R40	1-218-732-11	s	METAL 47K 0.50% 1/16W
R41	1-218-692-11	s	CHIP, METAL 1K 0.50% 1/16W
R42	1-218-732-11	s	METAL 47K 0.50% 1/16W
R43	1-218-732-11	s	METAL 47K 0.50% 1/16W
R44	1-218-668-11	s	CHIP, METAL 100 0.50% 1/16W
R45	1-218-740-11	s	METAL 100K 0.50% 1/16W
R46	1-218-740-11	s	METAL 100K 0.50% 1/16W
R47	1-218-644-11	s	METAL 10 0.50% 1/16W
R48	1-218-704-11	s	METAL 3.3K 0.50% 1/16W
R49	1-218-704-11	s	METAL 3.3K 0.50% 1/16W
R50	1-218-716-11	s	METAL 10K 0.50% 1/16W
R51	1-218-716-11	s	METAL 10K 0.50% 1/16W
R52	1-218-724-11	s	CHIP, METAL 22K 5% 1/16W
R53	1-218-668-11	s	CHIP, METAL 100 0.50% 1/16W
R54	1-218-708-11	s	METAL 4.7K 0.50% 1/16W
R55	1-218-708-11	s	METAL 4.7K 0.50% 1/16W
R56	1-218-708-11	s	METAL 4.7K 0.50% 1/16W
R57	1-218-708-11	s	METAL 4.7K 0.50% 1/16W
R58	1-218-644-11	s	METAL 10 0.50% 1/16W
R59	1-218-644-11	s	METAL 10 0.50% 1/16W
R60	1-218-724-11	s	CHIP, METAL 22K 5% 1/16W
R61	1-218-644-11	s	METAL 10 0.50% 1/16W
R62	1-218-644-11	s	METAL 10 0.50% 1/16W
R63	1-218-724-11	s	CHIP, METAL 22K 5% 1/16W
R64	1-218-752-11	s	METAL 330K 0.50% 1/16W
R65	1-218-724-11	s	CHIP, METAL 22K 5% 1/16W
R66	1-218-724-11	s	CHIP, METAL 22K 5% 1/16W
R67	1-218-724-11	s	CHIP, METAL 22K 5% 1/16W
R68	1-218-668-11	s	CHIP, METAL 100 0.50% 1/16W
R69	1-218-711-11	s	METAL 6.2K 0.50% 1/16W
R70	1-218-675-11	s	CHIP, METAL 200 0.50% 1/16W
R71	1-218-682-11	s	METAL 390 0.50% 1/16W
R72	1-218-690-11	s	CHIP, METAL 820 0.50% 1/16W
R73	1-218-712-11	s	CHIP, METAL 6.8K 0.50% 1/16W
R74	1-218-711-11	s	METAL 6.2K 0.50% 1/16W
R75	1-218-675-11	s	CHIP, METAL 200 0.50% 1/16W
R76	1-218-682-11	s	METAL 390 0.50% 1/16W
R77	1-218-690-11	s	CHIP, METAL 820 0.50% 1/16W
R78	1-218-712-11	s	CHIP, METAL 6.8K 0.50% 1/16W
R79	1-218-724-11	s	CHIP, METAL 22K 5% 1/16W
R80	1-218-668-11	s	CHIP, METAL 100 0.50% 1/16W
R81	1-218-668-11	s	CHIP, METAL 100 0.50% 1/16W
R82	1-218-752-11	s	METAL 330K 0.50% 1/16W
R83	1-218-752-11	s	METAL 330K 0.50% 1/16W
R84	1-218-732-11	s	METAL 47K 0.50% 1/16W

(AU-203 BOARD)

Ref. No. or Q'ty	Part No.	SP	Description
R85	1-218-668-11	s	CHIP, METAL 100 0.50% 1/16W
R86	1-218-752-11	s	METAL 330K 0.50% 1/16W
R87	1-218-674-11	s	METAL 180 0.50% 1/16W
R88	1-218-674-11	s	METAL 180 0.50% 1/16W
R89	1-218-674-11	s	METAL 180 0.50% 1/16W
R90	1-218-711-11	s	METAL 6.2K 0.50% 1/16W
R91	1-218-712-11	s	CHIP, METAL 6.8K 0.50% 1/16W
R92	1-218-711-11	s	METAL 6.2K 0.50% 1/16W
R93	1-218-712-11	s	CHIP, METAL 6.8K 0.50% 1/16W
R94	1-218-724-11	s	CHIP, METAL 22K 5% 1/16W
R95	1-218-724-11	s	CHIP, METAL 22K 5% 1/16W
R96	1-218-674-11	s	METAL 180 0.50% 1/16W
R97	1-218-708-11	s	METAL 4.7K 0.50% 1/16W
R98	1-218-708-11	s	METAL 4.7K 0.50% 1/16W
R99	1-218-708-11	s	METAL 4.7K 0.50% 1/16W
R100	1-218-708-11	s	METAL 4.7K 0.50% 1/16W
R101	1-218-692-11	s	CHIP, METAL 1K 0.50% 1/16W
R102	1-218-692-11	s	CHIP, METAL 1K 0.50% 1/16W
R103	1-218-716-11	s	METAL 10K 0.50% 1/16W
R104	1-218-716-11	s	METAL 10K 0.50% 1/16W
R105	1-218-716-11	s	METAL 10K 0.50% 1/16W
R106	1-218-716-11	s	METAL 10K 0.50% 1/16W
R107	1-218-732-11	s	METAL 47K 0.50% 1/16W
R108	1-218-732-11	s	METAL 47K 0.50% 1/16W
R109	1-218-732-11	s	METAL 47K 0.50% 1/16W
R110	1-218-732-11	s	METAL 47K 0.50% 1/16W
R111	1-218-732-11	s	METAL 47K 0.50% 1/16W
R112	1-218-732-11	s	METAL 47K 0.50% 1/16W
R113	1-218-732-11	s	METAL 47K 0.50% 1/16W
R114	1-218-732-11	s	METAL 47K 0.50% 1/16W
R115	1-218-732-11	s	METAL 47K 0.50% 1/16W
R116	1-218-732-11	s	METAL 47K 0.50% 1/16W
R117	1-218-732-11	s	METAL 47K 0.50% 1/16W
R118	1-218-732-11	s	METAL 47K 0.50% 1/16W
R119	1-218-732-11	s	METAL 47K 0.50% 1/16W
R120	1-218-732-11	s	METAL 47K 0.50% 1/16W
R121	1-218-644-11	s	METAL 10 0.50% 1/16W
R122	1-218-644-11	s	METAL 10 0.50% 1/16W
R123	1-218-724-11	s	CHIP, METAL 22K 5% 1/16W
R124	1-218-724-11	s	CHIP, METAL 22K 5% 1/16W
R125	1-218-737-11	s	CHIP, METAL 75K 0.50% 1/16W
R126	1-218-737-11	s	CHIP, METAL 75K 0.50% 1/16W
R127	1-218-737-11	s	CHIP, METAL 75K 0.50% 1/16W
R128	1-216-853-11	s	METAL, CHIP 470K 5% 1/16W
R129	1-218-711-11	s	METAL 6.2K 0.50% 1/16W
R130	1-216-863-11	s	METAL 3.3M 5% 1/16W
R131	1-218-692-11	s	CHIP, METAL 1K 0.50% 1/16W
R132	1-218-711-11	s	METAL 6.2K 0.50% 1/16W
R133	1-216-863-11	s	METAL 3.3M 5% 1/16W
R134	1-216-863-11	s	METAL 3.3M 5% 1/16W
R135	1-216-863-11	s	METAL 3.3M 5% 1/16W
R136	1-216-863-11	s	METAL 3.3M 5% 1/16W
R137	1-218-692-11	s	CHIP, METAL 1K 0.50% 1/16W
R138	1-216-863-11	s	METAL 3.3M 5% 1/16W
R139	1-216-863-11	s	METAL 3.3M 5% 1/16W
R140	1-216-863-11	s	METAL 3.3M 5% 1/16W
R141	1-218-692-11	s	CHIP, METAL 1K 0.50% 1/16W
R142	1-218-692-11	s	CHIP, METAL 1K 0.50% 1/16W
R143	1-218-720-11	s	METAL 15K 0.50% 1/16W

(AU-203 BOARD)

Ref. No. or Q'ty	Part No.	SP	Description
R144	1-218-740-11	s	METAL 100K 0.50% 1/16W
R145	1-218-740-11	s	METAL 100K 0.50% 1/16W
R146	1-218-644-11	s	METAL 10 0.50% 1/16W
R147	1-218-644-11	s	METAL 10 0.50% 1/16W
R148	1-218-720-11	s	METAL 15K 0.50% 1/16W
R149	1-218-723-11	s	METAL 20K 0.50% 1/16W
R150	1-218-723-11	s	METAL 20K 0.50% 1/16W
R151	1-218-686-11	s	METAL 560 0.50% 1/16W
R152	1-218-697-11	s	METAL 1.6K 0.50% 1/16W
R153	1-218-710-11	s	CHIP, METAL 5.6K 0.50% 1/16W
R154	1-218-725-11	s	METAL 24K 0.50% 1/16W
R155	1-218-686-11	s	METAL 560 0.50% 1/16W
R156	1-218-697-11	s	METAL 1.6K 0.50% 1/16W
R157	1-218-710-11	s	CHIP, METAL 5.6K 0.50% 1/16W
R158	1-218-725-11	s	METAL 24K 0.50% 1/16W
R159	1-218-740-11	s	METAL 100K 0.50% 1/16W
R160	1-218-706-11	s	METAL 3.9K 0.50% 1/16W
R161	1-218-706-11	s	METAL 3.9K 0.50% 1/16W
R162	1-218-740-11	s	METAL 100K 0.50% 1/16W
R163	1-218-692-11	s	CHIP, METAL 1K 0.50% 1/16W
R164	1-218-692-11	s	CHIP, METAL 1K 0.50% 1/16W
R165	1-218-732-11	s	METAL 47K 0.50% 1/16W
R166	1-218-711-11	s	METAL 6.2K 0.50% 1/16W
R167	1-218-711-11	s	METAL 6.2K 0.50% 1/16W
R168	1-218-732-11	s	METAL 47K 0.50% 1/16W
R169	1-218-732-11	s	METAL 47K 0.50% 1/16W
R170	1-218-732-11	s	METAL 47K 0.50% 1/16W
R171	1-218-732-11	s	METAL 47K 0.50% 1/16W
R172	1-218-732-11	s	METAL 47K 0.50% 1/16W
R173	1-218-644-11	s	METAL 10 0.50% 1/16W
R174	1-218-644-11	s	METAL 10 0.50% 1/16W
R175	1-218-727-11	s	METAL 30K 0.50% 1/16W
R176	1-218-727-11	s	METAL 30K 0.50% 1/16W
R177	1-218-668-11	s	CHIP, METAL 100 0.50% 1/16W
R178	1-218-644-11	s	METAL 10 0.50% 1/16W
R179	1-218-644-11	s	METAL 10 0.50% 1/16W
R180	1-218-732-11	s	METAL 47K 0.50% 1/16W
R181	1-218-668-11	s	CHIP, METAL 100 0.50% 1/16W
R182	1-218-732-11	s	METAL 47K 0.50% 1/16W
R183	1-218-732-11	s	METAL 47K 0.50% 1/16W
R184	1-218-732-11	s	METAL 47K 0.50% 1/16W
R185	1-218-668-11	s	CHIP, METAL 100 0.50% 1/16W
R186	1-218-644-11	s	METAL 10 0.50% 1/16W
R187	1-218-668-11	s	CHIP, METAL 100 0.50% 1/16W
R188	1-218-732-11	s	METAL 47K 0.50% 1/16W
R189	1-218-644-11	s	METAL 10 0.50% 1/16W
R190	1-218-732-11	s	METAL 47K 0.50% 1/16W
R191	1-218-732-11	s	METAL 47K 0.50% 1/16W
R192	1-218-732-11	s	METAL 47K 0.50% 1/16W
R193	1-218-644-11	s	METAL 10 0.50% 1/16W
R194	1-218-644-11	s	METAL 10 0.50% 1/16W
R195	1-218-668-11	s	CHIP, METAL 100 0.50% 1/16W
R196	1-218-668-11	s	CHIP, METAL 100 0.50% 1/16W
R197	1-218-668-11	s	CHIP, METAL 100 0.50% 1/16W
R198	1-218-668-11	s	CHIP, METAL 100 0.50% 1/16W
R199	1-218-732-11	s	METAL 47K 0.50% 1/16W
R200	1-218-716-11	s	METAL 10K 0.50% 1/16W
R201	1-218-732-11	s	METAL 47K 0.50% 1/16W
R202	1-218-675-11	s	CHIP, METAL 200 0.50% 1/16W

(AU-203 BOARD)

Ref. No. or Q'ty	Part No.	SP	Description
R203	1-218-675-11	s	CHIP, METAL 200 0.50% 1/16W
R204	1-218-675-11	s	CHIP, METAL 200 0.50% 1/16W
R205	1-218-675-11	s	CHIP, METAL 200 0.50% 1/16W
R206	1-218-711-11	s	METAL 6.2K 0.50% 1/16W
R207	1-218-692-11	s	CHIP, METAL 1K 0.50% 1/16W
R208	1-218-692-11	s	CHIP, METAL 1K 0.50% 1/16W
R209	1-218-692-11	s	CHIP, METAL 1K 0.50% 1/16W
R210	1-218-692-11	s	CHIP, METAL 1K 0.50% 1/16W
R211	1-218-711-11	s	METAL 6.2K 0.50% 1/16W
R212	1-218-717-11	s	CHIP, METAL 11K 0.50% 1/16W
R213	1-218-717-11	s	CHIP, METAL 11K 0.50% 1/16W
R214	1-218-740-11	s	METAL 100K 0.50% 1/16W
R215	1-218-692-11	s	CHIP, METAL 1K 0.50% 1/16W
R216	1-218-740-11	s	METAL 100K 0.50% 1/16W
R217	1-218-711-11	s	METAL 6.2K 0.50% 1/16W
R218	1-218-692-11	s	CHIP, METAL 1K 0.50% 1/16W
R219	1-218-711-11	s	METAL 6.2K 0.50% 1/16W
R220	1-218-716-11	s	METAL 10K 0.50% 1/16W
R221	1-218-692-11	s	CHIP, METAL 1K 0.50% 1/16W
R222	1-218-716-11	s	METAL 10K 0.50% 1/16W
R223	1-218-716-11	s	METAL 10K 0.50% 1/16W
R224	1-218-740-11	s	METAL 100K 0.50% 1/16W
R225	1-218-692-11	s	CHIP, METAL 1K 0.50% 1/16W
R226	1-218-740-11	s	METAL 100K 0.50% 1/16W
R227	1-218-740-11	s	METAL 100K 0.50% 1/16W
R228	1-218-716-11	s	METAL 10K 0.50% 1/16W
R229	1-218-716-11	s	METAL 10K 0.50% 1/16W
R230	1-218-740-11	s	METAL 100K 0.50% 1/16W
R231	1-218-644-11	s	METAL 10 0.50% 1/16W
R232	1-218-644-11	s	METAL 10 0.50% 1/16W
R233	1-218-716-11	s	METAL 10K 0.50% 1/16W
R234	1-218-706-11	s	METAL 3.9K 0.50% 1/16W
R235	1-218-724-11	s	CHIP, METAL 22K 5% 1/16W
R236	1-218-706-11	s	METAL 3.9K 0.50% 1/16W
R237	1-218-732-11	s	METAL 47K 0.50% 1/16W
R238	1-218-706-11	s	METAL 3.9K 0.50% 1/16W
R239	1-218-724-11	s	CHIP, METAL 22K 5% 1/16W
R240	1-218-740-11	s	METAL 100K 0.50% 1/16W
R241	1-218-675-11	s	CHIP, METAL 200 0.50% 1/16W
R242	1-218-675-11	s	CHIP, METAL 200 0.50% 1/16W
R243	1-218-675-11	s	CHIP, METAL 200 0.50% 1/16W
R244	1-218-675-11	s	CHIP, METAL 200 0.50% 1/16W
R245	1-218-692-11	s	CHIP, METAL 1K 0.50% 1/16W
R246	1-218-692-11	s	CHIP, METAL 1K 0.50% 1/16W
R247	1-218-692-11	s	CHIP, METAL 1K 0.50% 1/16W
R248	1-218-692-11	s	CHIP, METAL 1K 0.50% 1/16W
R249	1-218-706-11	s	METAL 3.9K 0.50% 1/16W
R250	1-218-692-11	s	CHIP, METAL 1K 0.50% 1/16W
R251	1-218-706-11	s	METAL 3.9K 0.50% 1/16W
R253	1-218-706-11	s	METAL 3.9K 0.50% 1/16W
R256	1-218-706-11	s	METAL 3.9K 0.50% 1/16W
R257	1-218-720-11	s	METAL 15K 0.50% 1/16W
R258	1-218-706-11	s	METAL 3.9K 0.50% 1/16W
R259	1-218-668-11	s	CHIP, METAL 100 0.50% 1/16W
R260	1-218-692-11	s	CHIP, METAL 1K 0.50% 1/16W
R261	1-218-716-11	s	METAL 10K 0.50% 1/16W
R262	1-218-716-11	s	METAL 10K 0.50% 1/16W
R263	1-218-706-11	s	METAL 3.9K 0.50% 1/16W
R264	1-218-724-11	s	CHIP, METAL 22K 5% 1/16W

(AU-203 BOARD)

Ref. No. or Q'ty	Part No.	SP	Description
R265	1-218-706-11	s	METAL 3.9K 0.50% 1/16W
R266	1-218-732-11	s	METAL 47K 0.50% 1/16W
R267	1-218-732-11	s	METAL 47K 0.50% 1/16W
R268	1-218-724-11	s	CHIP, METAL 22K 5% 1/16W
R269	1-218-724-11	s	CHIP, METAL 22K 5% 1/16W
R270	1-218-706-11	s	METAL 3.9K 0.50% 1/16W
R271	1-218-716-11	s	METAL 10K 0.50% 1/16W
R272	1-218-716-11	s	METAL 10K 0.50% 1/16W
R273	1-218-720-11	s	METAL 15K 0.50% 1/16W
R274	1-218-724-11	s	CHIP, METAL 22K 5% 1/16W
R275	1-218-701-11	s	METAL 2.4K 0.50% 1/16W
R276	1-218-740-11	s	METAL 100K 0.50% 1/16W
R277	1-218-706-11	s	METAL 3.9K 0.50% 1/16W
R278	1-218-668-11	s	CHIP, METAL 100 0.50% 1/16W
R279	1-218-732-11	s	METAL 47K 0.50% 1/16W
R280	1-218-732-11	s	METAL 47K 0.50% 1/16W
R281	1-218-732-11	s	METAL 47K 0.50% 1/16W
R282	1-218-699-11	s	CHIP, METAL 2K 0.50% 1/16W
R283	1-218-748-11	s	CHIP, METAL 220K 0.50% 1/16W
R284	1-218-723-11	s	METAL 20K 0.50% 1/16W
R285	1-218-723-11	s	METAL 20K 0.50% 1/16W
R286	1-218-723-11	s	METAL 20K 0.50% 1/16W
R287	1-218-723-11	s	METAL 20K 0.50% 1/16W
R289	1-218-716-11	s	METAL 10K 0.50% 1/16W
R290	1-218-732-11	s	METAL 47K 0.50% 1/16W
R291	1-218-723-11	s	METAL 20K 0.50% 1/16W
R292	1-218-732-11	s	METAL 47K 0.50% 1/16W
R293	1-218-732-11	s	METAL 47K 0.50% 1/16W
R294	1-218-732-11	s	METAL 47K 0.50% 1/16W
R297	1-218-732-11	s	METAL 47K 0.50% 1/16W
R298	1-218-724-11	s	CHIP, METAL 22K 5% 1/16W
R299	1-218-716-11	s	METAL 10K 0.50% 1/16W
R302	1-218-724-11	s	CHIP, METAL 22K 5% 1/16W
R304	1-218-724-11	s	CHIP, METAL 22K 5% 1/16W
R307	1-218-724-11	s	CHIP, METAL 22K 5% 1/16W
R309	1-218-724-11	s	CHIP, METAL 22K 5% 1/16W
R310	1-218-716-11	s	METAL 10K 0.50% 1/16W
R311	1-218-724-11	s	CHIP, METAL 22K 5% 1/16W
R312	1-218-724-11	s	CHIP, METAL 22K 5% 1/16W
R313	1-218-724-11	s	CHIP, METAL 22K 5% 1/16W
R314	1-218-724-11	s	CHIP, METAL 22K 5% 1/16W
R315	1-218-724-11	s	CHIP, METAL 22K 5% 1/16W
R316	1-218-724-11	s	CHIP, METAL 22K 5% 1/16W
R317	1-218-724-11	s	CHIP, METAL 22K 5% 1/16W
R318	1-218-724-11	s	CHIP, METAL 22K 5% 1/16W
R319	1-218-724-11	s	CHIP, METAL 22K 5% 1/16W
R320	1-218-724-11	s	CHIP, METAL 22K 5% 1/16W
R321	1-218-748-11	s	CHIP, METAL 220K 0.50% 1/16W
R322	1-218-644-11	s	METAL 10 0.50% 1/16W
R324	1-218-732-11	s	METAL 47K 0.50% 1/16W
R326	1-218-716-11	s	METAL 10K 0.50% 1/16W
R330	1-218-724-11	s	CHIP, METAL 22K 5% 1/16W
R335	1-218-740-11	s	METAL 100K 0.50% 1/16W
R338	1-218-728-11	s	METAL 33K 0.50% 1/16W
R339	1-218-644-11	s	METAL 10 0.50% 1/16W
R340	1-218-644-11	s	METAL 10 0.50% 1/16W
R341	1-218-644-11	s	METAL 10 0.50% 1/16W
R342	1-218-644-11	s	METAL 10 0.50% 1/16W
R343	1-218-644-11	s	METAL 10 0.50% 1/16W

(AU-203 BOARD)

Ref. No. or Q'ty	Part No.	SP	Description
R344	1-218-644-11	s	METAL 10 0.50% 1/16W
R345	1-218-644-11	s	METAL 10 0.50% 1/16W
R346	1-218-644-11	s	METAL 10 0.50% 1/16W
R347	1-218-748-11	s	CHIP, METAL 220K 0.50% 1/16W
R348	1-218-748-11	s	CHIP, METAL 220K 0.50% 1/16W
R349	1-218-748-11	s	CHIP, METAL 220K 0.50% 1/16W
R350	1-218-748-11	s	CHIP, METAL 220K 0.50% 1/16W
R355	1-218-732-11	s	METAL 47K 0.50% 1/16W
R356	1-218-732-11	s	METAL 47K 0.50% 1/16W
R357	1-218-732-11	s	METAL 47K 0.50% 1/16W
R358	1-218-732-11	s	METAL 47K 0.50% 1/16W
R360	1-218-716-11	s	METAL 10K 0.50% 1/16W
R361	1-218-732-11	s	METAL 47K 0.50% 1/16W
R362	1-218-732-11	s	METAL 47K 0.50% 1/16W
R363	1-218-732-11	s	METAL 47K 0.50% 1/16W
R364	1-218-732-11	s	METAL 47K 0.50% 1/16W
R365	1-218-732-11	s	METAL 47K 0.50% 1/16W
R366	1-218-732-11	s	METAL 47K 0.50% 1/16W
R367	1-218-737-11	s	CHIP, METAL 75K 0.50% 1/16W
R370	1-218-740-11	s	METAL 100K 0.50% 1/16W
R372	1-218-644-11	s	METAL 10 0.50% 1/16W
R373	1-218-644-11	s	METAL 10 0.50% 1/16W
R374	1-218-644-11	s	METAL 10 0.50% 1/16W
R375	1-218-644-11	s	METAL 10 0.50% 1/16W
R376	1-218-675-11	s	CHIP, METAL 200 0.50% 1/16W
R377	1-218-732-11	s	METAL 47K 0.50% 1/16W
R378	1-218-732-11	s	METAL 47K 0.50% 1/16W
R379	1-218-644-11	s	METAL 10 0.50% 1/16W
R380	1-218-644-11	s	METAL 10 0.50% 1/16W
R381	1-218-675-11	s	CHIP, METAL 200 0.50% 1/16W
R382	1-218-732-11	s	METAL 47K 0.50% 1/16W
R383	1-218-732-11	s	METAL 47K 0.50% 1/16W
R384	1-218-731-11	s	CHIP, METAL 43K 0.50% 1/16W
R386	1-218-644-11	s	METAL 10 0.50% 1/16W
R387	1-218-644-11	s	METAL 10 0.50% 1/16W
R393	1-218-724-11	s	CHIP, METAL 22K 5% 1/16W
R395	1-218-724-11	s	CHIP, METAL 22K 5% 1/16W
R396	1-218-732-11	s	METAL 47K 0.50% 1/16W
R397	1-218-732-11	s	METAL 47K 0.50% 1/16W
R398	1-218-732-11	s	METAL 47K 0.50% 1/16W
R399	1-218-732-11	s	METAL 47K 0.50% 1/16W
R405	1-218-668-11	s	CHIP, METAL 100 0.50% 1/16W
R407	1-218-668-11	s	CHIP, METAL 100 0.50% 1/16W
R409	1-218-675-11	s	CHIP, METAL 200 0.50% 1/16W
R410	1-218-732-11	s	METAL 47K 0.50% 1/16W
R411	1-218-708-11	s	METAL 4.7K 0.50% 1/16W
R500	1-218-724-11	s	CHIP, METAL 22K 5% 1/16W
R501	1-218-724-11	s	CHIP, METAL 22K 5% 1/16W
R502	1-218-724-11	s	CHIP, METAL 22K 5% 1/16W
R503	1-218-724-11	s	CHIP, METAL 22K 5% 1/16W
R504	1-218-716-11	s	METAL 10K 0.50% 1/16W
R506	1-218-716-11	s	METAL 10K 0.50% 1/16W
R507	1-218-644-11	s	METAL 10 0.50% 1/16W
R508	1-218-644-11	s	METAL 10 0.50% 1/16W
R600	1-216-864-11	s	METAL, CHIP 0 5% 1/16W
R601	1-216-864-11	s	METAL, CHIP 0 5% 1/16W
RV1	1-241-741-11	s	RES, ADJ METAL 50K
RV2	1-241-741-11	s	RES, ADJ METAL 50K

(AU-203 BOARD)

Ref. No. or Q'ty	Part No.	SP	Description
RV3	1-241-834-21	s	RES, ADJ, METAL 20K
RV4	1-241-741-11	s	RES, ADJ METAL 50K
RV5	1-241-741-11	s	RES, ADJ METAL 50K
RV7	1-241-741-11	s	RES, ADJ METAL 50K
RV8	1-241-833-11	s	RES, ADJ, METAL 10K
RV9	1-241-833-11	s	RES, ADJ, METAL 10K
RV10	1-241-833-11	s	RES, ADJ, METAL 10K
S1	1-762-118-21	s	SWITCH, TOGGLE
S2	1-554-295-00	s	SWITCH, SLIDE
S3	1-554-295-00	s	SWITCH, SLIDE
S4	1-572-342-11	s	SWITCH, SLIDE
S5	1-572-342-11	s	SWITCH, SLIDE
S6	1-570-711-11	s	SWITCH, SLIDE
S7	1-692-270-41	s	SWITCH, SLIDE
S8	1-692-270-41	s	SWITCH, SLIDE
S9	1-692-530-11	s	SWITCH, TOGGLE
S10	1-570-711-11	s	SWITCH, SLIDE
S11	1-570-711-11	s	SWITCH, SLIDE
S12	1-570-711-11	s	SWITCH, SLIDE
S13	1-570-711-11	s	SWITCH, SLIDE
S14	1-570-711-11	s	SWITCH, SLIDE
S15	1-570-711-11	s	SWITCH, SLIDE

CN-1034 BOARD

Ref. No. or Q'ty	Part No.	SP	Description
1pc	A-8273-228-A	o	MOUNTED CIRCUIT BOARD, CN-1034
C1	1-162-964-11	s	CERAMIC 0.001uF 10% 50V
C2	1-162-964-11	s	CERAMIC 0.001uF 10% 50V
C3	1-162-964-11	s	CERAMIC 0.001uF 10% 50V
C4	1-162-964-11	s	CERAMIC 0.001uF 10% 50V
C5	1-162-964-11	s	CERAMIC 0.001uF 10% 50V
C6	1-162-964-11	s	CERAMIC 0.001uF 10% 50V
C7	1-162-964-11	s	CERAMIC 0.001uF 10% 50V
C8	1-162-964-11	s	CERAMIC 0.001uF 10% 50V
C9	1-162-964-11	s	CERAMIC 0.001uF 10% 50V
C10	1-162-964-11	s	CERAMIC 0.001uF 10% 50V
C11	1-164-005-11	s	CERAMIC, CHIP 0.47uF 25V
C12	1-164-005-11	s	CERAMIC, CHIP 0.47uF 25V
C13	1-164-005-11	s	CERAMIC, CHIP 0.47uF 25V
C14	1-164-005-11	s	CERAMIC, CHIP 0.47uF 25V
C15	1-164-005-11	s	CERAMIC, CHIP 0.47uF 25V
C16	1-164-005-11	s	CERAMIC, CHIP 0.47uF 25V
CN2	1-569-532-11	s	HOUSING, 30P
CN3	1-569-532-11	s	HOUSING, 30P
CN5	1-695-479-11	o	PIN, CONNECTOR (PC BOARD) 2P
CN6	1-764-088-11	o	PIN, CONNECTOR (PC BOARD) 3P

CN-1039 BOARD

Ref. No. or Q'ty	Part No.	SP	Description
1pc	A-8273-156-A	o	MOUNTED CIRCUIT BOARD, CN-1039
C1	1-162-964-11	s	CERAMIC 0.001uF 10% 50V
C2	1-162-964-11	s	CERAMIC 0.001uF 10% 50V
C3	1-162-964-11	s	CERAMIC 0.001uF 10% 50V
C4	1-162-964-11	s	CERAMIC 0.001uF 10% 50V
C5	1-162-964-11	s	CERAMIC 0.001uF 10% 50V
C6	1-162-964-11	s	CERAMIC 0.001uF 10% 50V
C7	1-162-964-11	s	CERAMIC 0.001uF 10% 50V
C8	1-162-964-11	s	CERAMIC 0.001uF 10% 50V
C9	1-162-964-11	s	CERAMIC 0.001uF 10% 50V
CN2	1-569-532-11	s	HOUSING, 30P
CN3	1-569-532-11	s	HOUSING, 30P
CN4	1-764-088-11	o	PIN, CONNECTOR (PC BOARD) 3P
D1	8-719-059-51	s	DIODE MA3J142E0LSO
D2	8-719-051-05	s	DIODE EC10QS06-TE12L5
D3	8-719-051-05	s	DIODE EC10QS06-TE12L5
FL1	1-239-719-11	s	FILTER, CHIP EMI
FL2	1-239-719-11	s	FILTER, CHIP EMI
FL3	1-239-825-11	s	FILTER, CHIP EMI
FL4	1-239-825-11	s	FILTER, CHIP EMI
FL5	1-239-825-11	s	FILTER, CHIP EMI
R1	1-216-864-11	s	METAL, CHIP 0 5% 1/16W

CN-1239 BOARD

Ref. No. or Q'ty	Part No.	SP	Description
1pc	1-658-609-11	o	PRINTED CIRCUIT BOARD, CN-1239
C1	1-163-275-11	s	CERAMIC 0.001uF 5% 50V
C2	1-163-275-11	s	CERAMIC 0.001uF 5% 50V
C3	1-163-275-11	s	CERAMIC 0.001uF 5% 50V
C4	1-163-275-11	s	CERAMIC 0.001uF 5% 50V
C5	1-163-275-11	s	CERAMIC 0.001uF 5% 50V
C6	1-163-275-11	s	CERAMIC 0.001uF 5% 50V
CN43	1-750-933-21	o	PIN, CONNECTOR 12P
JC1	1-216-295-11	s	CHIP, CONDUCTOR 0
JC4	1-216-295-11	s	CHIP, CONDUCTOR 0
JC5	1-216-295-11	s	CHIP, CONDUCTOR 0
JC8	1-216-295-11	s	CHIP, CONDUCTOR 0

CN-1270 BOARD

Ref. No. or Q'ty	Part No.	SP	Description
1pc	A-8273-187-A	o	MOUNTED CIRCUIT BOARD, CN-1270
2pcs	3-185-960-01	o	HEXAGON SUPPORT M3X7
2pcs	7-682-903-01	s	SCREW +PWH 3X5
2pcs	7-682-646-09	s	SCREW +PS 3X5
C1	1-135-213-21	s	TANTALUM, CHIP 3.3uF 20% 25V
C2	1-135-213-21	s	TANTALUM, CHIP 3.3uF 20% 25V
C3	1-164-156-11	s	CERAMIC 0.1uF 25V
C4	1-128-402-11	s	ELECT 33uF 20% 35V
C5	1-128-402-11	s	ELECT 33uF 20% 35V
C6	1-135-213-21	s	TANTALUM, CHIP 3.3uF 20% 25V
C7	1-135-213-21	s	TANTALUM, CHIP 3.3uF 20% 25V
C8	1-164-156-11	s	CERAMIC 0.1uF 25V
C9	1-128-402-11	s	ELECT 33uF 20% 35V
C10	1-128-402-11	s	ELECT 33uF 20% 35V
C11	1-164-156-11	s	CERAMIC 0.1uF 25V
CN1	1-750-933-21	o	PIN, CONNECTOR 12P
CN2	1-750-935-21	o	PIN, CONNECTOR 30P
CN3	1-750-934-21	o	PIN, CONNECTOR 20P
CN4	1-750-933-21	o	PIN, CONNECTOR 12P
CN5	1-506-468-11	s	CONNECTOR, 3P, MALE
CN6	1-750-933-21	o	PIN, CONNECTOR 12P
CN7	1-564-241-11	o	PIN, CONNECTOR (B4P-VH) 4P
CN8	1-564-320-00	s	PIN, CONNECTOR (B2P-VH) 2P
CN9	1-564-104-00	o	PIN, CONNECTOR (B3P-VH) 3P
CN10	1-563-893-21	s	SOCKET, D-SUB 50P, FEMALE
CN11	1-568-801-11	s	CONNECTOR, FPC (ZIF) 24P
Q1	8-729-928-90	s	TRANSISTOR DTC114EE
Q2	8-729-101-07	s	TRANSISTOR 2SB798
Q3	8-729-117-16	s	TRANSISTOR 2SA1611-M6
Q4	8-729-928-90	s	TRANSISTOR DTC114EE
Q5	8-729-101-07	s	TRANSISTOR 2SB798
Q6	8-729-117-16	s	TRANSISTOR 2SA1611-M6
R1	1-218-660-91	s	CHIP, METAL 47 0.50% 1/16W
R2	1-218-708-11	s	METAL 4.7K 0.50% 1/16W
R3	1-218-606-11	s	CHIP, METAL 2.2 5% 1W
R4	1-218-690-11	s	CHIP, METAL 820 0.50% 1/16W
R5	1-218-660-91	s	CHIP, METAL 47 0.50% 1/16W
R6	1-218-708-11	s	METAL 4.7K 0.50% 1/16W
R7	1-218-606-11	s	CHIP, METAL 2.2 5% 1W
R8	1-218-690-11	s	CHIP, METAL 820 0.50% 1/16W
R10	1-216-295-11	s	CHIP, CONDUCTOR 0

CN-1280 BOARD

Ref. No. or Q'ty	Part No.	SP	Description
1pc	A-8273-184-A	o	MOUNTED CIRCUIT BOARD, CN-1280
C1	1-107-823-11	s	CHIP, CERAMIC 0.47uF 10% 16V
C2	1-107-823-11	s	CHIP, CERAMIC 0.47uF 10% 16V
C3	1-107-823-11	s	CHIP, CERAMIC 0.47uF 10% 16V
C4	1-107-823-11	s	CHIP, CERAMIC 0.47uF 10% 16V
CN1	1-770-580-11	o	SOCKET, CONNECTOR(PCB-PCB) 26P
CN2	1-750-933-21	o	PIN, CONNECTOR 12P
CN3	1-750-934-21	o	PIN, CONNECTOR 20P
R1	1-218-716-11	s	METAL 10K 0.50% 1/16W

CN-1282 BOARD

Ref. No. or Q'ty	Part No.	SP	Description
1pc	A-8273-158-A	o	MOUNTED CIRCUIT BOARD, CN-1282
34pcs	1-774-994-11	o	CONTACT, SOCKET
CN1	1-580-561-11	o	PIN, CONNECTOR 12P
CN2	1-580-558-11	o	PIN, CONNECTOR (PC BOARD) 6P
CN3	1-580-558-11	o	PIN, CONNECTOR (PC BOARD) 6P
CN4	1-580-562-11	o	PIN, CONNECTOR (PC BOARD) 14P
CN5	1-564-321-00	s	PIN, CONNECTOR 2P
CN7	1-580-558-11	o	PIN, CONNECTOR (PC BOARD) 6P
FL1	1-239-825-11	s	FILTER, CHIP EMI
FL2	1-239-825-11	s	FILTER, CHIP EMI
FL3	1-239-825-11	s	FILTER, CHIP EMI
FL4	1-239-825-11	s	FILTER, CHIP EMI
FL5	1-239-825-11	s	FILTER, CHIP EMI
FL6	1-239-825-11	s	FILTER, CHIP EMI
FL7	1-239-825-11	s	FILTER, CHIP EMI
FL8	1-239-825-11	s	FILTER, CHIP EMI
FL9	1-239-825-11	s	FILTER, CHIP EMI
FL10	1-239-825-11	s	FILTER, CHIP EMI
FL11	1-239-825-11	s	FILTER, CHIP EMI
FL12	1-239-825-11	s	FILTER, CHIP EMI
FL13	1-239-825-11	s	FILTER, CHIP EMI
FL14	1-239-825-11	s	FILTER, CHIP EMI
FL15	1-239-825-11	s	FILTER, CHIP EMI
FL16	1-239-825-11	s	FILTER, CHIP EMI
FL17	1-239-825-11	s	FILTER, CHIP EMI
FL18	1-239-825-11	s	FILTER, CHIP EMI

CN-1290 BOARD

Ref. No. or Q'ty	Part No.	SP	Description
1pc	1-660-255-11	o	PRINTED CIRCUIT BOARD, CN-1290
CN1	1-764-093-21	o	PIN, CONNECTOR (PC BOARD) 8P
CN2	1-766-696-11	o	CONNECTOR, 8P

CN-1291 BOARD

Ref. No. or Q'ty	Part No.	SP	Description
1pc	1-660-062-11	o	PRINTED CIRCUIT BOARD, CN-1291
1pc	3-603-262-02	o	SPACER, XLR
4pcs	7-627-556-58	s	SCREW +P 2.6X5
CN1	1-695-207-21	o	PIN, CONNECTOR (PC BOARD) 6P
CN2	1-563-030-31	s	CONNECTOR, 3P (MALE)
CN3	1-563-030-31	s	CONNECTOR, 3P (MALE)
C1-C6	1-163-275-11	s	CERAMIC, CHIP 1000P 5% 50V

CN-1292 BOARD

Ref. No. or Q'ty	Part No.	SP	Description
1pc	A-8273-166-A	o	MOUNTED CIRCUIT BOARD, CN-1292
CN1	1-695-207-21	o	PIN, CONNECTOR (PC BOARD) 6P
CN2	1-573-618-11	s	CONNECTOR (ROUND TYPE)
C1-C6	1-163-275-11	s	CERAMIC, CHIP 1000P 5% 50V

CN-1296 BOARD

Ref. No. or Q'ty	Part No.	SP	Description
1pc	A-8273-182-A	o	MOUNTED CIRCUIT BOARD, CN-1296
1pc	3-602-478-01	o	PANEL,IF PC BOARD
1pc	3-724-753-01	o	RING
6pcs	3-729-061-01	s	SCREW (M2X4.5) (TYPE 1)
CN3	1-778-005-21	o	CONNECTOR, BOARD TO BOARD 20P

CN-1334 BOARD

Ref. No. or Q'ty	Part No.	SP	Description
1pc	A-8273-249-A	o	MOUNTED CIRCUIT BOARD, CN-1334
CN1	1-568-338-11	s	CONNECTOR, BOARD TO BOARD 24P
CN2	1-568-337-21	o	CONNECTOR, BOARD TO BOARD 22P

CN-986 BOARD

Ref. No. or Q'ty	Part No.	SP	Description
1pc	1-653-467-11	o	PRINTED CIRCUIT BOARD, CN-986
CN51	1-564-241-11	o	PIN, CONNECTOR (B4P-VH) 4P
CN52	1-564-320-00	s	PIN, CONNECTOR (B2P-VH) 2P
CN53	1-564-243-11	o	PIN, CONNECTOR 6P
CN54	1-564-104-00	o	PIN, CONNECTOR (B3P-VH) 3P

CN-988 BOARD

Ref. No. or Q'ty	Part No.	SP	Description
1pc	1-709-123-11	o	PRINTED CIRCUIT BOARD, CONBINED CN-988/989/990
CN44	1-580-531-11	o	PIN, CONNECTOR 4P

CN-989 BOARD

Ref. No. or Q'ty	Part No.	SP	Description
1pc	1-709-123-11	o	PRINTED CIRCUIT BOARD, CONBINED CN-988/989/990
CN45	1-580-542-11	o	PIN, CONNECTOR 26P

CN-990 BOARD

Ref. No. or Q'ty	Part No.	SP	Description
1pc	1-709-123-11	o	PRINTED CIRCUIT BOARD, CONBINED CN-988/989/990

DAD-19 BOARD

Ref. No. or Q'ty	Part No.	SP	Description
1pc	A-8273-137-A	o	MOUNTED CIRCUIT BOARD, DAD-19
1pc	3-602-444-01	o	SPACER,FROAT
1pc	2-130-288-01	o	SUPPORT
2pcs	7-621-770-87	s	SCREW +B 2.6X5
C1	1-162-970-11	s	CERAMIC, CHIP 0.01uF 10% 25V
C2	1-162-970-11	s	CERAMIC, CHIP 0.01uF 10% 25V
C3	1-162-970-11	s	CERAMIC, CHIP 0.01uF 10% 25V
C4	1-162-970-11	s	CERAMIC, CHIP 0.01uF 10% 25V
C5	1-162-970-11	s	CERAMIC, CHIP 0.01uF 10% 25V
C6	1-162-970-11	s	CERAMIC, CHIP 0.01uF 10% 25V
C7	1-162-970-11	s	CERAMIC, CHIP 0.01uF 10% 25V
C8	1-162-970-11	s	CERAMIC, CHIP 0.01uF 10% 25V
C9	1-162-970-11	s	CERAMIC, CHIP 0.01uF 10% 25V
C10	1-162-970-11	s	CERAMIC, CHIP 0.01uF 10% 25V
C11	1-113-682-11	s	CHIP, TANTALUM 33uF 20% 10V
C12	1-162-970-11	s	CERAMIC, CHIP 0.01uF 10% 25V
C13	1-162-970-11	s	CERAMIC, CHIP 0.01uF 10% 25V
C14	1-162-970-11	s	CERAMIC, CHIP 0.01uF 10% 25V
C15	1-164-156-11	s	CERAMIC 0.1uF 25V
C16	1-162-905-11	s	CERAMIC 1PF 0.25PF 50V
C17	1-162-970-11	s	CERAMIC, CHIP 0.01uF 10% 25V
C18	1-162-905-11	s	CERAMIC 1PF 0.25PF 50V
C20	1-164-156-11	s	CERAMIC 0.1uF 25V
C21	1-162-927-11	s	CERAMIC, CHIP 100PF 5% 50V
C22	1-162-970-11	s	CERAMIC, CHIP 0.01uF 10% 25V
C23	1-162-970-11	s	CERAMIC, CHIP 0.01uF 10% 25V
C24	1-162-927-11	s	CERAMIC, CHIP 100PF 5% 50V
C25	1-162-970-11	s	CERAMIC, CHIP 0.01uF 10% 25V
C26	1-164-156-11	s	CERAMIC 0.1uF 25V
C27	1-162-970-11	s	CERAMIC, CHIP 0.01uF 10% 25V
C28	1-162-927-11	s	CERAMIC, CHIP 100PF 5% 50V
C29	1-162-970-11	s	CERAMIC, CHIP 0.01uF 10% 25V
C30	1-113-682-11	s	CHIP, TANTALUM 33uF 20% 10V
C31	1-162-970-11	s	CERAMIC, CHIP 0.01uF 10% 25V
C32	1-162-970-11	s	CERAMIC, CHIP 0.01uF 10% 25V
C33	1-162-970-11	s	CERAMIC, CHIP 0.01uF 10% 25V
C34	1-164-156-11	s	CERAMIC 0.1uF 25V
C35	1-164-156-11	s	CERAMIC 0.1uF 25V
C36	1-162-970-11	s	CERAMIC, CHIP 0.01uF 10% 25V
C37	1-164-156-11	s	CERAMIC 0.1uF 25V
C38	1-104-851-11	s	TANTALUM, CHIP 10uF 20% 10V
C39	1-104-851-11	s	TANTALUM, CHIP 10uF 20% 10V
C40	1-162-970-11	s	CERAMIC, CHIP 0.01uF 10% 25V
C41	1-164-156-11	s	CERAMIC 0.1uF 25V
C42	1-162-970-11	s	CERAMIC, CHIP 0.01uF 10% 25V
C43	1-162-970-11	s	CERAMIC, CHIP 0.01uF 10% 25V
C44	1-162-970-11	s	CERAMIC, CHIP 0.01uF 10% 25V
C45	1-162-970-11	s	CERAMIC, CHIP 0.01uF 10% 25V
C46	1-135-177-21	s	TANTALUM, CHIP 1uF 10% 25V
C47	1-164-156-11	s	CERAMIC 0.1uF 25V
C48	1-162-970-11	s	CERAMIC, CHIP 0.01uF 10% 25V
C49	1-162-970-11	s	CERAMIC, CHIP 0.01uF 10% 25V
C50	1-162-970-11	s	CERAMIC, CHIP 0.01uF 10% 25V
C51	1-164-156-11	s	CERAMIC 0.1uF 25V
C52	1-162-970-11	s	CERAMIC, CHIP 0.01uF 10% 25V
C53	1-113-682-11	s	CHIP, TANTALUM 33uF 20% 10V
C54	1-164-156-11	s	CERAMIC 0.1uF 25V
C55	1-113-682-11	s	CHIP, TANTALUM 33uF 20% 10V

(DAD-19 BOARD)

Ref. No. or Q'ty	Part No.	SP	Description
C56	1-104-851-11	s	TANTALUM, CHIP 10uF 20% 10V
C57	1-162-970-11	s	CERAMIC, CHIP 0.01uF 10% 25V
C58	1-162-970-11	s	CERAMIC, CHIP 0.01uF 10% 25V
C59	1-162-970-11	s	CERAMIC, CHIP 0.01uF 10% 25V
C60	1-162-927-11	s	CERAMIC, CHIP 100PF 5% 50V
C61	1-162-970-11	s	CERAMIC, CHIP 0.01uF 10% 25V
C62	1-162-970-11	s	CERAMIC, CHIP 0.01uF 10% 25V
C63	1-162-970-11	s	CERAMIC, CHIP 0.01uF 10% 25V
C64	1-162-970-11	s	CERAMIC, CHIP 0.01uF 10% 25V
C65	1-164-156-11	s	CERAMIC 0.1uF 25V
C66	1-162-927-11	s	CERAMIC, CHIP 100PF 5% 50V
C67	1-164-156-11	s	CERAMIC 0.1uF 25V
C68	1-164-156-11	s	CERAMIC 0.1uF 25V
C69	1-162-970-11	s	CERAMIC, CHIP 0.01uF 10% 25V
C70	1-162-970-11	s	CERAMIC, CHIP 0.01uF 10% 25V
C71	1-162-970-11	s	CERAMIC, CHIP 0.01uF 10% 25V
C72	1-162-927-11	s	CERAMIC, CHIP 100PF 5% 50V
C73	1-162-970-11	s	CERAMIC, CHIP 0.01uF 10% 25V
C74	1-162-970-11	s	CERAMIC, CHIP 0.01uF 10% 25V
C75	1-164-156-11	s	CERAMIC 0.1uF 25V
C76	1-162-970-11	s	CERAMIC, CHIP 0.01uF 10% 25V
C77	1-162-970-11	s	CERAMIC, CHIP 0.01uF 10% 25V
C78	1-162-970-11	s	CERAMIC, CHIP 0.01uF 10% 25V
C79	1-162-970-11	s	CERAMIC, CHIP 0.01uF 10% 25V
C80	1-162-905-11	s	CERAMIC 1PF 0.25PF 50V
C81	1-162-970-11	s	CERAMIC, CHIP 0.01uF 10% 25V
C82	1-113-682-11	s	CHIP, TANTALUM 33uF 20% 10V
C83	1-113-682-11	s	CHIP, TANTALUM 33uF 20% 10V
C84	1-162-927-11	s	CERAMIC, CHIP 100PF 5% 50V
C85	1-135-177-21	s	TANTALUM, CHIP 1uF 10% 25V
C86	1-135-177-21	s	TANTALUM, CHIP 1uF 10% 25V
C87	1-164-156-11	s	CERAMIC 0.1uF 25V
C88	1-162-970-11	s	CERAMIC, CHIP 0.01uF 10% 25V
C89	1-162-970-11	s	CERAMIC, CHIP 0.01uF 10% 25V
C90	1-164-156-11	s	CERAMIC 0.1uF 25V
C91	1-162-970-11	s	CERAMIC, CHIP 0.01uF 10% 25V
C92	1-162-927-11	s	CERAMIC, CHIP 100PF 5% 50V
C93	1-162-970-11	s	CERAMIC, CHIP 0.01uF 10% 25V
C94	1-162-970-11	s	CERAMIC, CHIP 0.01uF 10% 25V
C95	1-162-970-11	s	CERAMIC, CHIP 0.01uF 10% 25V
C96	1-162-970-11	s	CERAMIC, CHIP 0.01uF 10% 25V
C97	1-162-970-11	s	CERAMIC, CHIP 0.01uF 10% 25V
C98	1-162-970-11	s	CERAMIC, CHIP 0.01uF 10% 25V
C99	1-164-156-11	s	CERAMIC 0.1uF 25V
C100	1-162-970-11	s	CERAMIC, CHIP 0.01uF 10% 25V
C101	1-162-970-11	s	CERAMIC, CHIP 0.01uF 10% 25V
C102	1-162-970-11	s	CERAMIC, CHIP 0.01uF 10% 25V
C103	1-162-970-11	s	CERAMIC, CHIP 0.01uF 10% 25V
C104	1-162-970-11	s	CERAMIC, CHIP 0.01uF 10% 25V
C105	1-162-970-11	s	CERAMIC, CHIP 0.01uF 10% 25V
C106	1-162-970-11	s	CERAMIC, CHIP 0.01uF 10% 25V
C107	1-113-682-11	s	CHIP, TANTALUM 33uF 20% 10V
C108	1-162-970-11	s	CERAMIC, CHIP 0.01uF 10% 25V
C109	1-162-970-11	s	CERAMIC, CHIP 0.01uF 10% 25V
C110	1-113-682-11	s	CHIP, TANTALUM 33uF 20% 10V
C111	1-162-905-11	s	CERAMIC 1PF 0.25PF 50V
C112	1-162-905-11	s	CERAMIC 1PF 0.25PF 50V
C113	1-164-156-11	s	CERAMIC 0.1uF 25V
C114	1-164-156-11	s	CERAMIC 0.1uF 25V

http://getMANUAL.com

(DAD-19 BOARD)

Ref. No. or Q'ty	Part No.	SP	Description
C115	1-164-156-11	s	CERAMIC 0.1uF 25V
C116	1-162-970-11	s	CERAMIC, CHIP 0.01uF 10% 25V
C117	1-113-682-11	s	CHIP, TANTALUM 33uF 20% 10V
C118	1-162-927-11	s	CERAMIC, CHIP 100PF 5% 50V
C119	1-162-970-11	s	CERAMIC, CHIP 0.01uF 10% 25V
C120	1-162-927-11	s	CERAMIC, CHIP 100PF 5% 50V
C121	1-113-682-11	s	CHIP, TANTALUM 33uF 20% 10V
C122	1-113-682-11	s	CHIP, TANTALUM 33uF 20% 10V
C123	1-164-156-11	s	CERAMIC 0.1uF 25V
C124	1-162-970-11	s	CERAMIC, CHIP 0.01uF 10% 25V
C125	1-113-682-11	s	CHIP, TANTALUM 33uF 20% 10V
C126	1-162-970-11	s	CERAMIC, CHIP 0.01uF 10% 25V
C127	1-162-970-11	s	CERAMIC, CHIP 0.01uF 10% 25V
C128	1-162-970-11	s	CERAMIC, CHIP 0.01uF 10% 25V
C129	1-162-970-11	s	CERAMIC, CHIP 0.01uF 10% 25V
C130	1-162-970-11	s	CERAMIC, CHIP 0.01uF 10% 25V
C131	1-162-970-11	s	CERAMIC, CHIP 0.01uF 10% 25V
C132	1-162-970-11	s	CERAMIC, CHIP 0.01uF 10% 25V
C133	1-162-970-11	s	CERAMIC, CHIP 0.01uF 10% 25V
C134	1-164-156-11	s	CERAMIC 0.1uF 25V
C135	1-162-970-11	s	CERAMIC, CHIP 0.01uF 10% 25V
C136	1-164-156-11	s	CERAMIC 0.1uF 25V
C137	1-110-569-11	s	CHIP,TANTALUM 47uF 20% 6.3V
C138	1-164-156-11	s	CERAMIC 0.1uF 25V
C139	1-162-970-11	s	CERAMIC, CHIP 0.01uF 10% 25V
C140	1-162-970-11	s	CERAMIC, CHIP 0.01uF 10% 25V
C141	1-162-905-11	s	CERAMIC 1PF 0.25PF 50V
C142	1-104-851-11	s	TANTALUM, CHIP 10uF 20% 10V
C143	1-104-851-11	s	TANTALUM, CHIP 10uF 20% 10V
C144	1-162-970-11	s	CERAMIC, CHIP 0.01uF 10% 25V
C145	1-162-970-11	s	CERAMIC, CHIP 0.01uF 10% 25V
C147	1-164-156-11	s	CERAMIC 0.1uF 25V
C148	1-162-970-11	s	CERAMIC, CHIP 0.01uF 10% 25V
C149	1-162-927-11	s	CERAMIC, CHIP 100PF 5% 50V
C150	1-162-970-11	s	CERAMIC, CHIP 0.01uF 10% 25V
C151	1-162-970-11	s	CERAMIC, CHIP 0.01uF 10% 25V
C152	1-162-970-11	s	CERAMIC, CHIP 0.01uF 10% 25V
C153	1-162-970-11	s	CERAMIC, CHIP 0.01uF 10% 25V
C154	1-162-970-11	s	CERAMIC, CHIP 0.01uF 10% 25V
C155	1-164-156-11	s	CERAMIC 0.1uF 25V
C156	1-162-970-11	s	CERAMIC, CHIP 0.01uF 10% 25V
C157	1-162-970-11	s	CERAMIC, CHIP 0.01uF 10% 25V
C158	1-162-970-11	s	CERAMIC, CHIP 0.01uF 10% 25V
C159	1-162-970-11	s	CERAMIC, CHIP 0.01uF 10% 25V
C160	1-113-682-11	s	CHIP, TANTALUM 33uF 20% 10V
C161	1-162-970-11	s	CERAMIC, CHIP 0.01uF 10% 25V
C162	1-162-970-11	s	CERAMIC, CHIP 0.01uF 10% 25V
C163	1-162-905-11	s	CERAMIC 1PF 0.25PF 50V
C164	1-104-851-11	s	TANTALUM, CHIP 10uF 20% 10V
C165	1-162-970-11	s	CERAMIC, CHIP 0.01uF 10% 25V
C166	1-162-970-11	s	CERAMIC, CHIP 0.01uF 10% 25V
C167	1-162-905-11	s	CERAMIC 1PF 0.25PF 50V
C168	1-162-970-11	s	CERAMIC, CHIP 0.01uF 10% 25V
C169	1-162-970-11	s	CERAMIC, CHIP 0.01uF 10% 25V
C170	1-110-569-11	s	CHIP,TANTALUM 47uF 20% 6.3V
C171	1-162-927-11	s	CERAMIC, CHIP 100PF 5% 50V
C172	1-162-970-11	s	CERAMIC, CHIP 0.01uF 10% 25V
C173	1-162-927-11	s	CERAMIC, CHIP 100PF 5% 50V

(DAD-19 BOARD)

Ref. No. or Q'ty	Part No.	SP	Description
C175	1-162-970-11	s	CERAMIC, CHIP 0.01uF 10% 25V
C176	1-113-682-11	s	CHIP, TANTALUM 33uF 20% 10V
C177	1-162-970-11	s	CERAMIC, CHIP 0.01uF 10% 25V
C178	1-162-970-11	s	CERAMIC, CHIP 0.01uF 10% 25V
C179	1-162-970-11	s	CERAMIC, CHIP 0.01uF 10% 25V
C180	1-164-156-11	s	CERAMIC 0.1uF 25V
C181	1-162-970-11	s	CERAMIC, CHIP 0.01uF 10% 25V
C182	1-162-970-11	s	CERAMIC, CHIP 0.01uF 10% 25V
C183	1-164-156-11	s	CERAMIC 0.1uF 25V
C184	1-104-851-11	s	TANTALUM, CHIP 10uF 20% 10V
C185	1-104-851-11	s	TANTALUM, CHIP 10uF 20% 10V
C186	1-164-156-11	s	CERAMIC 0.1uF 25V
C187	1-164-156-11	s	CERAMIC 0.1uF 25V
C188	1-162-970-11	s	CERAMIC, CHIP 0.01uF 10% 25V
C189	1-162-970-11	s	CERAMIC, CHIP 0.01uF 10% 25V
C190	1-164-156-11	s	CERAMIC 0.1uF 25V
C191	1-162-970-11	s	CERAMIC, CHIP 0.01uF 10% 25V
C192	1-162-970-11	s	CERAMIC, CHIP 0.01uF 10% 25V
C194	1-164-156-11	s	CERAMIC 0.1uF 25V
C195	1-164-156-11	s	CERAMIC 0.1uF 25V
C196	1-162-970-11	s	CERAMIC, CHIP 0.01uF 10% 25V
C197	1-164-156-11	s	CERAMIC 0.1uF 25V
C198	1-162-970-11	s	CERAMIC, CHIP 0.01uF 10% 25V
C199	1-162-927-11	s	CERAMIC, CHIP 100PF 5% 50V
C200	1-162-970-11	s	CERAMIC, CHIP 0.01uF 10% 25V
C201	1-162-970-11	s	CERAMIC, CHIP 0.01uF 10% 25V
C202	1-162-970-11	s	CERAMIC, CHIP 0.01uF 10% 25V
C203	1-162-970-11	s	CERAMIC, CHIP 0.01uF 10% 25V
C204	1-113-682-11	s	CHIP, TANTALUM 33uF 20% 10V
C205	1-164-156-11	s	CERAMIC 0.1uF 25V
C206	1-162-970-11	s	CERAMIC, CHIP 0.01uF 10% 25V
C207	1-164-156-11	s	CERAMIC 0.1uF 25V
C208	1-164-156-11	s	CERAMIC 0.1uF 25V
C209	1-164-156-11	s	CERAMIC 0.1uF 25V
C210	1-162-970-11	s	CERAMIC, CHIP 0.01uF 10% 25V
C211	1-162-970-11	s	CERAMIC, CHIP 0.01uF 10% 25V
C212	1-162-964-11	s	CERAMIC 0.001uF 10% 50V
C213	1-162-970-11	s	CERAMIC, CHIP 0.01uF 10% 25V
C214	1-104-851-11	s	TANTALUM, CHIP 10uF 20% 10V
C215	1-162-964-11	s	CERAMIC 0.001uF 10% 50V
C216	1-162-964-11	s	CERAMIC 0.001uF 10% 50V
C217	1-162-970-11	s	CERAMIC, CHIP 0.01uF 10% 25V
C218	1-162-970-11	s	CERAMIC, CHIP 0.01uF 10% 25V
D1	8-719-800-76	s	DIODE 1SS226
DL1	1-406-743-11	s	DELAY LINE 27.0nS
DL2	1-415-889-11	s	DELAY LINE
FL1	1-233-606-21	s	FILTER (SMD), LOW PASS
FL3	1-233-601-11	s	FILTER (SMD), LOW PASS
FL4	1-233-601-11	s	FILTER (SMD), LOW PASS
FL5	1-234-076-21	s	FILTER (SMD), LOW PASS
IC1	8-759-386-26	s	IC 74LCX574MTCX
IC2	8-759-054-61	s	IC CLC505AJE
IC3	8-759-054-61	s	IC CLC505AJE
IC4	8-759-054-61	s	IC CLC505AJE
IC5	8-759-347-04	s	IC SPT7860SCT
IC6	8-752-375-98	s	IC CXD2315Q
IC7	8-759-082-61	s	IC TC4W53FU

(DAD-19 BOARD)

Ref. No. or Q'ty	Part No.	SP	Description
IC8	8-759-386-26	s	IC 74LCX574MTCX
IC9	8-759-327-01	s	IC NJM062V(TE2)
IC10	8-759-327-01	s	IC NJM062V(TE2)
IC11	8-759-531-66	o	IC 7032V-DAD19-YPS-V1.0
IC12	8-759-421-88	s	IC SN74LVC821APW-E05
IC13 ⚠	8-759-185-42	s	IC LM4040AIM3-2.5
IC14 ⚠	8-759-327-01	s	IC NJM062V(TE2)
IC15	8-759-347-04	s	IC SPT7860SCT
IC16	8-759-421-88	s	IC SN74LVC821APW-E05
IC17 ⚠	8-759-327-01	s	IC NJM062V(TE2)
IC18	8-759-054-61	s	IC CLC505AJE
IC19	8-752-375-98	s	IC CXD2315Q
IC20	8-759-531-68	o	IC 7032V-DAD19-SP-V2.00
IC22	8-759-531-70	o	IC 7032V-DAD19-CPS-V1.0
IC23	8-759-054-61	s	IC CLC505AJE
IC24	8-759-054-61	s	IC CLC505AJE
IC25	8-759-347-04	s	IC SPT7860SCT
IC26	8-759-421-88	s	IC SN74LVC821APW-E05
IC28	8-759-327-01	s	IC NJM062V(TE2)
IC29	8-759-082-61	s	IC TC4W53FU
IC30	8-759-327-01	s	IC NJM062V(TE2)
IC31	8-759-327-01	s	IC NJM062V(TE2)
IC32	8-759-054-61	s	IC CLC505AJE
IC33	8-752-375-98	s	IC CXD2315Q
IC34	8-759-421-88	s	IC SN74LVC821APW-E05
IC35	8-759-531-65	o	IC 7032V-DAD19-FW-V2.00
IC36	8-759-054-61	s	IC CLC505AJE
IC38	8-759-054-61	s	IC CLC505AJE
IC39	8-759-347-04	s	IC SPT7860SCT
IC40	8-759-421-88	s	IC SN74LVC821APW-E05
IC41	8-759-082-61	s	IC TC4W53FU
IC42	8-759-421-88	s	IC SN74LVC821APW-E05
IC43	8-759-389-33	s	IC 74LCX244MTCX
IC44	8-759-389-26	s	IC 74LCX08MTCX
IC45	8-759-389-33	s	IC 74LCX244MTCX
IC46	8-759-531-69	o	IC 7032V-DAD19-TG-V2.00
IC47	8-752-339-46	s	IC CXD1177Q
IC48	8-759-054-61	s	IC CLC505AJE
IC49	8-759-389-26	s	IC 74LCX08MTCX
IC50	8-759-389-26	s	IC 74LCX08MTCX
IC51	8-759-531-67	o	IC 7032V-DAD19-QTV-V2.0
IC52	8-759-445-73	s	IC M66256FP-E2
IC53	8-759-472-65	s	IC 74VHC574MTCX
IC54	8-759-389-33	s	IC 74LCX244MTCX
IC55	8-759-175-04	s	IC PCF8574T-T
IC56	8-759-007-63	s	IC MC74HC75F
IC57	8-759-175-04	s	IC PCF8574T-T
IC58	8-759-389-33	s	IC 74LCX244MTCX
IC59	8-759-086-41	s	IC X24C02S-3.0
IC60	8-759-180-08	s	IC TC74HC4538AFS
IC61	8-759-386-26	s	IC 74LCX574MTCX
L1	1-412-390-21	s	INDUCTOR CHIP 0uH
L2	1-412-390-21	s	INDUCTOR CHIP 0uH
L3	1-412-390-21	s	INDUCTOR CHIP 0uH
L4	1-412-390-21	s	INDUCTOR CHIP 0uH
L5	1-412-390-21	s	INDUCTOR CHIP 0uH
L6	1-412-390-21	s	INDUCTOR CHIP 0uH

(DAD-19 BOARD)

Ref. No. or Q'ty	Part No.	SP	Description
L7	1-412-390-21	s	INDUCTOR CHIP 0uH
L8	1-412-390-21	s	INDUCTOR CHIP 0uH
L9	1-412-390-21	s	INDUCTOR CHIP 0uH
L10	1-412-390-21	s	INDUCTOR CHIP 0uH
L11	1-412-390-21	s	INDUCTOR CHIP 0uH
L12	1-412-390-21	s	INDUCTOR CHIP 0uH
L13	1-412-390-21	s	INDUCTOR CHIP 0uH
L14	1-412-390-21	s	INDUCTOR CHIP 0uH
L15	1-412-390-21	s	INDUCTOR CHIP 0uH
L16	1-412-390-21	s	INDUCTOR CHIP 0uH
Q1	8-729-820-86	s	TRANSISTOR 2SB1121-ST
Q2	8-729-820-86	s	TRANSISTOR 2SB1121-ST
Q3	8-729-117-32	s	TRANSISTOR 2SC4177
Q5	8-729-143-13	s	TRANSISTOR 2SC4176-B34
Q6	8-729-143-13	s	TRANSISTOR 2SC4176-B34
Q7	8-729-928-90	s	TRANSISTOR DTC114EE
Q8	8-729-928-90	s	TRANSISTOR DTC114EE
Q10	8-729-143-07	s	TRANSISTOR 2SA1610-Y33
Q11	8-729-143-07	s	TRANSISTOR 2SA1610-Y33
Q12 ⚠	8-729-820-90	s	TRANSISTOR 2SD1621-ST
Q13 ⚠	8-729-820-90	s	TRANSISTOR 2SD1621-ST
Q15	8-729-117-32	s	TRANSISTOR 2SC4177
Q17	8-729-143-07	s	TRANSISTOR 2SA1610-Y33
Q18	8-729-143-13	s	TRANSISTOR 2SC4176-B34
Q19	8-729-117-32	s	TRANSISTOR 2SC4177
R2	1-218-695-11	s	METAL 1.3K 0.50% 1/16W
R3	1-218-660-91	s	CHIP, METAL 47 0.50% 1/16W
R5	1-216-864-11	s	METAL, CHIP 0 5% 1/16W
R6	1-218-851-11	s	CHIP, METAL 1.5K 0.50% 1/16W
R8	1-218-680-11	s	METAL 330 0.50% 1/16W
R9	1-218-692-11	s	CHIP, METAL 1K 0.50% 1/16W
R10	1-218-680-11	s	METAL 330 0.50% 1/16W
R11	1-218-688-11	s	METAL 680 0.50% 1/16W
R12	1-218-688-11	s	METAL 680 0.50% 1/16W
R13	1-218-664-11	s	CHIP, METAL 68 0.50% 1/16W
R14	1-218-691-11	s	CHIP, METAL 910 0.50% 1/16W
R15	1-218-674-11	s	METAL 180 0.50% 1/16W
R16	1-218-680-11	s	METAL 330 0.50% 1/16W
R17	1-218-695-11	s	METAL 1.3K 0.50% 1/16W
R18	1-218-680-11	s	METAL 330 0.50% 1/16W
R19	1-218-676-11	s	METAL 220 0.50% 1/16W
R20	1-218-660-91	s	CHIP, METAL 47 0.50% 1/16W
R21	1-218-652-11	s	CHIP, METAL 22 0.50% 1/16W
R22	1-218-652-11	s	CHIP, METAL 22 0.50% 1/16W
R23	1-218-727-11	s	METAL 30K 0.50% 1/16W
R24	1-218-740-11	s	METAL 100K 0.50% 1/16W
R25	1-218-740-11	s	METAL 100K 0.50% 1/16W
R26	1-216-854-11	s	METAL, CHIP 560K 5% 1/16W
R27	1-218-722-11	s	CHIP, METAL 18K 0.50% 1/16W
R28	1-218-740-11	s	METAL 100K 0.50% 1/16W
R29	1-218-716-11	s	METAL 10K 0.50% 1/16W
R30	1-218-702-11	s	CHIP, METAL 2.7K 0.50% 1/16W
R31	1-218-710-11	s	CHIP, METAL 5.6K 0.50% 1/16W
R32	1-218-688-11	s	METAL 680 0.50% 1/16W

(DAD-19 BOARD)

Ref. No. or Q'ty	Part No.	SP	Description
R33	1-218-724-11	s	CHIP, METAL 22K 5% 1/16W
R34	1-218-692-11	s	CHIP, METAL 1K 0.50% 1/16W
R36	1-218-716-11	s	METAL 10K 0.50% 1/16W
R37	1-218-723-11	s	METAL 20K 0.50% 1/16W
R38	1-218-716-11	s	METAL 10K 0.50% 1/16W
R39	1-218-699-11	s	CHIP, METAL 2K 0.50% 1/16W
R40	1-218-716-11	s	METAL 10K 0.50% 1/16W
R41	1-218-716-11	s	METAL 10K 0.50% 1/16W
R42	1-218-728-11	s	METAL 33K 0.50% 1/16W
R43	1-218-652-11	s	CHIP, METAL 22 0.50% 1/16W
R44	1-218-675-11	s	CHIP, METAL 200 0.50% 1/16W
R45	1-218-675-11	s	CHIP, METAL 200 0.50% 1/16W
R46	1-218-701-11	s	METAL 2.4K 0.50% 1/16W
R47	1-218-700-11	s	METAL 2.2K 0.50% 1/16W
R48	1-218-700-11	s	METAL 2.2K 0.50% 1/16W
R50	1-218-716-11	s	METAL 10K 0.50% 1/16W
R51	1-218-700-11	s	METAL 2.2K 0.50% 1/16W
R52	1-218-675-11	s	CHIP, METAL 200 0.50% 1/16W
R53	1-218-716-11	s	METAL 10K 0.50% 1/16W
R54	1-218-700-11	s	METAL 2.2K 0.50% 1/16W
R55	1-218-675-11	s	CHIP, METAL 200 0.50% 1/16W
R56	1-218-660-91	s	CHIP, METAL 47 0.50% 1/16W
R57	1-218-685-11	s	METAL 510 0.50% 1/16W
R58	1-218-660-91	s	CHIP, METAL 47 0.50% 1/16W
R59	1-218-724-11	s	CHIP, METAL 22K 5% 1/16W
R60	1-218-724-11	s	CHIP, METAL 22K 5% 1/16W
R61	1-218-718-11	s	CHIP, METAL 12K 0.50% 1/16W
R62	1-218-700-11	s	METAL 2.2K 0.50% 1/16W
R63	1-218-675-11	s	CHIP, METAL 200 0.50% 1/16W
R64	1-218-700-11	s	METAL 2.2K 0.50% 1/16W
R65	1-218-675-11	s	CHIP, METAL 200 0.50% 1/16W
R66	1-218-660-91	s	CHIP, METAL 47 0.50% 1/16W
R67	1-218-675-11	s	CHIP, METAL 200 0.50% 1/16W
R68	1-218-700-11	s	METAL 2.2K 0.50% 1/16W
R69	1-218-700-11	s	METAL 2.2K 0.50% 1/16W
R71	1-216-864-11	s	METAL, CHIP 0 5% 1/16W
R72	1-216-864-11	s	METAL, CHIP 0 5% 1/16W
R73	1-218-675-11	s	CHIP, METAL 200 0.50% 1/16W
R74	1-218-675-11	s	CHIP, METAL 200 0.50% 1/16W
R75	1-218-692-11	s	CHIP, METAL 1K 0.50% 1/16W
R76	1-218-675-11	s	CHIP, METAL 200 0.50% 1/16W
R77	1-218-700-11	s	METAL 2.2K 0.50% 1/16W
R78	1-218-685-11	s	METAL 510 0.50% 1/16W
R79	1-218-724-11	s	CHIP, METAL 22K 5% 1/16W
R80	1-218-724-11	s	CHIP, METAL 22K 5% 1/16W
R81	1-218-652-11	s	CHIP, METAL 22 0.50% 1/16W
R82	1-218-727-11	s	METAL 30K 0.50% 1/16W
R83	1-216-854-11	s	METAL, CHIP 560K 5% 1/16W
R84	1-218-722-11	s	CHIP, METAL 18K 0.50% 1/16W
R85	1-218-740-11	s	METAL 100K 0.50% 1/16W
R86	1-218-652-11	s	CHIP, METAL 22 0.50% 1/16W
R88	1-216-864-11	s	METAL, CHIP 0 5% 1/16W
R89	1-216-864-11	s	METAL, CHIP 0 5% 1/16W
R90	1-218-700-11	s	METAL 2.2K 0.50% 1/16W
R91	1-218-700-11	s	METAL 2.2K 0.50% 1/16W
R92	1-218-700-11	s	METAL 2.2K 0.50% 1/16W
R93	1-218-660-91	s	METAL 47 0.50% 1/16W

(DAD-19 BOARD)

Ref. No. or Q'ty	Part No.	SP	Description
R106	1-218-702-11	s	CHIP, METAL 2.7K 0.50% 1/16W
R109	1-218-695-11	s	METAL 1.3K 0.50% 1/16W
R110	1-218-694-11	s	CHIP, METAL 1.2K 0.50% 1/16W
R111	1-218-680-11	s	METAL 330 0.50% 1/16W
R112	1-218-680-11	s	METAL 330 0.50% 1/16W
R113	1-218-688-11	s	METAL 680 0.50% 1/16W
R115	1-218-680-11	s	METAL 330 0.50% 1/16W
R116	1-218-695-11	s	METAL 1.3K 0.50% 1/16W
R118	1-218-688-11	s	METAL 680 0.50% 1/16W
R119	1-218-676-11	s	METAL 220 0.50% 1/16W
R120	1-218-660-91	s	CHIP, METAL 47 0.50% 1/16W
R121	1-218-652-11	s	CHIP, METAL 22 0.50% 1/16W
R122	1-218-700-11	s	METAL 2.2K 0.50% 1/16W
R123	1-218-740-11	s	METAL 100K 0.50% 1/16W
R124	1-218-740-11	s	METAL 100K 0.50% 1/16W
R125	1-218-717-11	s	CHIP, METAL 11K 0.50% 1/16W
R126	1-218-718-11	s	CHIP, METAL 12K 0.50% 1/16W
R127	1-218-675-11	s	CHIP, METAL 200 0.50% 1/16W
R128	1-218-710-11	s	CHIP, METAL 5.6K 0.50% 1/16W
R129	1-218-716-11	s	METAL 10K 0.50% 1/16W
R130	1-218-708-11	s	METAL 4.7K 0.50% 1/16W
R134	1-218-692-11	s	CHIP, METAL 1K 0.50% 1/16W
R135	1-216-864-11	s	METAL, CHIP 0 5% 1/16W
R136	1-218-716-11	s	METAL 10K 0.50% 1/16W
R137	1-218-716-11	s	METAL 10K 0.50% 1/16W
R138	1-218-675-11	s	CHIP, METAL 200 0.50% 1/16W
R139	1-218-700-11	s	METAL 2.2K 0.50% 1/16W
R140	1-218-685-11	s	METAL 510 0.50% 1/16W
R141	1-218-652-11	s	CHIP, METAL 22 0.50% 1/16W
R142	1-218-727-11	s	METAL 30K 0.50% 1/16W
R143	1-216-854-11	s	METAL, CHIP 560K 5% 1/16W
R144	1-218-722-11	s	CHIP, METAL 18K 0.50% 1/16W
R145	1-218-740-11	s	CHIP, METAL 100K 0.50% 1/16W
R146	1-218-702-11	s	CHIP, METAL 2.7K 0.50% 1/16W
R147	1-218-725-11	s	METAL 24K 0.50% 1/16W
R148	1-218-652-11	s	CHIP, METAL 22 0.50% 1/16W
R149	1-218-881-11	s	CHIP, METAL 27K 0.50% 1/16W
R150	1-218-695-11	s	METAL 1.3K 0.50% 1/16W
R151	1-218-694-11	s	CHIP, METAL 1.2K 0.50% 1/16W
R152	1-218-680-11	s	METAL 330 0.50% 1/16W
R153	1-218-680-11	s	METAL 330 0.50% 1/16W
R154	1-218-688-11	s	METAL 680 0.50% 1/16W
R155	1-218-688-11	s	METAL 680 0.50% 1/16W

(DAD-19 BOARD)

Ref. No. or Q'ty	Part No.	SP	Description
R156	1-218-680-11	s	METAL 330 0.50% 1/16W
R157	1-218-695-11	s	METAL 1.3K 0.50% 1/16W
R159	1-218-676-11	s	METAL 220 0.50% 1/16W
R160	1-218-660-91	s	CHIP, METAL 47 0.50% 1/16W
R161	1-218-652-11	s	CHIP, METAL 22 0.50% 1/16W
R162	1-218-700-11	s	METAL 2.2K 0.50% 1/16W
R163	1-218-740-11	s	METAL 100K 0.50% 1/16W
R164	1-218-700-11	s	METAL 2.2K 0.50% 1/16W
R165	1-218-740-11	s	METAL 100K 0.50% 1/16W
R166	1-218-710-11	s	CHIP, METAL 5.6K 0.50% 1/16W
R167	1-218-652-11	s	CHIP, METAL 22 0.50% 1/16W
R168	1-218-708-11	s	METAL 4.7K 0.50% 1/16W
R169	1-218-652-11	s	CHIP, METAL 22 0.50% 1/16W
R170	1-218-692-11	s	CHIP, METAL 1K 0.50% 1/16W
R171	1-216-854-11	s	METAL, CHIP 560K 5% 1/16W
R172	1-216-854-11	s	METAL, CHIP 560K 5% 1/16W
R173	1-218-685-11	s	CHIP, METAL 510 0.50% 1/16W
R174	1-218-692-11	s	CHIP, METAL 1K 0.50% 1/16W
R175	1-218-680-11	s	METAL 330 0.50% 1/16W
R176	1-218-687-11	s	CHIP, METAL 620 0.50% 1/16W
R177	1-216-864-11	s	METAL, CHIP 0 5% 1/16W
R178	1-218-689-11	s	CHIP, METAL 750 0.50% 1/16W
R179	1-216-854-11	s	METAL, CHIP 560K 5% 1/16W
R180	1-218-665-11	s	CHIP, METAL 75 0.50% 1/16W
R181	1-218-700-11	s	METAL 2.2K 0.50% 1/16W
R182	1-218-738-11	s	CHIP, METAL 82K 0.50% 1/16W
R183	1-218-700-11	s	METAL 2.2K 0.50% 1/16W
R184	1-218-727-11	s	METAL 30K 0.50% 1/16W
R185	1-216-864-11	s	METAL, CHIP 0 5% 1/16W
R186	1-218-723-11	s	METAL 20K 0.50% 1/16W
R187	1-218-704-11	s	METAL 3.3K 0.50% 1/16W
R188	1-218-668-11	s	CHIP, METAL 100 0.50% 1/16W
R189	1-218-652-11	s	CHIP, METAL 22 0.50% 1/16W
R190	1-218-668-11	s	CHIP, METAL 100 0.50% 1/16W
R191	1-218-652-11	s	CHIP, METAL 22 0.50% 1/16W
R192	1-218-652-11	s	CHIP, METAL 22 0.50% 1/16W
R193	1-218-652-11	s	CHIP, METAL 22 0.50% 1/16W
R194	1-218-716-11	s	METAL 10K 0.50% 1/16W
R195	1-218-716-11	s	METAL 10K 0.50% 1/16W
R196	1-218-716-11	s	METAL 10K 0.50% 1/16W
R197	1-218-716-11	s	METAL 10K 0.50% 1/16W
R198	1-218-716-11	s	METAL 10K 0.50% 1/16W
R199	1-218-716-11	s	METAL 10K 0.50% 1/16W
R200	1-218-716-11	s	METAL 10K 0.50% 1/16W
R201	1-218-716-11	s	METAL 10K 0.50% 1/16W
R202	1-218-652-11	s	CHIP, METAL 22 0.50% 1/16W
R203	1-218-652-11	s	CHIP, METAL 22 0.50% 1/16W
R204	1-218-740-11	s	METAL 100K 0.50% 1/16W
R205	1-218-740-11	s	METAL 100K 0.50% 1/16W
R206	1-218-668-11	s	CHIP, METAL 100 0.50% 1/16W
R207	1-218-668-11	s	CHIP, METAL 100 0.50% 1/16W
R208	1-218-668-11	s	CHIP, METAL 100 0.50% 1/16W
R209	1-218-668-11	s	CHIP, METAL 100 0.50% 1/16W
R210	1-218-701-11	s	METAL 2.4K 0.50% 1/16W
R211	1-218-716-11	s	METAL 10K 0.50% 1/16W
R212	1-218-716-11	s	METAL 10K 0.50% 1/16W
R213	1-218-665-11	s	CHIP, METAL 75 0.50% 1/16W
R214	1-216-864-11	s	METAL, CHIP 0 5% 1/16W

(DAD-19 BOARD)

Ref. No. or Q'ty	Part No.	SP	Description
R215	1-218-740-11	s	METAL 100K 0.50% 1/16W
R216	1-218-740-11	s	METAL 100K 0.50% 1/16W
R217	1-218-717-11	s	CHIP, METAL 11K 0.50% 1/16W
R222	1-218-716-11	s	METAL 10K 0.50% 1/16W
R223	1-218-740-11	s	METAL 100K 0.50% 1/16W
R225	1-216-864-11	s	METAL, CHIP 0 5% 1/16W
R226	1-216-854-11	s	METAL, CHIP 560K 5% 1/16W
R227	1-216-854-11	s	METAL, CHIP 560K 5% 1/16W
R228	1-218-703-11	s	CHIP, METAL 3K 0.50% 1/16W
R229	1-218-716-11	s	METAL 10K 0.50% 1/16W
R230	1-218-716-11	s	METAL 10K 0.50% 1/16W
R231	1-216-864-11	s	METAL, CHIP 0 5% 1/16W
R232	1-218-668-11	s	CHIP, METAL 100 0.50% 1/16W
R233	1-218-668-11	s	CHIP, METAL 100 0.50% 1/16W
R234	1-218-668-11	s	CHIP, METAL 100 0.50% 1/16W
R235	1-218-708-11	s	METAL 4.7K 0.50% 1/16W
R236	1-218-708-11	s	METAL 4.7K 0.50% 1/16W
R237	1-218-668-11	s	CHIP, METAL 100 0.50% 1/16W
R238	1-218-668-11	s	CHIP, METAL 100 0.50% 1/16W
R239	1-218-684-11	s	CHIP, METAL 470 0.50% 1/16W
R240	1-218-668-11	s	CHIP, METAL 100 0.50% 1/16W
R241	1-218-668-11	s	CHIP, METAL 100 0.50% 1/16W
R242	1-218-725-11	s	METAL 24K 0.50% 1/16W
R243	1-218-881-11	s	CHIP, METAL 27K 0.50% 1/16W
R244	1-218-652-11	s	CHIP, METAL 22 0.50% 1/16W
R245	1-218-684-11	s	CHIP, METAL 470 0.50% 1/16W
R246	1-218-668-11	s	CHIP, METAL 100 0.50% 1/16W
R247	1-218-684-11	s	CHIP, METAL 470 0.50% 1/16W
R248	1-218-668-11	s	CHIP, METAL 100 0.50% 1/16W
R256	1-218-716-11	s	METAL 10K 0.50% 1/16W
RV1	1-241-832-21	s	RES, ADJ, METAL 5K
RV2	1-241-832-21	s	RES, ADJ, METAL 5K
RV3	1-241-827-11	s	RES, ADJ, METAL 200
RV4	1-241-832-21	s	RES, ADJ, METAL 5K
RV5	1-241-832-21	s	RES, ADJ, METAL 5K
RV6	1-241-829-21	s	RES, ADJ, METAL 1K
RV7	1-241-832-21	s	RES, ADJ, METAL 5K
RV8	1-241-832-21	s	RES, ADJ, METAL 5K
RV9	1-241-829-21	s	RES, ADJ, METAL 1K

DAP-5 BOARD

Ref. No. or Q'ty	Part No.	SP	Description
1pc	A-8273-135-A	o	MOUNTED CIRCUIT BOARD, DAP-5
5pcs	3-729-061-01	s	SCREW (M2X4.5) (TYPE 1)
1pc	3-602-440-01	o	PANEL,DAP-5 PC BOARD
1pc	3-724-753-01	o	RING
1pc	3-729-061-01	s	SCREW (M2X4.5) (TYPE 1)
C1	1-162-970-11	s	CERAMIC, CHIP 0.01uF 10% 25V
C2	1-162-970-11	s	CERAMIC, CHIP 0.01uF 10% 25V
C3	1-162-970-11	s	CERAMIC, CHIP 0.01uF 10% 25V
C4	1-162-970-11	s	CERAMIC, CHIP 0.01uF 10% 25V
C5	1-162-970-11	s	CERAMIC, CHIP 0.01uF 10% 25V
C6	1-162-970-11	s	CERAMIC, CHIP 0.01uF 10% 25V
C7	1-162-904-11	s	CERAMIC, CHIP 0.5PF 0.25PF 50V
C8	1-162-904-11	s	CERAMIC, CHIP 0.5PF 0.25PF 50V
C9	1-162-970-11	s	CERAMIC, CHIP 0.01uF 10% 25V
C10	1-162-970-11	s	CERAMIC, CHIP 0.01uF 10% 25V
C11	1-162-964-11	s	CERAMIC 0.001uF 10% 50V
C12	1-162-964-11	s	CERAMIC 0.001uF 10% 50V
C13	1-162-927-11	s	CERAMIC, CHIP 100PF 5% 50V
C14	1-164-315-11	s	CERAMIC 470PF 5% 50V
C15	1-162-970-11	s	CERAMIC, CHIP 0.01uF 10% 25V
C16	1-164-315-11	s	CERAMIC 470PF 5% 50V
C17	1-162-968-11	s	CERAMIC, CHIP 0.0047uF 10% 50V
C18	1-162-927-11	s	CERAMIC, CHIP 100PF 5% 50V
C19	1-162-904-11	s	CERAMIC, CHIP 0.5PF 0.25PF 50V
C20	1-162-970-11	s	CERAMIC, CHIP 0.01uF 10% 25V
C21	1-162-970-11	s	CERAMIC, CHIP 0.01uF 10% 25V
C22	1-162-904-11	s	CERAMIC, CHIP 0.5PF 0.25PF 50V
C23	1-162-970-11	s	CERAMIC, CHIP 0.01uF 10% 25V
C24	1-162-970-11	s	CERAMIC, CHIP 0.01uF 10% 25V
C25	1-162-970-11	s	CERAMIC, CHIP 0.01uF 10% 25V
C26	1-162-970-11	s	CERAMIC, CHIP 0.01uF 10% 25V
C27	1-162-927-11	s	CERAMIC, CHIP 100PF 5% 50V
C28	1-162-927-11	s	CERAMIC, CHIP 100PF 5% 50V
C29	1-162-970-11	s	CERAMIC, CHIP 0.01uF 10% 25V
C30	1-162-970-11	s	CERAMIC, CHIP 0.01uF 10% 25V
C31	1-162-970-11	s	CERAMIC, CHIP 0.01uF 10% 25V
C32	1-162-970-11	s	CERAMIC, CHIP 0.01uF 10% 25V
C33	1-162-904-11	s	CERAMIC, CHIP 0.5PF 0.25PF 50V
C34	1-162-970-11	s	CERAMIC, CHIP 0.01uF 10% 25V
C35	1-162-970-11	s	CERAMIC, CHIP 0.01uF 10% 25V
C36	1-135-177-21	s	TANTALUM, CHIP 1uF 10% 25V
C37	1-162-964-11	s	CERAMIC 0.001uF 10% 50V
C38	1-162-904-11	s	CERAMIC, CHIP 0.5PF 0.25PF 50V
C39	1-135-177-21	s	TANTALUM, CHIP 1uF 10% 25V
C40	1-162-927-11	s	CERAMIC, CHIP 100PF 5% 50V
C41	1-162-970-11	s	CERAMIC, CHIP 0.01uF 10% 25V
C42	1-162-970-11	s	CERAMIC, CHIP 0.01uF 10% 25V
C43	1-162-964-11	s	CERAMIC 0.001uF 10% 50V
C44	1-164-315-11	s	CERAMIC 470PF 5% 50V
C45	1-162-970-11	s	CERAMIC, CHIP 0.01uF 10% 25V
C46	1-162-904-11	s	CERAMIC, CHIP 0.5PF 0.25PF 50V
C47	1-162-970-11	s	CERAMIC, CHIP 0.01uF 10% 25V
C48	1-164-156-11	s	CERAMIC 0.1uF 25V
C49	1-104-823-11	s	TANTALUM, CHIP 47uF 20% 16V
C50	1-164-156-11	s	CERAMIC 0.1uF 25V
C51	1-104-823-11	s	TANTALUM, CHIP 47uF 20% 16V
C52	1-162-970-11	s	CERAMIC, CHIP 0.01uF 10% 25V
C53	1-162-970-11	s	CERAMIC, CHIP 0.01uF 10% 25V
C54	1-162-927-11	s	CERAMIC, CHIP 100PF 5% 50V

(DAP-5 BOARD)

Ref. No. or Q'ty	Part No.	SP	Description
C55	1-162-927-11	s	CERAMIC, CHIP 100PF 5% 50V
C56	1-164-315-11	s	CERAMIC 470PF 5% 50V
C57	1-162-968-11	s	CERAMIC, CHIP 0.0047uF 10% 50V
C58	1-162-927-11	s	CERAMIC, CHIP 100PF 5% 50V
C59	1-162-970-11	s	CERAMIC, CHIP 0.01uF 10% 25V
C60	1-162-904-11	s	CERAMIC, CHIP 0.5PF 0.25PF 50V
C61	1-162-970-11	s	CERAMIC, CHIP 0.01uF 10% 25V
C62	1-162-970-11	s	CERAMIC, CHIP 0.01uF 10% 25V
C63	1-164-156-11	s	CERAMIC 0.1uF 25V
C64	1-162-927-11	s	CERAMIC, CHIP 100PF 5% 50V
C65	1-164-156-11	s	CERAMIC 0.1uF 25V
C66	1-162-927-11	s	CERAMIC, CHIP 100PF 5% 50V
C67	1-162-970-11	s	CERAMIC, CHIP 0.01uF 10% 25V
C68	1-162-970-11	s	CERAMIC, CHIP 0.01uF 10% 25V
C69	1-162-970-11	s	CERAMIC, CHIP 0.01uF 10% 25V
C70	1-164-156-11	s	CERAMIC 0.1uF 25V
C71	1-164-156-11	s	CERAMIC 0.1uF 25V
C72	1-162-904-11	s	CERAMIC, CHIP 0.5PF 0.25PF 50V
C73	1-164-156-11	s	CERAMIC 0.1uF 25V
C74	1-104-823-11	s	TANTALUM, CHIP 47uF 20% 16V
C75	1-164-156-11	s	CERAMIC 0.1uF 25V
C76	1-104-823-11	s	TANTALUM, CHIP 47uF 20% 16V
C77	1-162-915-11	s	CERAMIC, CHIP 10PF 5PF 50V
C78	1-162-927-11	s	CERAMIC, CHIP 100PF 5% 50V
C79	1-162-927-11	s	CERAMIC, CHIP 100PF 5% 50V
C80	1-162-915-11	s	CERAMIC, CHIP 10PF 5PF 50V
C81	1-135-177-21	s	TANTALUM, CHIP 1uF 10% 25V
C82	1-162-964-11	s	CERAMIC 0.001uF 10% 50V
C83	1-162-966-11	s	CERAMIC, CHIP 0.0022uF 10% 50V
C84	1-164-156-11	s	CERAMIC 0.1uF 25V
C85	1-135-177-21	s	TANTALUM, CHIP 1uF 10% 25V
C86	1-162-966-11	s	CERAMIC, CHIP 0.0022uF 10% 50V
C87	1-164-315-11	s	CERAMIC 470PF 5% 50V
C88	1-162-968-11	s	CERAMIC, CHIP 0.0047uF 10% 50V
C89	1-107-686-11	s	CHIP, TANTALUM 4.7uF 20% 16V
C90	1-162-970-11	s	CERAMIC, CHIP 0.01uF 10% 25V
C91	1-162-970-11	s	CERAMIC, CHIP 0.01uF 10% 25V
C92	1-162-968-11	s	CERAMIC, CHIP 0.0047uF 10% 50V
C93	1-162-927-11	s	CERAMIC, CHIP 100PF 5% 50V
C94	1-162-927-11	s	CERAMIC, CHIP 100PF 5% 50V
C95	1-162-970-11	s	CERAMIC, CHIP 0.01uF 10% 25V
C96	1-162-970-11	s	CERAMIC, CHIP 0.01uF 10% 25V
C97	1-162-970-11	s	CERAMIC, CHIP 0.01uF 10% 25V
C98	1-164-156-11	s	CERAMIC 0.1uF 25V
C99	1-162-970-11	s	CERAMIC, CHIP 0.01uF 10% 25V
C100	1-162-970-11	s	CERAMIC, CHIP 0.01uF 10% 25V
C101	1-162-904-11	s	CERAMIC, CHIP 0.5PF 0.25PF 50V
C102	1-164-156-11	s	CERAMIC 0.1uF 25V
C103	1-162-970-11	s	CERAMIC, CHIP 0.01uF 10% 25V
C104	1-162-970-11	s	CERAMIC, CHIP 0.01uF 10% 25V
C105	1-162-970-11	s	CERAMIC, CHIP 0.01uF 10% 25V
C106	1-162-919-11	s	CERAMIC, CHIP 22PF 5% 50V
C107	1-162-919-11	s	CERAMIC, CHIP 22PF 5% 50V
C108	1-162-966-11	s	CERAMIC, CHIP 0.0022uF 10% 50V
C109	1-162-919-11	s	CERAMIC, CHIP 22PF 5% 50V
C110	1-162-964-11	s	CERAMIC 0.001uF 10% 50V
C111	1-162-966-11	s	CERAMIC, CHIP 0.0022uF 10% 50V
C112	1-164-156-11	s	CERAMIC 0.1uF 25V
C113	1-162-919-11	s	CERAMIC, CHIP 22PF 5% 50V

(DAP-5 BOARD)

Ref. No. or Q'ty	Part No.	SP	Description
C114	1-164-156-11	s	CERAMIC 0.1uF 25V
C115	1-164-315-11	s	CERAMIC 470PF 5% 50V
C116	1-164-156-11	s	CERAMIC 0.1uF 25V
C117	1-107-686-11	s	CHIP, TANTALUM 4.7uF 20% 16V
C118	1-104-851-11	s	TANTALUM, CHIP 10uF 20% 10V
C119	1-164-156-11	s	CERAMIC 0.1uF 25V
C120	1-162-970-11	s	CERAMIC, CHIP 0.01uF 10% 25V
C121	1-104-851-11	s	TANTALUM, CHIP 10uF 20% 10V
C122	1-162-927-11	s	CERAMIC, CHIP 100PF 5% 50V
C123	1-164-156-11	s	CERAMIC 0.1uF 25V
C124	1-104-851-11	s	TANTALUM, CHIP 10uF 20% 10V
C125	1-164-156-11	s	CERAMIC 0.1uF 25V
C126	1-164-156-11	s	CERAMIC 0.1uF 25V
C127	1-164-156-11	s	CERAMIC 0.1uF 25V
C128	1-107-689-21	s	TANTAL 1uF 20% 35V
C129	1-107-689-21	s	TANTAL 1uF 20% 35V
C130	1-107-689-21	s	TANTAL 1uF 20% 35V
C131	1-107-689-21	s	TANTAL 1uF 20% 35V
C132	1-107-689-21	s	TANTAL 1uF 20% 35V
C133	1-104-823-11	s	TANTALUM, CHIP 47uF 20% 16V
C134	1-104-823-11	s	TANTALUM, CHIP 47uF 20% 16V
C135	1-164-156-11	s	CERAMIC 0.1uF 25V
C136	1-128-391-11	s	ELECT 330uF 20% 6.3V
C137	1-128-391-11	s	ELECT 330uF 20% 6.3V
C138	1-164-156-11	s	CERAMIC 0.1uF 25V
C139	1-164-156-11	s	CERAMIC 0.1uF 25V
C140	1-104-823-11	s	TANTALUM, CHIP 47uF 20% 16V
C141	1-164-156-11	s	CERAMIC 0.1uF 25V
C142	1-164-156-11	s	CERAMIC 0.1uF 25V
C143	1-164-156-11	s	CERAMIC 0.1uF 25V
C144	1-164-156-11	s	CERAMIC 0.1uF 25V
C145	1-164-156-11	s	CERAMIC 0.1uF 25V
C146	1-162-927-11	s	CERAMIC, CHIP 100PF 5% 50V
C147	1-164-677-11	s	CERAMIC 0.033uF 10% 16V
C148	1-162-927-11	s	CERAMIC, CHIP 100PF 5% 50V
C149	1-164-156-11	s	CERAMIC 0.1uF 25V
C150	1-164-156-11	s	CERAMIC 0.1uF 25V
C151	1-104-823-11	s	TANTALUM, CHIP 47uF 20% 16V
C152	1-164-156-11	s	CERAMIC 0.1uF 25V
C153	1-164-156-11	s	CERAMIC 0.1uF 25V
C154	1-162-915-11	s	CERAMIC, CHIP 10PF 5PF 50V
C155	1-164-156-11	s	CERAMIC 0.1uF 25V
C156	1-164-156-11	s	CERAMIC 0.1uF 25V
C157	1-162-927-11	s	CERAMIC, CHIP 100PF 5% 50V
C158	1-164-156-11	s	CERAMIC 0.1uF 25V
C159	1-135-212-21	s	TANTALUM, CHIP 2.2uF 20% 35V
C160	1-164-156-11	s	CERAMIC 0.1uF 25V
C161	1-126-392-11	s	ELECT, CHIP 100uF 20% 6.3V
C162	1-164-156-11	s	CERAMIC 0.1uF 25V
C163	1-104-913-11	s	TANTALUM, CHIP 10uF 20% 16V
C164	1-135-212-21	s	TANTALUM, CHIP 2.2uF 20% 35V
C165	1-104-851-11	s	TANTALUM, CHIP 10uF 20% 10V
C166	1-164-156-11	s	CERAMIC 0.1uF 25V
C167	1-104-851-11	s	TANTALUM, CHIP 10uF 20% 10V
C168	1-164-156-11	s	CERAMIC 0.1uF 25V
C169	1-164-156-11	s	CERAMIC 0.1uF 25V
C170	1-162-970-11	s	CERAMIC, CHIP 0.01uF 10% 25V
C171	1-104-851-11	s	TANTALUM, CHIP 10uF 20% 10V
C172	1-163-235-11	s	CERAMIC, CHIP 22PF 5% 50V

(DAP-5 BOARD)

Ref. No. or Q'ty	Part No.	SP	Description
C173	1-163-235-11	s	CERAMIC, CHIP 22PF 5% 50V
C174	1-162-970-11	s	CERAMIC, CHIP 0.01uF 10% 25V
C175	1-104-851-11	s	TANTALUM, CHIP 10uF 20% 10V
C176	1-164-156-11	s	CERAMIC 0.1uF 25V
C177	1-162-970-11	s	CERAMIC, CHIP 0.01uF 10% 25V
C178	1-164-156-11	s	CERAMIC 0.1uF 25V
C179	1-164-156-11	s	CERAMIC 0.1uF 25V
C180	1-104-852-11	s	TANTALUM, CHIP 22uF 20% 10V
C181	1-162-970-11	s	CERAMIC, CHIP 0.01uF 10% 25V
C182	1-164-156-11	s	CERAMIC 0.1uF 25V
C183	1-104-852-11	s	TANTALUM, CHIP 22uF 20% 10V
C184	1-104-852-11	s	TANTALUM, CHIP 22uF 20% 10V
C185	1-164-156-11	s	CERAMIC 0.1uF 25V
C186	1-164-156-11	s	CERAMIC 0.1uF 25V
C187	1-164-156-11	s	CERAMIC 0.1uF 25V
C188	1-164-156-11	s	CERAMIC 0.1uF 25V
C189	1-164-156-11	s	CERAMIC 0.1uF 25V
CNI36	1-540-151-11	s	SOCKET, IC
CP1	1-767-590-11	s	VIBRATOR,LITHIUM TANTALATE 13.5
CP2	1-767-589-11	s	VC0 24.576MHz
D1	8-719-059-52	s	DIODE MA3J14300LSO
D2	8-719-029-55	s	DIODE RD2.0UH-T1
D3	8-719-029-55	s	DIODE RD2.0UH-T1
D4	8-719-421-27	s	DIODE MA728
D5	8-719-800-76	s	DIODE 1SS226
D6	8-719-820-41	s	DIODE 1SS302
D7	8-719-029-55	s	DIODE RD2.0UH-T1
D8	8-719-029-55	s	DIODE RD2.0UH-T1
D9	8-719-029-55	s	DIODE RD2.0UH-T1
D10	8-719-029-55	s	DIODE RD2.0UH-T1
D11	8-719-820-41	s	DIODE 1SS302
D16	8-719-800-76	s	DIODE 1SS226
D17	8-719-059-51	s	DIODE MA3J142E0LSO
IC1	8-759-278-58	s	IC NJM4558V-TE2
IC2	8-759-278-58	s	IC NJM4558V-TE2
IC3	8-759-278-58	s	IC NJM4558V-TE2
IC4	8-759-278-58	s	IC NJM4558V-TE2
IC5	8-752-344-45	s	IC CXD2555Q
IC6	8-752-344-45	s	IC CXD2555Q
IC7	8-759-086-41	s	IC X24C02S-3.0
IC8	8-759-278-58	s	IC NJM4558V-TE2
IC9	8-759-278-58	s	IC NJM4558V-TE2
IC10	8-759-278-58	s	IC NJM4558V-TE2
IC11	8-759-278-58	s	IC NJM4558V-TE2
IC12	8-759-185-42	s	IC LM4040AIM3-2.5
IC13	8-759-076-06	s	IC TL064CPW
IC14	8-759-278-58	s	IC NJM4558V-TE2
IC15	8-752-344-45	s	IC CXD2555Q
IC16	8-759-336-17	s	IC AK5390-VS
IC17	8-759-973-71	s	IC TL7705CPS-B
IC18	8-759-054-61	s	IC CLC505AJE
IC19	8-759-278-58	s	IC NJM4558V-TE2
IC21	8-759-252-59	s	IC MAX202CSE
IC22	8-759-242-64	s	IC TC4W53F
IC23	8-759-349-19	s	IC NJM3414AM-TE2
IC24	8-759-928-09	s	IC TLC27M2CPS
IC25	8-759-058-54	s	IC TC7S00FU(TE85R)

(DAP-5 BOARD)

Ref. No. or Q'ty	Part No.	SP	Description
IC26	8-759-242-64	s	IC TC4W53F
IC27	8-759-928-09	s	IC TLC27M2CPS
IC28	8-759-058-62	s	IC TC7S08FU(TE85R)
IC29	8-759-928-09	s	IC TLC27M2CPS
IC30	8-759-069-36	s	IC MC74HC4046AF
IC31	8-759-260-55	s	IC TLC272CPW-E05
IC32	8-759-349-47	s	IC TLC393CPW-E05
IC33	8-759-180-08	s	IC TC74HC4538AFS
IC34	8-759-175-04	s	IC PCF8574T-T
IC37	8-759-069-36	s	IC MC74HC4046AF
IC38	8-759-260-55	s	IC TLC272CPW-E05
IC40	8-759-926-48	s	IC SN74HC244ANS
IC41	8-759-278-58	s	IC NJM4558V-TE2
IC42	8-759-278-58	s	IC NJM4558V-TE2
IC43	8-759-278-58	s	IC NJM4558V-TE2
IC44	8-759-278-58	s	IC NJM4558V-TE2
L1	1-412-390-21	s	INDUCTOR CHIP 0uH
L2	1-412-390-21	s	INDUCTOR CHIP 0uH
L3	1-412-390-21	s	INDUCTOR CHIP 0uH
L4	1-412-030-11	s	INDUCTOR CHIP 22uH
L5	1-412-030-11	s	INDUCTOR CHIP 22uH
Q1	8-729-820-86	s	TRANSISTOR 2SB1121-ST
Q2	8-729-820-86	s	TRANSISTOR 2SB1121-ST
Q3	8-729-143-13	s	TRANSISTOR 2SC4176-B34
Q4	8-729-143-13	s	TRANSISTOR 2SC4176-B34
Q5	8-729-928-90	s	TRANSISTOR DTC114EE
Q6	8-729-928-90	s	TRANSISTOR DTC114EE
Q8	8-729-143-07	s	TRANSISTOR 2SA1610-Y33
Q9	8-729-143-07	s	TRANSISTOR 2SA1610-Y33
Q13	8-729-820-90	s	TRANSISTOR 2SD1621-ST
Q14	8-729-820-90	s	TRANSISTOR 2SD1621-ST
Q19	8-729-928-36	s	TRANSISTOR DTA114EE
Q20	8-729-928-36	s	TRANSISTOR DTA114EE
Q21	8-729-117-16	s	TRANSISTOR 2SA1611-M6
Q22	8-729-117-32	s	TRANSISTOR 2SC4177
Q23	8-729-928-90	s	TRANSISTOR DTC114EE
Q24	8-729-021-63	s	TRANSISTOR 2SA1766-TD
Q25	8-729-928-90	s	TRANSISTOR DTC114EE
Q26	8-729-928-90	s	TRANSISTOR DTC114EE
Q27	8-729-143-13	s	TRANSISTOR 2SC4176-B34
Q28	8-729-029-14	s	TRANSISTOR DTC144EUA-T106
R1	1-218-706-11	s	METAL 3.9K 0.50% 1/16W
R2	1-218-710-11	s	CHIP, METAL 5.6K 0.50% 1/16W
R3	1-218-706-11	s	METAL 3.9K 0.50% 1/16W
R4	1-218-710-11	s	CHIP, METAL 5.6K 0.50% 1/16W
R5	1-218-740-11	s	METAL 100K 0.50% 1/16W
R6	1-218-724-11	s	CHIP, METAL 22K 5% 1/16W
R7	1-218-724-11	s	CHIP, METAL 22K 5% 1/16W
R8	1-218-724-11	s	CHIP, METAL 22K 5% 1/16W
R9	1-218-724-11	s	CHIP, METAL 22K 5% 1/16W
R10	1-218-692-11	s	CHIP, METAL 1K 0.50% 1/16W
R11	1-218-743-11	s	METAL 130K 0.50% 1/16W
R12	1-218-706-11	s	METAL 3.9K 0.50% 1/16W
R13	1-218-716-11	s	METAL 10K 0.50% 1/16W
R14	1-218-716-11	s	METAL 10K 0.50% 1/16W
R15	1-218-692-11	s	CHIP, METAL 1K 0.50% 1/16W
R16	1-218-743-11	s	METAL 130K 0.50% 1/16W
R17	1-218-706-11	s	METAL 3.9K 0.50% 1/16W

(DAP-5 BOARD)

Ref. No. or Q'ty	Part No.	SP	Description
R18	1-218-668-11	s	CHIP, METAL 100 0.50% 1/16W
R19	1-218-710-11	s	CHIP, METAL 5.6K 0.50% 1/16W
R20	1-218-668-11	s	CHIP, METAL 100 0.50% 1/16W
R21	1-218-740-11	s	METAL 100K 0.50% 1/16W
R22	1-218-740-11	s	METAL 100K 0.50% 1/16W
R23	1-218-710-11	s	CHIP, METAL 5.6K 0.50% 1/16W
R24	1-218-740-11	s	METAL 100K 0.50% 1/16W
R25	1-218-692-11	s	CHIP, METAL 1K 0.50% 1/16W
R26	1-218-706-11	s	METAL 3.9K 0.50% 1/16W
R27	1-218-692-11	s	CHIP, METAL 1K 0.50% 1/16W
R28	1-218-706-11	s	METAL 3.9K 0.50% 1/16W
R29	1-218-724-11	s	CHIP, METAL 22K 5% 1/16W
R30	1-218-724-11	s	CHIP, METAL 22K 5% 1/16W
R31	1-218-743-11	s	METAL 130K 0.50% 1/16W
R32	1-218-706-11	s	METAL 3.9K 0.50% 1/16W
R33	1-218-743-11	s	METAL 130K 0.50% 1/16W
R34	1-218-706-11	s	METAL 3.9K 0.50% 1/16W
R35	1-218-668-11	s	CHIP, METAL 100 0.50% 1/16W
R36	1-218-668-11	s	CHIP, METAL 100 0.50% 1/16W
R37	1-218-668-11	s	CHIP, METAL 100 0.50% 1/16W
R38	1-218-668-11	s	CHIP, METAL 100 0.50% 1/16W
R39	1-218-664-11	s	CHIP, METAL 68 0.50% 1/16W
R40	1-218-668-11	s	CHIP, METAL 100 0.50% 1/16W
R41	1-218-668-11	s	CHIP, METAL 100 0.50% 1/16W
R42	1-218-716-11	s	METAL 10K 0.50% 1/16W
R43	1-218-699-11	s	CHIP, METAL 2K 0.50% 1/16W
R44	1-218-710-11	s	CHIP, METAL 5.6K 0.50% 1/16W
R45	1-218-706-11	s	METAL 3.9K 0.50% 1/16W
R46	1-218-716-11	s	METAL 10K 0.50% 1/16W
R47	1-218-708-11	s	METAL 4.7K 0.50% 1/16W
R48	1-218-724-11	s	CHIP, METAL 22K 5% 1/16W
R49	1-218-706-11	s	METAL 3.9K 0.50% 1/16W
R50	1-218-724-11	s	CHIP, METAL 22K 5% 1/16W
R51	1-218-724-11	s	CHIP, METAL 22K 5% 1/16W
R52	1-218-692-11	s	CHIP, METAL 1K 0.50% 1/16W
R53	1-218-743-11	s	METAL 130K 0.50% 1/16W
R54	1-218-706-11	s	METAL 3.9K 0.50% 1/16W
R55	1-218-710-11	s	CHIP, METAL 5.6K 0.50% 1/16W
R56	1-218-675-11	s	CHIP, METAL 200 0.50% 1/16W
R57	1-218-675-11	s	CHIP, METAL 200 0.50% 1/16W
R58	1-218-668-11	s	CHIP, METAL 100 0.50% 1/16W
R59	1-218-710-11	s	CHIP, METAL 5.6K 0.50% 1/16W
R60	1-218-724-11	s	CHIP, METAL 22K 5% 1/16W
R61	1-218-716-11	s	METAL 10K 0.50% 1/16W
R62	1-218-716-11	s	METAL 10K 0.50% 1/16W
R63	1-218-692-11	s	CHIP, METAL 1K 0.50% 1/16W
R64	1-218-743-11	s	METAL 130K 0.50% 1/16W
R65	1-218-706-11	s	METAL 3.9K 0.50% 1/16W
R66	1-218-668-11	s	CHIP, METAL 100 0.50% 1/16W
R67	1-218-710-11	s	CHIP, METAL 5.6K 0.50% 1/16W
R68	1-218-692-11	s	CHIP, METAL 1K 0.50% 1/16W
R69	1-218-700-11	s	METAL 2.2K 0.50% 1/16W
R70	1-218-701-11	s	METAL 2.4K 0.50% 1/16W
R71	1-218-706-11	s	METAL 3.9K 0.50% 1/16W
R72	1-218-724-11	s	CHIP, METAL 22K 5% 1/16W
R73	1-218-706-11	s	METAL 3.9K 0.50% 1/16W
R74	1-218-743-11	s	METAL 130K 0.50% 1/16W
R75	1-218-706-11	s	METAL 3.9K 0.50% 1/16W
R76	1-218-675-11	s	CHIP, METAL 200 0.50% 1/16W

(DAP-5 BOARD)

Ref. No. or Q'ty	Part No.	SP	Description
R77	1-218-692-11	s	CHIP, METAL 1K 0.50% 1/16W
R78	1-218-716-11	s	METAL 10K 0.50% 1/16W
R79	1-218-675-11	s	CHIP, METAL 200 0.50% 1/16W
R80	1-218-692-11	s	CHIP, METAL 1K 0.50% 1/16W
R81	1-218-716-11	s	METAL 10K 0.50% 1/16W
R82	1-218-724-11	s	CHIP, METAL 22K 5% 1/16W
R83	1-218-743-11	s	METAL 130K 0.50% 1/16W
R84	1-218-706-11	s	METAL 3.9K 0.50% 1/16W
R85	1-218-668-11	s	CHIP, METAL 100 0.50% 1/16W
R86	1-218-675-11	s	CHIP, METAL 200 0.50% 1/16W
R87	1-218-692-11	s	CHIP, METAL 1K 0.50% 1/16W
R88	1-218-675-11	s	CHIP, METAL 200 0.50% 1/16W
R89	1-218-692-11	s	CHIP, METAL 1K 0.50% 1/16W
R90	1-218-716-11	s	METAL 10K 0.50% 1/16W
R91	1-218-692-11	s	CHIP, METAL 1K 0.50% 1/16W
R92	1-218-716-11	s	METAL 10K 0.50% 1/16W
R93	1-218-692-11	s	CHIP, METAL 1K 0.50% 1/16W
R94	1-218-675-11	s	CHIP, METAL 200 0.50% 1/16W
R95	1-218-675-11	s	CHIP, METAL 200 0.50% 1/16W
R96	1-218-724-11	s	CHIP, METAL 22K 5% 1/16W
R97	1-218-732-11	s	METAL 47K 0.50% 1/16W
R98	1-218-740-11	s	METAL 100K 0.50% 1/16W
R99	1-218-724-11	s	CHIP, METAL 22K 5% 1/16W
R100	1-218-740-11	s	METAL 100K 0.50% 1/16W
R101	1-218-716-11	s	METAL 10K 0.50% 1/16W
R102	1-218-716-11	s	METAL 10K 0.50% 1/16W
R103	1-218-716-11	s	METAL 10K 0.50% 1/16W
R104	1-218-716-11	s	METAL 10K 0.50% 1/16W
R105	1-218-724-11	s	CHIP, METAL 22K 5% 1/16W
R106	1-218-724-11	s	CHIP, METAL 22K 5% 1/16W
R107	1-218-716-11	s	METAL 10K 0.50% 1/16W
R108	1-218-668-11	s	CHIP, METAL 100 0.50% 1/16W
R109	1-218-691-11	s	CHIP, METAL 910 0.50% 1/16W
R110	1-218-691-11	s	CHIP, METAL 910 0.50% 1/16W
R111	1-218-740-11	s	METAL 100K 0.50% 1/16W
R112	1-218-691-11	s	CHIP, METAL 910 0.50% 1/16W
R113	1-218-716-11	s	METAL 10K 0.50% 1/16W
R114	1-218-664-11	s	CHIP, METAL 68 0.50% 1/16W
R115	1-218-691-11	s	CHIP, METAL 910 0.50% 1/16W
R116	1-218-668-11	s	CHIP, METAL 100 0.50% 1/16W
R117	1-218-710-11	s	CHIP, METAL 5.6K 0.50% 1/16W
R118	1-218-732-11	s	METAL 47K 0.50% 1/16W
R119	1-218-668-11	s	CHIP, METAL 100 0.50% 1/16W
R120	1-218-710-11	s	CHIP, METAL 5.6K 0.50% 1/16W
R121	1-218-668-11	s	CHIP, METAL 100 0.50% 1/16W
R123	1-218-716-11	s	METAL 10K 0.50% 1/16W
R124	1-218-716-11	s	METAL 10K 0.50% 1/16W
R125	1-218-716-11	s	METAL 10K 0.50% 1/16W
R126	1-218-716-11	s	METAL 10K 0.50% 1/16W
R128	1-218-699-11	s	CHIP, METAL 2K 0.50% 1/16W
R129	1-218-699-11	s	CHIP, METAL 2K 0.50% 1/16W
R130	1-218-740-11	s	METAL 100K 0.50% 1/16W
R131	1-218-656-11	s	CHIP, METAL 33 0.50% 1/16W
R132	1-218-724-11	s	CHIP, METAL 22K 5% 1/16W
R133	1-218-656-11	s	CHIP, METAL 33 0.50% 1/16W
R134	1-218-724-11	s	CHIP, METAL 22K 5% 1/16W
R135	1-218-716-11	s	METAL 10K 0.50% 1/16W
R136	1-218-699-11	s	CHIP, METAL 2K 0.50% 1/16W
R137	1-218-716-11	s	METAL 10K 0.50% 1/16W

(DAP-5 BOARD)

Ref. No. or Q'ty	Part No.	SP	Description
R138	1-218-724-11	s	CHIP, METAL 22K 5% 1/16W
R139	1-218-724-11	s	CHIP, METAL 22K 5% 1/16W
R140	1-218-656-11	s	CHIP, METAL 33 0.50% 1/16W
R141	1-218-656-11	s	CHIP, METAL 33 0.50% 1/16W
R142	1-218-708-11	s	METAL 4.7K 0.50% 1/16W
R143	1-218-740-11	s	METAL 100K 0.50% 1/16W
R144	1-216-863-11	s	METAL 3.3M 5% 1/16W
R145	1-218-692-11	s	CHIP, METAL 1K 0.50% 1/16W
R146	1-218-668-11	s	CHIP, METAL 100 0.50% 1/16W
R148	1-218-740-11	s	METAL 100K 0.50% 1/16W
R151	1-218-699-11	s	CHIP, METAL 2K 0.50% 1/16W
R152	1-218-740-11	s	METAL 100K 0.50% 1/16W
R154	1-218-748-11	s	CHIP, METAL 220K 0.50% 1/16W
R158	1-218-741-11	s	METAL 110K 0.50% 1/16W
R159	1-216-854-11	s	METAL, CHIP 560K 5% 1/16W
R160	1-218-716-11	s	METAL 10K 0.50% 1/16W
R161	1-218-692-11	s	CHIP, METAL 1K 0.50% 1/16W
R162	1-218-644-11	s	METAL 10 0.50% 1/16W
R163	1-218-644-11	s	METAL 10 0.50% 1/16W
R164	1-218-644-11	s	METAL 10 0.50% 1/16W
R165	1-218-692-11	s	CHIP, METAL 1K 0.50% 1/16W
R166	1-218-692-11	s	CHIP, METAL 1K 0.50% 1/16W
R167	1-218-716-11	s	METAL 10K 0.50% 1/16W
R168	1-218-644-11	s	METAL 10 0.50% 1/16W
R169	1-218-644-11	s	METAL 10 0.50% 1/16W
R170	1-218-724-11	s	CHIP, METAL 22K 5% 1/16W
R171	1-218-644-11	s	METAL 10 0.50% 1/16W
R172	1-218-692-11	s	CHIP, METAL 1K 0.50% 1/16W
R173	1-218-644-11	s	METAL 10 0.50% 1/16W
R174	1-218-644-11	s	METAL 10 0.50% 1/16W
R175	1-218-748-11	s	CHIP, METAL 220K 0.50% 1/16W
R176	1-218-692-11	s	CHIP, METAL 1K 0.50% 1/16W
R177	1-218-692-11	s	CHIP, METAL 1K 0.50% 1/16W
R178	1-218-724-11	s	CHIP, METAL 22K 5% 1/16W
R179	1-218-748-11	s	CHIP, METAL 220K 0.50% 1/16W
R180	1-218-685-11	s	METAL 510 0.50% 1/16W
R181	1-218-716-11	s	METAL 10K 0.50% 1/16W
R182	1-218-706-11	s	METAL 3.9K 0.50% 1/16W
R183	1-218-711-11	s	METAL 6.2K 0.50% 1/16W
R184	1-218-740-11	s	METAL 100K 0.50% 1/16W
R185	1-218-740-11	s	METAL 100K 0.50% 1/16W
R186	1-218-740-11	s	METAL 100K 0.50% 1/16W
R187	1-218-740-11	s	METAL 100K 0.50% 1/16W
R188	1-218-740-11	s	METAL 100K 0.50% 1/16W
R189	1-218-740-11	s	METAL 100K 0.50% 1/16W
R190	1-218-740-11	s	METAL 100K 0.50% 1/16W
R191	1-218-740-11	s	METAL 100K 0.50% 1/16W
R192	1-218-644-11	s	METAL 10 0.50% 1/16W
R193	1-218-644-11	s	METAL 10 0.50% 1/16W
R194	1-218-644-11	s	METAL 10 0.50% 1/16W
R195	1-218-706-11	s	METAL 3.9K 0.50% 1/16W
R196	1-218-711-11	s	METAL 6.2K 0.50% 1/16W
R197	1-218-644-11	s	METAL 10 0.50% 1/16W
R198	1-218-644-11	s	METAL 10 0.50% 1/16W
R199	1-218-644-11	s	METAL 10 0.50% 1/16W
R200	1-218-644-11	s	METAL 10 0.50% 1/16W
R201	1-218-733-11	s	CHIP, METAL 51K 0.50% 1/16W
R202	1-218-644-11	s	METAL 10 0.50% 1/16W
R203	1-218-644-11	s	METAL 10 0.50% 1/16W

(DAP-5 BOARD)

Ref. No. or Q'ty	Part No.	SP	Description
R204	1-218-685-11	s	METAL 510 0.50% 1/16W
R205	1-218-748-11	s	CHIP, METAL 220K 0.50% 1/16W
R206	1-218-692-11	s	CHIP, METAL 1K 0.50% 1/16W
R207	1-218-740-11	s	METAL 100K 0.50% 1/16W
R208	1-218-692-11	s	CHIP, METAL 1K 0.50% 1/16W
R209	1-218-736-11	s	METAL 68K 0.50% 1/16W
R210	1-218-692-11	s	CHIP, METAL 1K 0.50% 1/16W
R211	1-218-749-11	s	CHIP, METAL 240K 0.50% 1/16W
R212	1-218-692-11	s	CHIP, METAL 1K 0.50% 1/16W
R213	1-218-692-11	s	CHIP, METAL 1K 0.50% 1/16W
R214	1-218-708-11	s	METAL 4.7K 0.50% 1/16W
R215	1-218-700-11	s	METAL 2.2K 0.50% 1/16W
R216	1-218-728-11	s	METAL 33K 0.50% 1/16W
R217	1-218-740-11	s	METAL 100K 0.50% 1/16W
R218	1-218-748-11	s	CHIP, METAL 220K 0.50% 1/16W
R220	1-218-740-11	s	METAL 100K 0.50% 1/16W
R221	1-218-740-11	s	METAL 100K 0.50% 1/16W
R222	1-218-668-11	s	CHIP, METAL 100 0.50% 1/16W
R223	1-218-668-11	s	CHIP, METAL 100 0.50% 1/16W
R225	1-218-668-11	s	CHIP, METAL 100 0.50% 1/16W
R226	1-218-668-11	s	CHIP, METAL 100 0.50% 1/16W
R227	1-218-692-11	s	CHIP, METAL 1K 0.50% 1/16W
R228	1-218-644-11	s	METAL 10 0.50% 1/16W
R229	1-218-728-11	s	METAL 33K 0.50% 1/16W
R230	1-218-644-11	s	METAL 10 0.50% 1/16W
R231	1-218-737-11	s	CHIP, METAL 75K 0.50% 1/16W
R232	1-218-740-11	s	METAL 100K 0.50% 1/16W
R233	1-218-740-11	s	METAL 100K 0.50% 1/16W
R234	1-218-644-11	s	METAL 10 0.50% 1/16W
R236	1-218-732-11	s	METAL 47K 0.50% 1/16W
R237	1-218-644-11	s	METAL 10 0.50% 1/16W
R238	1-218-740-11	s	METAL 100K 0.50% 1/16W
R239	1-218-644-11	s	METAL 10 0.50% 1/16W
R240	1-216-659-11	s	METAL, CHIP 2.2K 0.5% 1/10W
R241	1-216-659-11	s	METAL, CHIP 2.2K 0.5% 1/10W
R242	1-218-740-11	s	METAL 100K 0.50% 1/16W
R243	1-218-740-11	s	METAL 100K 0.50% 1/16W
R244	1-218-740-11	s	METAL 100K 0.50% 1/16W
R245	1-218-725-11	s	METAL 24K 0.50% 1/16W
R246	1-218-692-11	s	CHIP, METAL 1K 0.50% 1/16W
R247	1-218-644-11	s	METAL 10 0.50% 1/16W
R248	1-218-692-11	s	CHIP, METAL 1K 0.50% 1/16W
R249	1-218-644-11	s	METAL 10 0.50% 1/16W
R250	1-218-644-11	s	METAL 10 0.50% 1/16W
R251	1-218-668-11	s	CHIP, METAL 100 0.50% 1/16W
R252	1-218-644-11	s	METAL 10 0.50% 1/16W
R253	1-218-668-11	s	CHIP, METAL 100 0.50% 1/16W
R254	1-218-644-11	s	METAL 10 0.50% 1/16W
R255	1-218-644-11	s	METAL 10 0.50% 1/16W
R256	1-218-668-11	s	CHIP, METAL 100 0.50% 1/16W
R257	1-218-644-11	s	METAL 10 0.50% 1/16W
R258	1-218-644-11	s	METAL 10 0.50% 1/16W
R260	1-218-692-11	s	CHIP, METAL 1K 0.50% 1/16W
R261	1-218-644-11	s	METAL 10 0.50% 1/16W
R262	1-218-728-11	s	METAL 33K 0.50% 1/16W
R263	1-218-644-11	s	METAL 10 0.50% 1/16W
R264	1-218-644-11	s	METAL 10 0.50% 1/16W
R266	1-218-732-11	s	METAL 47K 0.50% 1/16W
R267	1-218-644-11	s	METAL 10 0.50% 1/16W

(DAP-5 BOARD)

Ref. No. or Q'ty	Part No.	SP	Description
R268	1-218-644-11	s	METAL 10 0.50% 1/16W
R269	1-218-716-11	s	METAL 10K 0.50% 1/16W
R270	1-218-740-11	s	METAL 100K 0.50% 1/16W
R271	1-218-740-11	s	METAL 100K 0.50% 1/16W
R272	1-218-740-11	s	METAL 100K 0.50% 1/16W
R273	1-218-740-11	s	METAL 100K 0.50% 1/16W
R274	1-218-644-11	s	METAL 10 0.50% 1/16W
R275	1-218-644-11	s	METAL 10 0.50% 1/16W
R276	1-218-644-11	s	METAL 10 0.50% 1/16W
R277	1-218-644-11	s	METAL 10 0.50% 1/16W
R278	1-218-644-11	s	METAL 10 0.50% 1/16W
R279	1-218-644-11	s	METAL 10 0.50% 1/16W
R280	1-218-644-11	s	METAL 10 0.50% 1/16W
R281	1-218-644-11	s	METAL 10 0.50% 1/16W
R282	1-218-644-11	s	METAL 10 0.50% 1/16W
R283	1-218-644-11	s	METAL 10 0.50% 1/16W
R284	1-218-644-11	s	METAL 10 0.50% 1/16W
R285	1-218-644-11	s	METAL 10 0.50% 1/16W
R286	1-218-704-11	s	METAL 3.3K 0.50% 1/16W
R287	1-218-710-11	s	CHIP, METAL 5.6K 0.50% 1/16W

DL-65 BOARD

Ref. No. or Q'ty	Part No.	SP	Description
1pc	A-8273-223-A	o	MOUNTED CIRCUIT BOARD, DL-65
1pc	3-602-409-01	o	PANEL,DL-65 PC BOARD
1pc	3-724-753-01	o	RING
5pcs	3-729-061-01	s	SCREW (M2X4.5) (TYPE 1)
C1	1-162-970-11	s	CERAMIC, CHIP 0.01uF 10% 25V
C2	1-162-970-11	s	CERAMIC, CHIP 0.01uF 10% 25V
C3	1-162-927-11	s	CERAMIC, CHIP 100PF 5% 50V
C4	1-164-156-11	s	CERAMIC 0.1uF 25V
C5	1-162-970-11	s	CERAMIC, CHIP 0.01uF 10% 25V
C6	1-162-970-11	s	CERAMIC, CHIP 0.01uF 10% 25V
C7	1-164-156-11	s	CERAMIC 0.1uF 25V
C8	1-135-177-21	s	TANTALUM, CHIP 1uF 10% 25V
C9	1-135-177-21	s	TANTALUM, CHIP 1uF 10% 25V
C10	1-162-927-11	s	CERAMIC, CHIP 100PF 5% 50V
C11	1-162-927-11	s	CERAMIC, CHIP 100PF 5% 50V
C14	1-104-823-11	s	TANTALUM, CHIP 47uF 20% 16V
C15	1-104-823-11	s	TANTALUM, CHIP 47uF 20% 16V
C16	1-164-156-11	s	CERAMIC 0.1uF 25V
C17	1-164-156-11	s	CERAMIC 0.1uF 25V
C18	1-104-823-11	s	TANTALUM, CHIP 47uF 20% 16V
C19	1-164-156-11	s	CERAMIC 0.1uF 25V
C20	1-162-915-11	s	CERAMIC, CHIP 10PF 5PF 50V
C21	1-162-915-11	s	CERAMIC, CHIP 10PF 5PF 50V
C22	1-162-915-11	s	CERAMIC, CHIP 10PF 5PF 50V
C23	1-162-970-11	s	CERAMIC, CHIP 0.01uF 10% 25V
C24	1-164-156-11	s	CERAMIC 0.1uF 25V
C103	1-164-156-11	s	CERAMIC 0.1uF 25V
C104	1-162-970-11	s	CERAMIC, CHIP 0.01uF 10% 25V
C105	1-162-970-11	s	CERAMIC, CHIP 0.01uF 10% 25V
C106	1-162-908-11	s	CERAMIC 3PF 0.25PF 50V
C107	1-162-927-11	s	CERAMIC, CHIP 100PF 5% 50V
C108	1-104-851-11	s	TANTALUM, CHIP 10uF 20% 10V
C109	1-104-851-11	s	TANTALUM, CHIP 10uF 20% 10V
C113	1-162-970-11	s	CERAMIC, CHIP 0.01uF 10% 25V
C114	1-162-970-11	s	CERAMIC, CHIP 0.01uF 10% 25V
C115	1-162-905-11	s	CERAMIC 1PF 0.25PF 50V
C116	1-162-927-11	s	CERAMIC, CHIP 100PF 5% 50V
C117	1-135-259-11	s	TANTALUM, CHIP 10uF 20% 6.3
C118	1-162-970-11	s	CERAMIC, CHIP 0.01uF 10% 25V
C119	1-162-970-11	s	CERAMIC, CHIP 0.01uF 10% 25V
C120	1-162-970-11	s	CERAMIC, CHIP 0.01uF 10% 25V
C121	1-162-970-11	s	CERAMIC, CHIP 0.01uF 10% 25V
C122	1-162-970-11	s	CERAMIC, CHIP 0.01uF 10% 25V
C123	1-162-970-11	s	CERAMIC, CHIP 0.01uF 10% 25V
C124	1-162-970-11	s	CERAMIC, CHIP 0.01uF 10% 25V
C125	1-162-970-11	s	CERAMIC, CHIP 0.01uF 10% 25V
C126	1-162-970-11	s	CERAMIC, CHIP 0.01uF 10% 25V
C127	1-162-970-11	s	CERAMIC, CHIP 0.01uF 10% 25V
C128	1-162-970-11	s	CERAMIC, CHIP 0.01uF 10% 25V
C129	1-162-970-11	s	CERAMIC, CHIP 0.01uF 10% 25V
C130	1-162-970-11	s	CERAMIC, CHIP 0.01uF 10% 25V
C131	1-162-970-11	s	CERAMIC, CHIP 0.01uF 10% 25V
C140	1-162-970-11	s	CERAMIC, CHIP 0.01uF 10% 25V
C141	1-162-970-11	s	CERAMIC, CHIP 0.01uF 10% 25V
C142	1-162-970-11	s	CERAMIC, CHIP 0.01uF 10% 25V
C143	1-162-970-11	s	CERAMIC, CHIP 0.01uF 10% 25V
C146	1-162-970-11	s	CERAMIC, CHIP 0.01uF 10% 25V
C147	1-162-970-11	s	CERAMIC, CHIP 0.01uF 10% 25V
C148	1-164-156-11	s	CERAMIC 0.1uF 25V

(DL-65 BOARD)

Ref. No. or Q'ty	Part No.	SP	Description
C149	1-162-970-11	s	CERAMIC, CHIP 0.01uF 10% 25V
C150	1-164-156-11	s	CERAMIC 0.1uF 25V
C151	1-164-156-11	s	CERAMIC 0.1uF 25V
C152	1-104-851-11	s	TANTALUM, CHIP 10uF 20% 10V
C153	1-104-851-11	s	TANTALUM, CHIP 10uF 20% 10V
C154	1-162-970-11	s	CERAMIC, CHIP 0.01uF 10% 25V
C155	1-162-970-11	s	CERAMIC, CHIP 0.01uF 10% 25V
C157	1-162-927-11	s	CERAMIC, CHIP 100PF 5% 50V
C160	1-162-970-11	s	CERAMIC, CHIP 0.01uF 10% 25V
C161	1-162-970-11	s	CERAMIC, CHIP 0.01uF 10% 25V
C303	1-164-156-11	s	CERAMIC 0.1uF 25V
C304	1-162-970-11	s	CERAMIC, CHIP 0.01uF 10% 25V
C305	1-162-970-11	s	CERAMIC, CHIP 0.01uF 10% 25V
C306	1-162-908-11	s	CERAMIC 3PF 0.25PF 50V
C307	1-162-927-11	s	CERAMIC, CHIP 100PF 5% 50V
C308	1-162-970-11	s	CERAMIC, CHIP 0.01uF 10% 25V
C309	1-104-851-11	s	TANTALUM, CHIP 10uF 20% 10V
C310	1-104-851-11	s	TANTALUM, CHIP 10uF 20% 10V
C311	1-162-970-11	s	CERAMIC, CHIP 0.01uF 10% 25V
C313	1-162-970-11	s	CERAMIC, CHIP 0.01uF 10% 25V
C314	1-162-970-11	s	CERAMIC, CHIP 0.01uF 10% 25V
C315	1-162-905-11	s	CERAMIC 1PF 0.25PF 50V
C316	1-135-259-11	s	TANTALUM, CHIP 10uF 20% 6.3
C317	1-162-927-11	s	CERAMIC, CHIP 100PF 5% 50V
C318	1-162-970-11	s	CERAMIC, CHIP 0.01uF 10% 25V
C319	1-162-970-11	s	CERAMIC, CHIP 0.01uF 10% 25V
C320	1-162-970-11	s	CERAMIC, CHIP 0.01uF 10% 25V
C321	1-162-970-11	s	CERAMIC, CHIP 0.01uF 10% 25V
C322	1-162-970-11	s	CERAMIC, CHIP 0.01uF 10% 25V
C323	1-162-970-11	s	CERAMIC, CHIP 0.01uF 10% 25V
C324	1-162-970-11	s	CERAMIC, CHIP 0.01uF 10% 25V
C325	1-162-970-11	s	CERAMIC, CHIP 0.01uF 10% 25V
C326	1-162-970-11	s	CERAMIC, CHIP 0.01uF 10% 25V
C327	1-162-970-11	s	CERAMIC, CHIP 0.01uF 10% 25V
C328	1-162-970-11	s	CERAMIC, CHIP 0.01uF 10% 25V
C329	1-162-970-11	s	CERAMIC, CHIP 0.01uF 10% 25V
C330	1-162-970-11	s	CERAMIC, CHIP 0.01uF 10% 25V
C331	1-162-970-11	s	CERAMIC, CHIP 0.01uF 10% 25V
C344	1-162-970-11	s	CERAMIC, CHIP 0.01uF 10% 25V
C345	1-162-970-11	s	CERAMIC, CHIP 0.01uF 10% 25V
C346	1-162-970-11	s	CERAMIC, CHIP 0.01uF 10% 25V
C347	1-162-970-11	s	CERAMIC, CHIP 0.01uF 10% 25V
C348	1-162-970-11	s	CERAMIC, CHIP 0.01uF 10% 25V
C349	1-162-970-11	s	CERAMIC, CHIP 0.01uF 10% 25V
C350	1-162-970-11	s	CERAMIC, CHIP 0.01uF 10% 25V
C351	1-162-970-11	s	CERAMIC, CHIP 0.01uF 10% 25V
C356	1-162-970-11	s	CERAMIC, CHIP 0.01uF 10% 25V
C357	1-162-970-11	s	CERAMIC, CHIP 0.01uF 10% 25V
C358	1-162-970-11	s	CERAMIC, CHIP 0.01uF 10% 25V
C359	1-162-970-11	s	CERAMIC, CHIP 0.01uF 10% 25V
C360	1-164-156-11	s	CERAMIC 0.1uF 25V
C361	1-164-156-11	s	CERAMIC 0.1uF 25V
C362	1-162-970-11	s	CERAMIC, CHIP 0.01uF 10% 25V
C363	1-162-970-11	s	CERAMIC, CHIP 0.01uF 10% 25V
C364	1-164-156-11	s	CERAMIC 0.1uF 25V
C365	1-164-156-11	s	CERAMIC 0.1uF 25V
C366	1-164-156-11	s	CERAMIC 0.1uF 25V
C367	1-164-156-11	s	CERAMIC 0.1uF 25V
C368	1-104-851-11	s	TANTALUM, CHIP 10uF 20% 10V

http://getMANUAL.com

(DL-65 BOARD)

Ref. No. or Q'ty	Part No.	SP	Description
C369	1-104-851-11	s	TANTALUM, CHIP 10uF 20% 10V
C370	1-162-970-11	s	CERAMIC, CHIP 0.01uF 10% 25V
C371	1-162-970-11	s	CERAMIC, CHIP 0.01uF 10% 25V
C372	1-162-970-11	s	CERAMIC, CHIP 0.01uF 10% 25V
C373	1-162-970-11	s	CERAMIC, CHIP 0.01uF 10% 25V
C376	1-162-927-11	s	CERAMIC, CHIP 100PF 5% 50V
C377	1-162-927-11	s	CERAMIC, CHIP 100PF 5% 50V
C378	1-104-851-11	s	TANTALUM, CHIP 10uF 20% 10V
C503	1-164-156-11	s	CERAMIC 0.1uF 25V
C504	1-162-970-11	s	CERAMIC, CHIP 0.01uF 10% 25V
C505	1-162-970-11	s	CERAMIC, CHIP 0.01uF 10% 25V
C506	1-162-908-11	s	CERAMIC 3PF 0.25PF 50V
C507	1-162-927-11	s	CERAMIC, CHIP 100PF 5% 50V
C508	1-162-970-11	s	CERAMIC, CHIP 0.01uF 10% 25V
C509	1-104-851-11	s	TANTALUM, CHIP 10uF 20% 10V
C510	1-104-851-11	s	TANTALUM, CHIP 10uF 20% 10V
C511	1-162-970-11	s	CERAMIC, CHIP 0.01uF 10% 25V
C513	1-162-970-11	s	CERAMIC, CHIP 0.01uF 10% 25V
C514	1-162-970-11	s	CERAMIC, CHIP 0.01uF 10% 25V
C515	1-162-905-11	s	CERAMIC 1PF 0.25PF 50V
C516	1-135-259-11	s	TANTALUM, CHIP 10uF 20% 6.3
C517	1-162-927-11	s	CERAMIC, CHIP 100PF 5% 50V
C518	1-162-970-11	s	CERAMIC, CHIP 0.01uF 10% 25V
C519	1-162-970-11	s	CERAMIC, CHIP 0.01uF 10% 25V
C520	1-162-970-11	s	CERAMIC, CHIP 0.01uF 10% 25V
C521	1-162-970-11	s	CERAMIC, CHIP 0.01uF 10% 25V
C522	1-162-970-11	s	CERAMIC, CHIP 0.01uF 10% 25V
C523	1-162-970-11	s	CERAMIC, CHIP 0.01uF 10% 25V
C524	1-162-970-11	s	CERAMIC, CHIP 0.01uF 10% 25V
C525	1-162-970-11	s	CERAMIC, CHIP 0.01uF 10% 25V
C526	1-162-970-11	s	CERAMIC, CHIP 0.01uF 10% 25V
C527	1-162-970-11	s	CERAMIC, CHIP 0.01uF 10% 25V
C528	1-162-970-11	s	CERAMIC, CHIP 0.01uF 10% 25V
C529	1-162-970-11	s	CERAMIC, CHIP 0.01uF 10% 25V
C530	1-162-970-11	s	CERAMIC, CHIP 0.01uF 10% 25V
C531	1-162-970-11	s	CERAMIC, CHIP 0.01uF 10% 25V
C540	1-162-970-11	s	CERAMIC, CHIP 0.01uF 10% 25V
C541	1-162-970-11	s	CERAMIC, CHIP 0.01uF 10% 25V
C542	1-162-970-11	s	CERAMIC, CHIP 0.01uF 10% 25V
C543	1-162-970-11	s	CERAMIC, CHIP 0.01uF 10% 25V
C546	1-162-970-11	s	CERAMIC, CHIP 0.01uF 10% 25V
C547	1-162-970-11	s	CERAMIC, CHIP 0.01uF 10% 25V
C548	1-164-156-11	s	CERAMIC 0.1uF 25V
C549	1-162-970-11	s	CERAMIC, CHIP 0.01uF 10% 25V
C550	1-164-156-11	s	CERAMIC 0.1uF 25V
C551	1-164-156-11	s	CERAMIC 0.1uF 25V
C552	1-104-851-11	s	TANTALUM, CHIP 10uF 20% 10V
C553	1-104-851-11	s	TANTALUM, CHIP 10uF 20% 10V
C554	1-162-970-11	s	CERAMIC, CHIP 0.01uF 10% 25V
C555	1-162-970-11	s	CERAMIC, CHIP 0.01uF 10% 25V
C557	1-162-927-11	s	CERAMIC, CHIP 100PF 5% 50V
C558	1-104-851-11	s	TANTALUM, CHIP 10uF 20% 10V
C701	1-162-915-11	s	CERAMIC, CHIP 10PF 5PF 50V
C702	1-162-915-11	s	CERAMIC, CHIP 10PF 5PF 50V
C703	1-162-970-11	s	CERAMIC, CHIP 0.01uF 10% 25V
C704	1-162-970-11	s	CERAMIC, CHIP 0.01uF 10% 25V
C705	1-162-905-11	s	CERAMIC 1PF 0.25PF 50V
C706	1-162-927-11	s	CERAMIC, CHIP 100PF 5% 50V
C707	1-104-851-11	s	TANTALUM, CHIP 10uF 20% 10V

(DL-65 BOARD)

Ref. No. or Q'ty	Part No.	SP	Description
C708	1-104-851-11	s	TANTALUM, CHIP 10uF 20% 10V
C709	1-162-970-11	s	CERAMIC, CHIP 0.01uF 10% 25V
C710	1-162-970-11	s	CERAMIC, CHIP 0.01uF 10% 25V
C711	1-162-905-11	s	CERAMIC 1PF 0.25PF 50V
C712	1-162-927-11	s	CERAMIC, CHIP 100PF 5% 50V
C713	1-135-177-21	s	TANTALUM, CHIP 1uF 10% 25V
C714	1-164-156-11	s	CERAMIC 0.1uF 25V
C715	1-135-177-21	s	TANTALUM, CHIP 1uF 10% 25V
C716	1-164-156-11	s	CERAMIC 0.1uF 25V
C717	1-135-177-21	s	TANTALUM, CHIP 1uF 10% 25V
C718	1-162-970-11	s	CERAMIC, CHIP 0.01uF 10% 25V
C719	1-162-970-11	s	CERAMIC, CHIP 0.01uF 10% 25V
C720	1-104-851-11	s	TANTALUM, CHIP 10uF 20% 10V
C722	1-162-927-11	s	CERAMIC, CHIP 100PF 5% 50V
C723	1-164-156-11	s	CERAMIC 0.1uF 25V
C724	1-164-156-11	s	CERAMIC 0.1uF 25V
C725	1-104-851-11	s	TANTALUM, CHIP 10uF 20% 10V
C726	1-164-156-11	s	CERAMIC 0.1uF 25V
C727	1-135-177-21	s	TANTALUM, CHIP 1uF 10% 25V
C728	1-164-156-11	s	CERAMIC 0.1uF 25V
C729	1-135-177-21	s	TANTALUM, CHIP 1uF 10% 25V
C730	1-164-156-11	s	CERAMIC 0.1uF 25V
C731	1-135-177-21	s	TANTALUM, CHIP 1uF 10% 25V
C732	1-162-970-11	s	CERAMIC, CHIP 0.01uF 10% 25V
C733	1-162-970-11	s	CERAMIC, CHIP 0.01uF 10% 25V
C734	1-104-851-11	s	TANTALUM, CHIP 10uF 20% 10V
C736	1-162-927-11	s	CERAMIC, CHIP 100PF 5% 50V
C737	1-104-851-11	s	TANTALUM, CHIP 10uF 20% 10V
C738	1-164-156-11	s	CERAMIC 0.1uF 25V
C739	1-104-851-11	s	TANTALUM, CHIP 10uF 20% 10V
C741	1-164-156-11	s	CERAMIC 0.1uF 25V
C742	1-164-156-11	s	CERAMIC 0.1uF 25V
C744	1-164-156-11	s	CERAMIC 0.1uF 25V
CN1	1-695-453-11	s	CONNECTOR, BOARD TO BOARD 50P
D703	8-719-421-27	s	DIODE MA728
DL1	1-415-886-11	s	DELAY LINE
FL101	1-233-603-21	s	FILTER (SMD), LOW PASS
FL301	1-233-603-21	s	FILTER (SMD), LOW PASS
FL303	1-233-603-21	s	FILTER (SMD), LOW PASS
FL501	1-233-603-21	s	FILTER (SMD), LOW PASS
IC1	8-759-054-61	s	IC CLC505AJE
IC2	8-759-386-71	s	IC TC74AC86FS(EL)
IC3	8-759-258-51	s	IC TC74AC74FS(EL)
IC4	8-759-185-42	s	IC LM4040AIM3-2.5
IC5	8-759-173-16	s	IC TL062CPW
IC6	8-759-082-60	s	IC TC7S66FU
IC7	8-759-349-47	s	IC TLC393CPW-E05
IC101	8-759-054-61	s	IC CLC505AJE
IC102	8-759-173-16	s	IC TL062CPW
IC103	8-759-054-61	s	IC CLC505AJE
IC104	8-759-347-04	s	IC SPT7860SCT
IC105	8-759-347-04	s	IC SPT7860SCT
IC106	8-752-360-44	s	IC CXK1203AR
IC107	8-752-360-44	s	IC CXK1203AR
IC108	8-752-375-98	s	IC CXD2315Q
IC109	8-759-054-61	s	IC CLC505AJE

(DL-65 BOARD)

Ref. No. or Q'ty	Part No.	SP	Description
IC301	8-759-054-61	s	IC CLC505AJE
IC302	8-759-173-16	s	IC TL062CPW
IC303	8-759-054-61	s	IC CLC505AJE
IC304	8-759-347-04	s	IC SPT7860SCT
IC305	8-759-347-04	s	IC SPT7860SCT
IC306	8-752-360-44	s	IC CXK1203AR
IC307	8-752-360-44	s	IC CXK1203AR
IC308	8-752-375-98	s	IC CXD2315Q
IC309	8-759-054-61	s	IC CLC505AJE
IC310	8-752-360-44	s	IC CXK1203AR
IC311	8-752-360-44	s	IC CXK1203AR
IC312	8-752-375-98	s	IC CXD2315Q
IC313	8-759-054-61	s	IC CLC505AJE
IC501	8-759-054-61	s	IC CLC505AJE
IC502	8-759-173-16	s	IC TL062CPW
IC503	8-759-054-61	s	IC CLC505AJE
IC504	8-759-347-04	s	IC SPT7860SCT
IC505	8-759-347-04	s	IC SPT7860SCT
IC506	8-752-360-44	s	IC CXK1203AR
IC507	8-752-360-44	s	IC CXK1203AR
IC508	8-752-375-98	s	IC CXD2315Q
IC509	8-759-054-61	s	IC CLC505AJE
IC700	8-759-058-62	s	IC TC7S08FU(TE85R)
IC701	8-759-054-61	s	IC CLC505AJE
IC702	8-759-054-61	s	IC CLC505AJE
IC703	8-759-271-18	s	IC NJM1496V
IC704	8-759-271-18	s	IC NJM1496V
IC705	8-759-054-61	s	IC CLC505AJE
IC706	8-759-173-16	s	IC TL062CPW
IC707	8-759-066-59	s	IC TC74HC4053AFS
IC708	8-759-271-18	s	IC NJM1496V
IC709	8-759-271-18	s	IC NJM1496V
IC710	8-759-054-61	s	IC CLC505AJE
IC711	8-759-064-36	s	IC MB88346BPFV
IC712	8-759-058-62	s	IC TC7S08FU(TE85R)
IC713	8-759-147-84	s	IC CXD8072Q
IC714	8-759-086-41	s	IC X24C02S-3.0
IC715	8-759-058-55	s	IC TC7S02FU-TE85L
L1	1-412-390-21	s	INDUCTOR CHIP 0uH
L11	1-412-390-21	s	INDUCTOR CHIP 0uH
L12	1-412-390-21	s	INDUCTOR CHIP 0uH
L101	1-412-390-21	s	INDUCTOR CHIP 0uH
L102	1-412-390-21	s	INDUCTOR CHIP 0uH
L107	1-412-390-21	s	INDUCTOR CHIP 0uH
L108	1-412-390-21	s	INDUCTOR CHIP 0uH
L110	1-412-390-21	s	INDUCTOR CHIP 0uH
L301	1-412-390-21	s	INDUCTOR CHIP 0uH
L302	1-412-390-21	s	INDUCTOR CHIP 0uH
L309	1-412-390-21	s	INDUCTOR CHIP 0uH
L310	1-412-390-21	s	INDUCTOR CHIP 0uH
L311	1-412-390-21	s	INDUCTOR CHIP 0uH
L312	1-412-390-21	s	INDUCTOR CHIP 0uH
L315	1-412-390-21	s	INDUCTOR CHIP 0uH
L316	1-412-390-21	s	INDUCTOR CHIP 0uH
L501	1-412-390-21	s	INDUCTOR CHIP 0uH
L502	1-412-390-21	s	INDUCTOR CHIP 0uH
L507	1-412-390-21	s	INDUCTOR CHIP 0uH
L508	1-412-390-21	s	INDUCTOR CHIP 0uH

(DL-65 BOARD)

Ref. No. or Q'ty	Part No.	SP	Description
L510	1-412-390-21	s	INDUCTOR CHIP 0uH
Q1	8-729-820-86	s	TRANSISTOR 2SB1121-ST
Q2	8-729-117-32	s	TRANSISTOR 2SC4177
Q3	8-729-117-16	s	TRANSISTOR 2SA1611-M6
Q4	8-729-820-90	s	TRANSISTOR 2SD1621-ST
Q5	8-729-143-07	s	TRANSISTOR 2SA1610-Y33
Q6	8-729-143-07	s	TRANSISTOR 2SA1610-Y33
Q7	8-729-143-07	s	TRANSISTOR 2SA1610-Y33
Q8	8-729-143-14	s	TRANSISTOR 2SC4176-B35
Q106	8-729-143-07	s	TRANSISTOR 2SA1610-Y33
Q107	8-729-143-07	s	TRANSISTOR 2SA1610-Y33
Q108	8-729-143-14	s	TRANSISTOR 2SC4176-B35
Q109	8-729-117-32	s	TRANSISTOR 2SC4177
Q306	8-729-143-07	s	TRANSISTOR 2SA1610-Y33
Q307	8-729-143-07	s	TRANSISTOR 2SA1610-Y33
Q308	8-729-143-14	s	TRANSISTOR 2SC4176-B35
Q309	8-729-117-32	s	TRANSISTOR 2SC4177
Q506	8-729-143-07	s	TRANSISTOR 2SA1610-Y33
Q507	8-729-143-07	s	TRANSISTOR 2SA1610-Y33
Q508	8-729-143-14	s	TRANSISTOR 2SC4176-B35
Q509	8-729-117-32	s	TRANSISTOR 2SC4177
Q701	8-729-143-14	s	TRANSISTOR 2SC4176-B35
Q702	8-729-143-14	s	TRANSISTOR 2SC4176-B35
Q703	8-729-143-14	s	TRANSISTOR 2SC4176-B35
Q704	8-729-928-90	s	TRANSISTOR DTC114EE
Q705	8-729-143-07	s	TRANSISTOR 2SA1610-Y33
Q706	8-729-143-07	s	TRANSISTOR 2SA1610-Y33
Q707	8-729-143-14	s	TRANSISTOR 2SC4176-B35
Q708	8-729-928-90	s	TRANSISTOR DTC114EE
Q709	8-729-928-90	s	TRANSISTOR DTC114EE
Q710	8-729-143-14	s	TRANSISTOR 2SC4176-B35
R1	1-218-692-11	s	CHIP, METAL 1K 0.50% 1/16W
R2	1-218-692-11	s	CHIP, METAL 1K 0.50% 1/16W
R3	1-218-692-11	s	CHIP, METAL 1K 0.50% 1/16W
R4	1-218-692-11	s	CHIP, METAL 1K 0.50% 1/16W
R5	1-218-745-11	s	CHIP, METAL 160K 0.50% 1/16W
R8	1-216-857-11	s	METAL, CHIP 1M 5% 1/16W
R9	1-218-668-11	s	CHIP, METAL 100 0.50% 1/16W
R11	1-216-864-11	s	METAL, CHIP 0 5% 1/16W
R14	1-216-864-11	s	METAL, CHIP 0 5% 1/16W
R16	1-218-699-11	s	CHIP, METAL 2K 0.50% 1/16W
R17	1-218-701-11	s	METAL 2.4K 0.50% 1/16W
R18	1-218-724-11	s	CHIP, METAL 22K 5% 1/16W
R19	1-218-724-11	s	CHIP, METAL 22K 5% 1/16W
R20	1-218-716-11	s	METAL 10K 0.50% 1/16W
R21	1-218-716-11	s	METAL 10K 0.50% 1/16W
R22	1-218-700-11	s	METAL 2.2K 0.50% 1/16W
R23	1-218-700-11	s	METAL 2.2K 0.50% 1/16W
R24	1-218-700-11	s	METAL 2.2K 0.50% 1/16W
R25	1-218-700-11	s	METAL 2.2K 0.50% 1/16W
R26	1-218-675-11	s	CHIP, METAL 200 0.50% 1/16W
R27	1-218-675-11	s	CHIP, METAL 200 0.50% 1/16W
R28	1-218-675-11	s	CHIP, METAL 200 0.50% 1/16W
R29	1-218-675-11	s	CHIP, METAL 200 0.50% 1/16W
R30	1-218-655-91	s	CHIP, METAL 30 0.50% 1/16W
R31	1-218-655-91	s	CHIP, METAL 30 0.50% 1/16W
R32	1-218-692-11	s	CHIP, METAL 1K 0.50% 1/16W
R33	1-218-692-11	s	CHIP, METAL 1K 0.50% 1/16W

(DL-65 BOARD)

Ref. No. or Q'ty	Part No.	SP	Description
R34	1-218-692-11	s	CHIP, METAL 1K 0.50% 1/16W
R35	1-218-716-11	s	METAL 10K 0.50% 1/16W
R36	1-218-716-11	s	METAL 10K 0.50% 1/16W
R37	1-218-716-11	s	METAL 10K 0.50% 1/16W
R38	1-218-698-11	s	METAL 1.8K 0.50% 1/16W
R39	1-218-689-11	s	CHIP, METAL 750 0.50% 1/16W
R40	1-218-716-11	s	METAL 10K 0.50% 1/16W
R41	1-218-644-11	s	METAL 10 0.50% 1/16W
R42	1-218-728-11	s	METAL 33K 0.50% 1/16W
R43	1-218-655-91	s	CHIP, METAL 30 0.50% 1/16W
R44	1-218-667-11	s	CHIP, METAL 91 0.50% 1/16W
R50	1-216-864-11	s	METAL, CHIP 0 5% 1/16W
R51	1-216-864-11	s	METAL, CHIP 0 5% 1/16W
R55	1-216-864-11	s	METAL, CHIP 0 5% 1/16W
R57	1-216-864-11	s	METAL, CHIP 0 5% 1/16W
R58	1-216-864-11	s	METAL, CHIP 0 5% 1/16W
R60	1-218-692-11	s	CHIP, METAL 1K 0.50% 1/16W
R61	1-218-692-11	s	CHIP, METAL 1K 0.50% 1/16W
R62	1-218-692-11	s	CHIP, METAL 1K 0.50% 1/16W
R63	1-218-692-11	s	CHIP, METAL 1K 0.50% 1/16W
R64	1-218-692-11	s	CHIP, METAL 1K 0.50% 1/16W
R65	1-218-692-11	s	CHIP, METAL 1K 0.50% 1/16W
R66	1-218-692-11	s	CHIP, METAL 1K 0.50% 1/16W
R67	1-218-692-11	s	CHIP, METAL 1K 0.50% 1/16W
R68	1-218-692-11	s	CHIP, METAL 1K 0.50% 1/16W
R69	1-218-692-11	s	CHIP, METAL 1K 0.50% 1/16W
R101	1-218-652-11	s	CHIP, METAL 22 0.50% 1/16W
R102	1-218-652-11	s	CHIP, METAL 22 0.50% 1/16W
R103	1-218-728-11	s	METAL 33K 0.50% 1/16W
R104	1-218-652-11	s	CHIP, METAL 22 0.50% 1/16W
R105	1-218-740-11	s	METAL 100K 0.50% 1/16W
R112	1-218-660-91	s	CHIP, METAL 47 0.50% 1/16W
R114	1-218-708-11	s	METAL 4.7K 0.50% 1/16W
R115	1-218-708-11	s	METAL 4.7K 0.50% 1/16W
R116	1-218-722-11	s	CHIP, METAL 18K 0.50% 1/16W
R117	1-218-695-11	s	METAL 1.3K 0.50% 1/16W
R118	1-218-706-11	s	METAL 3.9K 0.50% 1/16W
R119	1-218-691-11	s	CHIP, METAL 910 0.50% 1/16W
R120	1-218-668-11	s	CHIP, METAL 100 0.50% 1/16W
R121	1-218-692-11	s	CHIP, METAL 1K 0.50% 1/16W
R122	1-218-736-11	s	METAL 68K 0.50% 1/16W
R123	1-218-680-11	s	METAL 330 0.50% 1/16W
R124	1-218-720-11	s	METAL 15K 0.50% 1/16W
R125	1-218-727-11	s	METAL 30K 0.50% 1/16W
R126	1-218-664-11	s	CHIP, METAL 68 0.50% 1/16W
R127	1-218-680-11	s	METAL 330 0.50% 1/16W
R128	1-218-680-11	s	METAL 330 0.50% 1/16W
R129	1-218-881-11	s	CHIP, METAL 27K 0.50% 1/16W
R131	1-218-692-11	s	CHIP, METAL 1K 0.50% 1/16W
R132	1-218-745-11	s	CHIP, METAL 160K 0.50% 1/16W
R133	1-218-660-91	s	CHIP, METAL 47 0.50% 1/16W
R134	1-218-660-91	s	CHIP, METAL 47 0.50% 1/16W
R135	1-218-680-11	s	METAL 330 0.50% 1/16W
R136	1-218-680-11	s	METAL 330 0.50% 1/16W
R137	1-218-644-11	s	METAL 10 0.50% 1/16W
R140	1-218-644-11	s	METAL 10 0.50% 1/16W
R142	1-218-644-11	s	METAL 10 0.50% 1/16W
R143	1-218-644-11	s	METAL 10 0.50% 1/16W
R145	1-218-644-11	s	METAL 10 0.50% 1/16W

(DL-65 BOARD)

Ref. No. or Q'ty	Part No.	SP	Description
R148	1-216-864-11	s	METAL, CHIP 0 5% 1/16W
R150	1-216-864-11	s	METAL, CHIP 0 5% 1/16W
R151	1-218-680-11	s	METAL 330 0.50% 1/16W
R152	1-218-680-11	s	METAL 330 0.50% 1/16W
R153	1-218-680-11	s	METAL 330 0.50% 1/16W
R154	1-218-680-11	s	METAL 330 0.50% 1/16W
R155	1-216-864-11	s	METAL, CHIP 0 5% 1/16W
R156	1-216-864-11	s	METAL, CHIP 0 5% 1/16W
R159	1-216-864-11	s	METAL, CHIP 0 5% 1/16W
R161	1-218-680-11	s	METAL 330 0.50% 1/16W
R162	1-216-864-11	s	METAL, CHIP 0 5% 1/16W
R163	1-218-702-11	s	CHIP, METAL 2.7K 0.50% 1/16W
R164	1-218-733-11	s	CHIP, METAL 51K 5% 1/16W
R165	1-218-704-11	s	CHIP, METAL 3.3K 0.50% 1/16W
R166	1-218-680-11	s	METAL 330 0.50% 1/16W
R167	1-218-680-11	s	METAL 330 0.50% 1/16W
R168	1-218-691-11	s	CHIP, METAL 910 0.50% 1/16W
R169	1-218-740-11	s	METAL 100K 0.50% 1/16W
R170	1-218-692-11	s	CHIP, METAL 1K 0.50% 1/16W
R171	1-218-736-11	s	METAL 68K 0.50% 1/16W
R172	1-218-652-11	s	CHIP, METAL 22 0.50% 1/16W
R173	1-218-652-11	s	CHIP, METAL 22 0.50% 1/16W
R174	1-218-732-11	s	CHIP, METAL 47K 5% 1/16W
R175	1-218-652-11	s	CHIP, METAL 22 0.50% 1/16W
R190	1-216-864-11	s	METAL, CHIP 0 5% 1/16W
R301	1-218-652-11	s	CHIP, METAL 22 0.50% 1/16W
R302	1-218-652-11	s	CHIP, METAL 22 0.50% 1/16W
R303	1-218-728-11	s	METAL 33K 0.50% 1/16W
R304	1-218-652-11	s	CHIP, METAL 22 0.50% 1/16W
R305	1-218-740-11	s	METAL 100K 0.50% 1/16W
R312	1-218-660-91	s	CHIP, METAL 47 0.50% 1/16W
R314	1-218-708-11	s	METAL 4.7K 0.50% 1/16W
R315	1-218-708-11	s	METAL 4.7K 0.50% 1/16W
R316	1-218-722-11	s	CHIP, METAL 18K 0.50% 1/16W
R317	1-218-695-11	s	METAL 1.3K 0.50% 1/16W
R318	1-218-706-11	s	METAL 3.9K 0.50% 1/16W
R319	1-218-691-11	s	CHIP, METAL 910 0.50% 1/16W
R320	1-218-668-11	s	CHIP, METAL 100 0.50% 1/16W
R321	1-218-692-11	s	CHIP, METAL 1K 0.50% 1/16W
R322	1-218-736-11	s	METAL 68K 0.50% 1/16W
R323	1-218-680-11	s	METAL 330 0.50% 1/16W
R324	1-218-720-11	s	METAL 15K 0.50% 1/16W
R325	1-218-727-11	s	METAL 30K 0.50% 1/16W
R326	1-218-664-11	s	CHIP, METAL 68 0.50% 1/16W
R327	1-218-680-11	s	METAL 330 0.50% 1/16W
R328	1-218-680-11	s	METAL 330 0.50% 1/16W
R329	1-218-652-11	s	CHIP, METAL 22 0.50% 1/16W
R330	1-218-881-11	s	CHIP, METAL 27K 0.50% 1/16W
R331	1-218-692-11	s	CHIP, METAL 1K 0.50% 1/16W
R332	1-218-745-11	s	CHIP, METAL 160K 0.50% 1/16W
R333	1-218-660-91	s	CHIP, METAL 47 0.50% 1/16W
R334	1-218-660-91	s	CHIP, METAL 47 0.50% 1/16W
R335	1-218-680-11	s	METAL 330 0.50% 1/16W
R336	1-218-680-11	s	METAL 330 0.50% 1/16W
R337	1-218-644-11	s	METAL 10 0.50% 1/16W
R340	1-218-644-11	s	METAL 10 0.50% 1/16W
R342	1-218-644-11	s	METAL 10 0.50% 1/16W
R343	1-218-644-11	s	METAL 10 0.50% 1/16W
R345	1-218-644-11	s	METAL 10 0.50% 1/16W
R348	1-216-864-11	s	METAL, CHIP 0 5% 1/16W

(DL-65 BOARD)

Ref. No. or Q'ty	Part No.	SP	Description
R350	1-216-864-11	s	METAL, CHIP 0 5% 1/16W
R351	1-218-680-11	s	METAL 330 0.50% 1/16W
R352	1-218-680-11	s	METAL 330 0.50% 1/16W
R353	1-218-680-11	s	METAL 330 0.50% 1/16W
R354	1-218-680-11	s	METAL 330 0.50% 1/16W
R355	1-216-864-11	s	METAL, CHIP 0 5% 1/16W
R356	1-216-864-11	s	METAL, CHIP 0 5% 1/16W
R359	1-216-864-11	s	METAL, CHIP 0 5% 1/16W
R361	1-218-680-11	s	METAL 330 0.50% 1/16W
R362	1-216-864-11	s	METAL, CHIP 0 5% 1/16W
R363	1-218-702-11	s	CHIP, METAL 2.7K 0.50% 1/16W
R364	1-218-733-11	s	CHIP, METAL 51K 5% 1/16W
R365	1-218-704-11	s	CHIP, METAL 3.3K 0.50% 1/16W
R366	1-218-680-11	s	METAL 330 0.50% 1/16W
R367	1-218-680-11	s	METAL 330 0.50% 1/16W
R368	1-218-691-11	s	CHIP, METAL 910 0.50% 1/16W
R369	1-218-740-11	s	METAL 100K 0.50% 1/16W
R370	1-218-692-11	s	CHIP, METAL 1K 0.50% 1/16W
R371	1-218-736-11	s	METAL 68K 0.50% 1/16W
R372	1-218-652-11	s	CHIP, METAL 22 0.50% 1/16W
R373	1-218-652-11	s	CHIP, METAL 22 0.50% 1/16W
R375	1-218-644-11	s	METAL 10 0.50% 1/16W
R377	1-218-644-11	s	METAL 10 0.50% 1/16W
R378	1-216-864-11	s	METAL, CHIP 0 5% 1/16W
R379	1-216-864-11	s	METAL, CHIP 0 5% 1/16W
R380	1-218-644-11	s	METAL 10 0.50% 1/16W
R382	1-218-680-11	s	METAL 330 0.50% 1/16W
R383	1-218-680-11	s	METAL 330 0.50% 1/16W
R384	1-218-680-11	s	METAL 330 0.50% 1/16W
R385	1-218-680-11	s	METAL 330 0.50% 1/16W
R386	1-216-864-11	s	METAL, CHIP 0 5% 1/16W
R387	1-216-864-11	s	METAL, CHIP 0 5% 1/16W
R392	1-218-680-11	s	METAL 330 0.50% 1/16W
R393	1-216-864-11	s	METAL, CHIP 0 5% 1/16W
R394	1-218-702-11	s	CHIP, METAL 2.7K 0.50% 1/16W
R395	1-216-864-11	s	METAL, CHIP 0 5% 1/16W
R396	1-218-733-11	s	CHIP, METAL 51K 5% 1/16W
R397	1-218-704-11	s	CHIP, METAL 3.3K 0.50% 1/16W
R398	1-218-680-11	s	METAL 330 0.50% 1/16W
R399	1-218-680-11	s	METAL 330 0.50% 1/16W
R400	1-218-691-11	s	CHIP, METAL 910 0.50% 1/16W
R401	1-218-740-11	s	METAL 100K 0.50% 1/16W
R402	1-218-692-11	s	CHIP, METAL 1K 0.50% 1/16W
R403	1-218-736-11	s	METAL 68K 0.50% 1/16W
R404	1-218-652-11	s	CHIP, METAL 22 0.50% 1/16W
R405	1-216-864-11	s	METAL, CHIP 0 5% 1/16W
R406	1-218-732-11	s	CHIP, METAL 47K 0.5% 1/16W
R407	1-218-732-11	s	CHIP, METAL 47K 0.5% 1/16W
R490	1-216-864-11	s	METAL, CHIP 0 5% 1/16W
R501	1-218-652-11	s	CHIP, METAL 22 0.50% 1/16W
R502	1-218-652-11	s	CHIP, METAL 22 0.50% 1/16W
R503	1-218-728-11	s	METAL 33K 0.50% 1/16W
R504	1-218-652-11	s	CHIP, METAL 22 0.50% 1/16W
R505	1-218-740-11	s	METAL 100K 0.50% 1/16W
R512	1-218-660-91	s	CHIP, METAL 47 0.50% 1/16W
R514	1-218-708-11	s	METAL 4.7K 0.50% 1/16W
R515	1-218-708-11	s	METAL 4.7K 0.50% 1/16W
R516	1-218-722-11	s	CHIP, METAL 18K 0.50% 1/16W
R517	1-218-695-11	s	METAL 1.3K 0.50% 1/16W
R518	1-218-706-11	s	METAL 3.9K 0.50% 1/16W
R519	1-218-691-11	s	CHIP, METAL 910 0.50% 1/16W

(DL-65 BOARD)

Ref. No. or Q'ty	Part No.	SP	Description
R520	1-218-668-11	s	CHIP, METAL 100 0.50% 1/16W
R521	1-218-692-11	s	CHIP, METAL 1K 0.50% 1/16W
R522	1-218-736-11	s	METAL 68K 0.50% 1/16W
R523	1-218-680-11	s	METAL 330 0.50% 1/16W
R524	1-218-720-11	s	METAL 15K 0.50% 1/16W
R525	1-218-727-11	s	METAL 30K 0.50% 1/16W
R526	1-218-664-11	s	CHIP, METAL 68 0.50% 1/16W
R527	1-218-680-11	s	METAL 330 0.50% 1/16W
R528	1-218-680-11	s	METAL 330 0.50% 1/16W
R529	1-218-652-11	s	CHIP, METAL 22 0.50% 1/16W
R530	1-218-881-11	s	CHIP, METAL 27K 0.50% 1/16W
R531	1-218-692-11	s	CHIP, METAL 1K 0.50% 1/16W
R532	1-218-745-11	s	CHIP, METAL 160K 0.50% 1/16W
R533	1-218-660-91	s	CHIP, METAL 47 0.50% 1/16W
R534	1-218-660-91	s	CHIP, METAL 47 0.50% 1/16W
R535	1-218-680-11	s	METAL 330 0.50% 1/16W
R536	1-218-680-11	s	METAL 330 0.50% 1/16W
R537	1-218-644-11	s	METAL 10 0.50% 1/16W
R540	1-218-644-11	s	METAL 10 0.50% 1/16W
R542	1-218-644-11	s	METAL 10 0.50% 1/16W
R543	1-218-644-11	s	METAL 10 0.50% 1/16W
R545	1-218-644-11	s	METAL 10 0.50% 1/16W
R547	1-216-864-11	s	METAL, CHIP 0 5% 1/16W
R548	1-216-864-11	s	METAL, CHIP 0 5% 1/16W
R549	1-216-864-11	s	METAL, CHIP 0 5% 1/16W
R550	1-216-864-11	s	METAL, CHIP 0 5% 1/16W
R551	1-218-680-11	s	METAL 330 0.50% 1/16W
R552	1-218-680-11	s	METAL 330 0.50% 1/16W
R553	1-218-680-11	s	METAL 330 0.50% 1/16W
R554	1-218-680-11	s	METAL 330 0.50% 1/16W
R555	1-216-864-11	s	METAL, CHIP 0 5% 1/16W
R556	1-216-864-11	s	METAL, CHIP 0 5% 1/16W
R559	1-216-864-11	s	METAL, CHIP 0 5% 1/16W
R560	1-216-864-11	s	METAL, CHIP 0 5% 1/16W
R562	1-218-680-11	s	METAL 330 0.50% 1/16W
R563	1-218-702-11	s	CHIP, METAL 2.7K 0.50% 1/16W
R564	1-218-733-11	s	CHIP, METAL 51K 5% 1/16W
R565	1-218-704-11	s	CHIP, METAL 3.3K 0.50% 1/16W
R566	1-218-680-11	s	METAL 330 0.50% 1/16W
R567	1-218-680-11	s	METAL 330 0.50% 1/16W
R568	1-218-691-11	s	CHIP, METAL 910 0.50% 1/16W
R569	1-218-740-11	s	METAL 100K 0.50% 1/16W
R570	1-218-692-11	s	CHIP, METAL 1K 0.50% 1/16W
R571	1-218-736-11	s	METAL 68K 0.50% 1/16W
R572	1-218-652-11	s	CHIP, METAL 22 0.50% 1/16W
R573	1-218-652-11	s	CHIP, METAL 22 0.50% 1/16W
R574	1-218-732-11	s	CHIP, METAL 47K 5% 1/16W
R590	1-216-864-11	s	METAL, CHIP 0 5% 1/16W
R700	1-218-652-11	s	CHIP, METAL 22 0.50% 1/16W
R701	1-218-728-11	s	METAL 33K 0.50% 1/16W
R702	1-218-675-11	s	CHIP, METAL 200 0.50% 1/16W
R703	1-218-692-11	s	CHIP, METAL 1K 0.50% 1/16W
R704	1-218-728-11	s	METAL 33K 0.50% 1/16W
R705	1-218-701-11	s	METAL 2.4K 0.50% 1/16W
R706	1-218-714-11	s	METAL 8.2K 0.50% 1/16W
R707	1-218-674-11	s	METAL 180 0.50% 1/16W
R708	1-218-680-11	s	METAL 330 0.50% 1/16W
R709	1-218-699-11	s	CHIP, METAL 2K 0.50% 1/16W
R710	1-218-653-11	s	METAL 24 0.50% 1/16W
R711	1-218-667-11	s	CHIP, METAL 91 0.50% 1/16W
R712	1-218-692-11	s	CHIP, METAL 1K 0.50% 1/16W

(DL-65 BOARD)

Ref. No. or Q'ty	Part No.	SP	Description
R713	1-218-749-11	s	CHIP, METAL 240K 0.50% 1/16W
R714	1-218-692-11	s	CHIP, METAL 1K 0.50% 1/16W
R715	1-218-700-11	s	METAL 2.2K 0.50% 1/16W
R716	1-218-722-11	s	CHIP, METAL 18K 0.50% 1/16W
R717	1-216-864-11	s	METAL, CHIP 0 5% 1/16W
R718	1-218-668-11	s	CHIP, METAL 100 0.50% 1/16W
R719	1-218-699-11	s	CHIP, METAL 2K 0.50% 1/16W
R720	1-218-660-91	s	CHIP, METAL 47 0.50% 1/16W
R721	1-218-666-11	s	METAL 82 0.50% 1/16W
R722	1-218-692-11	s	CHIP, METAL 1K 0.50% 1/16W
R723	1-218-749-11	s	CHIP, METAL 240K 0.50% 1/16W
R724	1-218-692-11	s	CHIP, METAL 1K 0.50% 1/16W
R725	1-218-668-11	s	CHIP, METAL 100 0.50% 1/16W
R726	1-218-668-11	s	CHIP, METAL 100 0.50% 1/16W
R727	1-218-694-11	s	CHIP, METAL 1.2K 0.50% 1/16W
R729	1-218-713-11	s	CHIP, METAL 7.5K 0.50% 1/16W
R732	1-218-692-11	s	CHIP, METAL 1K 0.50% 1/16W
R733	1-218-727-11	s	METAL 30K 0.50% 1/16W
R734	1-218-723-11	s	METAL 20K 0.50% 1/16W
R735	1-218-668-11	s	CHIP, METAL 100 0.50% 1/16W
R736	1-218-668-11	s	CHIP, METAL 100 0.50% 1/16W
R737	1-218-694-11	s	CHIP, METAL 1.2K 0.50% 1/16W
R739	1-218-713-11	s	CHIP, METAL 7.5K 0.50% 1/16W
R740	1-218-699-11	s	CHIP, METAL 2K 0.50% 1/16W
R743	1-218-692-11	s	CHIP, METAL 1K 0.50% 1/16W
R744	1-218-727-11	s	METAL 30K 0.50% 1/16W
R745	1-218-723-11	s	METAL 20K 0.50% 1/16W
R746	1-218-716-11	s	METAL 10K 0.50% 1/16W
R747	1-218-727-11	s	METAL 30K 0.50% 1/16W
R748	1-218-723-11	s	METAL 20K 0.50% 1/16W
R749	1-218-745-11	s	CHIP, METAL 160K 0.50% 1/16W
R750	1-218-712-11	s	CHIP, METAL 6.8K 0.50% 1/16W
R751	1-218-692-11	s	CHIP, METAL 1K 0.50% 1/16W
R752	1-218-660-91	s	CHIP, METAL 47 0.50% 1/16W
R753	1-218-668-11	s	CHIP, METAL 100 0.50% 1/16W
R754	1-218-668-11	s	CHIP, METAL 100 0.50% 1/16W
R755	1-218-694-11	s	CHIP, METAL 1.2K 0.50% 1/16W
R757	1-218-713-11	s	CHIP, METAL 7.5K 0.50% 1/16W
R760	1-218-692-11	s	CHIP, METAL 1K 0.50% 1/16W
R761	1-218-723-11	s	METAL 20K 0.50% 1/16W
R762	1-218-727-11	s	METAL 30K 0.50% 1/16W
R763	1-218-668-11	s	CHIP, METAL 100 0.50% 1/16W
R764	1-218-668-11	s	CHIP, METAL 100 0.50% 1/16W
R765	1-218-694-11	s	CHIP, METAL 1.2K 0.50% 1/16W
R767	1-218-699-11	s	CHIP, METAL 2K 0.50% 1/16W
R768	1-218-713-11	s	CHIP, METAL 7.5K 0.50% 1/16W
R771	1-218-692-11	s	CHIP, METAL 1K 0.50% 1/16W
R772	1-218-727-11	s	METAL 30K 0.50% 1/16W
R773	1-218-723-11	s	METAL 20K 0.50% 1/16W
R774	1-218-716-11	s	METAL 10K 0.50% 1/16W
R775	1-218-727-11	s	METAL 30K 0.50% 1/16W
R776	1-218-723-11	s	METAL 20K 0.50% 1/16W
R777	1-218-745-11	s	CHIP, METAL 160K 0.50% 1/16W
R778	1-218-712-11	s	CHIP, METAL 6.8K 0.50% 1/16W
R779	1-218-660-91	s	CHIP, METAL 47 0.50% 1/16W
R780	1-218-692-11	s	CHIP, METAL 1K 0.50% 1/16W
R781	1-218-652-11	s	CHIP, METAL 22 0.50% 1/16W
R782	1-218-652-11	s	CHIP, METAL 22 0.50% 1/16W
R783	1-218-692-11	s	CHIP, METAL 1K 0.50% 1/16W

(DL-65 BOARD)

Ref. No. or Q'ty	Part No.	SP	Description
R784	1-218-692-11	s	CHIP, METAL 1K 0.50% 1/16W
R785	1-218-716-11	s	METAL 10K 0.50% 1/16W
R786	1-218-684-11	s	CHIP, METAL 470 0.50% 1/16W
R787	1-218-652-11	s	CHIP, METAL 22 0.50% 1/16W
R788	1-218-708-11	s	METAL 4.7K 0.50% 1/16W
R789	1-218-652-11	s	CHIP, METAL 22 0.50% 1/16W
R790	1-218-652-11	s	CHIP, METAL 22 0.50% 1/16W
R791	1-218-708-11	s	METAL 4.7K 0.50% 1/16W
R792	1-218-652-11	s	CHIP, METAL 22 0.50% 1/16W
R793	1-218-692-11	s	CHIP, METAL 1K 0.50% 1/16W
R794	1-218-692-11	s	CHIP, METAL 1K 0.50% 1/16W
R795	1-218-692-11	s	CHIP, METAL 1K 0.50% 1/16W
R796	1-218-692-11	s	CHIP, METAL 1K 0.50% 1/16W
R797	1-218-740-11	s	METAL 100K 0.50% 1/16W
R798	1-218-740-11	s	METAL 100K 0.50% 1/16W
R799	1-218-740-11	s	METAL 100K 0.50% 1/16W
R800	1-218-668-11	s	CHIP, METAL 100 0.50% 1/16W
R801	1-218-668-11	s	CHIP, METAL 100 0.50% 1/16W
R802	1-218-740-11	s	METAL 100K 0.50% 1/16W
R803	1-218-740-11	s	METAL 100K 0.50% 1/16W
R804	1-218-716-11	s	METAL 10K 0.50% 1/16W
R808	1-218-740-11	s	METAL 100K 0.50% 1/16W
R809	1-218-652-11	s	CHIP, METAL 22 0.50% 1/16W
R810	1-218-708-11	s	METAL 4.7K 0.50% 1/16W
R820	1-218-716-11	s	METAL 10K 0.50% 1/16W

DU-24 BOARD

Ref. No. or Q'ty	Part No.	SP	Description
1pc	1-663-250-11	o	PRINTED CIRCUIT BOARD, DU-24
C107	1-164-156-11	s	CERAMIC 0.1uF 25V
C108	1-164-156-11	s	CERAMIC 0.1uF 25V
C109	1-162-905-11	s	CERAMIC 1PF 0.25PF 50V
C110	1-162-927-11	s	CERAMIC, CHIP 100PF 5% 50V
IC102	8-759-054-61	s	IC CLC505AJE
R108	1-218-692-11	s	CHIP, METAL 1K 0.50% 1/16W
R109	1-218-846-11	s	CHIP, METAL 910 0.50% 1/16W
R110	1-218-745-11	s	CHIP, METAL 160K 0.50% 1/16W
RV101	1-241-827-11	s	RES, ADJ, METAL 200

EX-512 BOARD

Ref. No. or Q'ty	Part No.	SP	Description
1pc	A-8273-247-A	o	MOUNTED CIRCUIT BOARD, EX-512
8pcs	3-729-061-01	s	SCREW (M2X4.5) (TYPE 1)
CN2	1-695-455-11	s	CONNECTOR, BOARD TO BOARD 50P

IE-44 BOARD

Ref. No. or Q'ty	Part No.	SP	Description
1pc	A-8273-224-A	o	MOUNTED CIRCUIT BOARD, IE-44
1pc	3-602-410-02	o	PANEL,IE-44 PC BOARD
1pc	3-724-753-01	o	RING
6pcs	3-729-061-01	s	SCREW (M2X4.5) (TYPE 1)
C1	1-162-915-11	s	CERAMIC, CHIP 10PF 5PF 50V
C2	1-162-970-11	s	CERAMIC, CHIP 0.01uF 10% 25V
C4	1-162-927-11	s	CERAMIC, CHIP 100PF 5% 50V
C5	1-162-970-11	s	CERAMIC, CHIP 0.01uF 10% 25V
C6	1-162-915-11	s	CERAMIC, CHIP 10PF 5PF 50V
C7	1-164-156-11	s	CERAMIC 0.1uF 25V
C8	1-135-177-21	s	TANTALUM, CHIP 1uF 10% 25V
C9	1-135-177-21	s	TANTALUM, CHIP 1uF 10% 25V
C10	1-162-927-11	s	CERAMIC, CHIP 100PF 5% 50V
C11	1-162-927-11	s	CERAMIC, CHIP 100PF 5% 50V
C12	1-104-823-11	s	TANTALUM, CHIP 47uF 20% 16V
C13	1-104-823-11	s	TANTALUM, CHIP 47uF 20% 16V
C14	1-164-156-11	s	CERAMIC 0.1uF 25V
C15	1-164-156-11	s	CERAMIC 0.1uF 25V
C16	1-162-915-11	s	CERAMIC, CHIP 10PF 5PF 50V
C17	1-104-851-11	s	TANTALUM, CHIP 10uF 20% 10V
C18	1-104-851-11	s	TANTALUM, CHIP 10uF 20% 10V
C20	1-162-915-11	s	CERAMIC, CHIP 10PF 5PF 50V
C21	1-162-915-11	s	CERAMIC, CHIP 10PF 5PF 50V
C22	1-162-915-11	s	CERAMIC, CHIP 10PF 5PF 50V
C23	1-162-915-11	s	CERAMIC, CHIP 10PF 5PF 50V
C24	1-162-915-11	s	CERAMIC, CHIP 10PF 5PF 50V
C25	1-162-915-11	s	CERAMIC, CHIP 10PF 5PF 50V
C101	1-162-970-11	s	CERAMIC, CHIP 0.01uF 10% 25V
C102	1-162-970-11	s	CERAMIC, CHIP 0.01uF 10% 25V
C104	1-162-927-11	s	CERAMIC, CHIP 100PF 5% 50V
C105	1-104-851-11	s	TANTALUM, CHIP 10uF 20% 10V
C106	1-104-851-11	s	TANTALUM, CHIP 10uF 20% 10V
C107	1-162-970-11	s	CERAMIC, CHIP 0.01uF 10% 25V
C108	1-162-970-11	s	CERAMIC, CHIP 0.01uF 10% 25V
C110	1-162-927-11	s	CERAMIC, CHIP 100PF 5% 50V
C111	1-104-851-11	s	TANTALUM, CHIP 10uF 20% 10V
C112	1-104-851-11	s	TANTALUM, CHIP 10uF 20% 10V
C113	1-164-156-11	s	CERAMIC 0.1uF 25V
C114	1-162-915-11	s	CERAMIC, CHIP 10PF 5PF 50V
C115	1-164-156-11	s	CERAMIC 0.1uF 25V
C116	1-164-156-11	s	CERAMIC 0.1uF 25V
C117	1-164-156-11	s	CERAMIC 0.1uF 25V
C118	1-135-177-21	s	TANTALUM, CHIP 1uF 10% 25V
C119	1-164-156-11	s	CERAMIC 0.1uF 25V
C120	1-162-970-11	s	CERAMIC, CHIP 0.01uF 10% 25V
C121	1-162-970-11	s	CERAMIC, CHIP 0.01uF 10% 25V
C123	1-162-927-11	s	CERAMIC, CHIP 100PF 5% 50V
C124	1-162-915-11	s	CERAMIC, CHIP 10PF 5PF 50V
C125	1-164-156-11	s	CERAMIC 0.1uF 25V
C201	1-162-970-11	s	CERAMIC, CHIP 0.01uF 10% 25V
C202	1-162-970-11	s	CERAMIC, CHIP 0.01uF 10% 25V
C204	1-162-927-11	s	CERAMIC, CHIP 100PF 5% 50V
C205	1-104-851-11	s	TANTALUM, CHIP 10uF 20% 10V
C206	1-104-851-11	s	TANTALUM, CHIP 10uF 20% 10V
C207	1-162-970-11	s	CERAMIC, CHIP 0.01uF 10% 25V
C208	1-162-970-11	s	CERAMIC, CHIP 0.01uF 10% 25V
C210	1-162-927-11	s	CERAMIC, CHIP 100PF 5% 50V
C211	1-104-851-11	s	TANTALUM, CHIP 10uF 20% 10V
C212	1-104-851-11	s	TANTALUM, CHIP 10uF 20% 10V

(IE-44 BOARD)

Ref. No. or Q'ty	Part No.	SP	Description
C213	1-164-156-11	s	CERAMIC 0.1uF 25V
C214	1-162-915-11	s	CERAMIC, CHIP 10PF 5PF 50V
C215	1-164-156-11	s	CERAMIC 0.1uF 25V
C216	1-164-156-11	s	CERAMIC 0.1uF 25V
C217	1-164-156-11	s	CERAMIC 0.1uF 25V
C218	1-135-177-21	s	TANTALUM, CHIP 1uF 10% 25V
C219	1-164-156-11	s	CERAMIC 0.1uF 25V
C220	1-162-970-11	s	CERAMIC, CHIP 0.01uF 10% 25V
C221	1-162-970-11	s	CERAMIC, CHIP 0.01uF 10% 25V
C223	1-162-927-11	s	CERAMIC, CHIP 100PF 5% 50V
C224	1-162-915-11	s	CERAMIC, CHIP 10PF 5PF 50V
C225	1-164-156-11	s	CERAMIC 0.1uF 25V
C301	1-162-970-11	s	CERAMIC, CHIP 0.01uF 10% 25V
C302	1-162-970-11	s	CERAMIC, CHIP 0.01uF 10% 25V
C304	1-162-927-11	s	CERAMIC, CHIP 100PF 5% 50V
C305	1-104-851-11	s	TANTALUM, CHIP 10uF 20% 10V
C306	1-104-851-11	s	TANTALUM, CHIP 10uF 20% 10V
C307	1-162-970-11	s	CERAMIC, CHIP 0.01uF 10% 25V
C308	1-162-970-11	s	CERAMIC, CHIP 0.01uF 10% 25V
C310	1-162-927-11	s	CERAMIC, CHIP 100PF 5% 50V
C311	1-104-851-11	s	TANTALUM, CHIP 10uF 20% 10V
C312	1-104-851-11	s	TANTALUM, CHIP 10uF 20% 10V
C313	1-164-156-11	s	CERAMIC 0.1uF 25V
C314	1-162-915-11	s	CERAMIC, CHIP 10PF 5PF 50V
C315	1-164-156-11	s	CERAMIC 0.1uF 25V
C316	1-164-156-11	s	CERAMIC 0.1uF 25V
C317	1-164-156-11	s	CERAMIC 0.1uF 25V
C318	1-135-177-21	s	TANTALUM, CHIP 1uF 10% 25V
C319	1-164-156-11	s	CERAMIC 0.1uF 25V
C320	1-162-970-11	s	CERAMIC, CHIP 0.01uF 10% 25V
C321	1-162-970-11	s	CERAMIC, CHIP 0.01uF 10% 25V
C323	1-162-927-11	s	CERAMIC, CHIP 100PF 5% 50V
C324	1-162-915-11	s	CERAMIC, CHIP 10PF 5PF 50V
C325	1-164-156-11	s	CERAMIC 0.1uF 25V
C401	1-164-156-11	s	CERAMIC 0.1uF 25V
C402	1-164-156-11	s	CERAMIC 0.1uF 25V
C403	1-162-970-11	s	CERAMIC, CHIP 0.01uF 10% 25V
C404	1-162-970-11	s	CERAMIC, CHIP 0.01uF 10% 25V
C405	1-162-907-11	s	CERAMIC, CHIP 2PF 50V
C406	1-162-927-11	s	CERAMIC, CHIP 100PF 5% 50V
C407	1-104-851-11	s	TANTALUM, CHIP 10uF 20% 10V
C408	1-162-922-11	s	CERAMIC, CHIP 39PF 5% 50V
C409	1-104-851-11	s	TANTALUM, CHIP 10uF 20% 10V
C410	1-162-957-11	s	CERAMIC 220PF 5% 50V
C411	1-162-970-11	s	CERAMIC, CHIP 0.01uF 10% 25V
C412	1-162-970-11	s	CERAMIC, CHIP 0.01uF 10% 25V
C413	1-162-905-11	s	CERAMIC 1PF 0.25PF 50V
C414	1-162-927-11	s	CERAMIC, CHIP 100PF 5% 50V
C421	1-162-970-11	s	CERAMIC, CHIP 0.01uF 10% 25V
C422	1-162-970-11	s	CERAMIC, CHIP 0.01uF 10% 25V
C423	1-162-905-11	s	CERAMIC 1PF 0.25PF 50V
C424	1-162-927-11	s	CERAMIC, CHIP 100PF 5% 50V
C425	1-162-970-11	s	CERAMIC, CHIP 0.01uF 10% 25V
C426	1-162-970-11	s	CERAMIC, CHIP 0.01uF 10% 25V
C428	1-162-927-11	s	CERAMIC, CHIP 100PF 5% 50V
C429	1-164-156-11	s	CERAMIC 0.1uF 25V
C430	1-164-156-11	s	CERAMIC 0.1uF 25V
C431	1-164-156-11	s	CERAMIC 0.1uF 25V
C432	1-135-177-21	s	TANTALUM, CHIP 1uF 10% 25V

(IE-44 BOARD)

Ref. No. or Q'ty	Part No.	SP	Description
C433	1-164-156-11	s	CERAMIC 0.1uF 25V
C434	1-164-156-11	s	CERAMIC 0.1uF 25V
C435	1-135-177-21	s	TANTALUM, CHIP 1uF 10% 25V
C436	1-162-970-11	s	CERAMIC, CHIP 0.01uF 10% 25V
C437	1-162-970-11	s	CERAMIC, CHIP 0.01uF 10% 25V
C438	1-162-905-11	s	CERAMIC 1PF 0.25PF 50V
C439	1-162-927-11	s	CERAMIC, CHIP 100PF 5% 50V
C440	1-162-970-11	s	CERAMIC, CHIP 0.01uF 10% 25V
C441	1-162-970-11	s	CERAMIC, CHIP 0.01uF 10% 25V
C442	1-162-907-11	s	CERAMIC, CHIP 2PF 50V
C443	1-162-927-11	s	CERAMIC, CHIP 100PF 5% 50V
C444	1-104-851-11	s	TANTALUM, CHIP 10uF 20% 10V
C445	1-104-851-11	s	TANTALUM, CHIP 10uF 20% 10V
C446	1-162-970-11	s	CERAMIC, CHIP 0.01uF 10% 25V
C447	1-162-970-11	s	CERAMIC, CHIP 0.01uF 10% 25V
C449	1-162-927-11	s	CERAMIC, CHIP 100PF 5% 50V
C450	1-135-149-21	s	TANTALUM, CHIP 2.2uF 10% 10V
C451	1-135-149-21	s	TANTALUM, CHIP 2.2uF 10% 10V
C452	1-164-156-11	s	CERAMIC 0.1uF 25V
C453	1-135-177-21	s	TANTALUM, CHIP 1uF 10% 25V
C454	1-135-149-21	s	TANTALUM, CHIP 2.2uF 10% 10V
C455	1-164-156-11	s	CERAMIC 0.1uF 25V
C457	1-135-177-21	s	TANTALUM, CHIP 1uF 10% 25V
C458	1-162-970-11	s	CERAMIC, CHIP 0.01uF 10% 25V
C459	1-162-970-11	s	CERAMIC, CHIP 0.01uF 10% 25V
C460	1-162-907-11	s	CERAMIC, CHIP 2PF 50V
C461	1-162-927-11	s	CERAMIC, CHIP 100PF 5% 50V
C462	1-135-149-21	s	TANTALUM, CHIP 2.2uF 10% 10V
C463	1-135-149-21	s	TANTALUM, CHIP 2.2uF 10% 10V
C464	1-164-156-11	s	CERAMIC 0.1uF 25V
C465	1-164-156-11	s	CERAMIC 0.1uF 25V
C466	1-164-156-11	s	CERAMIC 0.1uF 25V
C467	1-164-156-11	s	CERAMIC 0.1uF 25V
C468	1-164-156-11	s	CERAMIC 0.1uF 25V
C469	1-164-156-11	s	CERAMIC 0.1uF 25V
C470	1-164-156-11	s	CERAMIC 0.1uF 25V
C471	1-164-156-11	s	CERAMIC 0.1uF 25V
C472	1-135-149-21	s	TANTALUM, CHIP 2.2uF 10% 10V
C473	1-135-177-21	s	TANTALUM, CHIP 1uF 10% 25V
C474	1-135-149-21	s	TANTALUM, CHIP 2.2uF 10% 10V
C475	1-135-177-21	s	TANTALUM, CHIP 1uF 10% 25V
C476	1-164-156-11	s	CERAMIC 0.1uF 25V
C477	1-164-156-11	s	CERAMIC 0.1uF 25V
C478	1-164-156-11	s	CERAMIC 0.1uF 25V
C479	1-135-177-21	s	TANTALUM, CHIP 1uF 10% 25V
C480	1-162-970-11	s	CERAMIC, CHIP 0.01uF 10% 25V
C481	1-162-970-11	s	CERAMIC, CHIP 0.01uF 10% 25V
C482	1-162-905-11	s	CERAMIC 1PF 0.25PF 50V
C483	1-162-927-11	s	CERAMIC, CHIP 100PF 5% 50V
C484	1-104-851-11	s	TANTALUM, CHIP 10uF 20% 10V
C485	1-104-851-11	s	TANTALUM, CHIP 10uF 20% 10V
C486	1-135-177-21	s	TANTALUM, CHIP 1uF 10% 25V
C487	1-162-927-11	s	CERAMIC, CHIP 100PF 5% 50V
C601	1-162-970-11	s	CERAMIC, CHIP 0.01uF 10% 25V
C602	1-164-156-11	s	CERAMIC 0.1uF 25V
C615	1-164-156-11	s	CERAMIC 0.1uF 25V
C616	1-164-156-11	s	CERAMIC 0.1uF 25V
D401	8-719-820-05	s	DIODE 1SS181

(IE-44 BOARD)

Ref. No. or Q'ty	Part No.	SP	Description
D402	8-719-059-52	s	DIODE MA3J14300LSO
D403	8-719-059-51	s	DIODE MA3J142E0LSO
DL101	1-406-743-11	s	DELAY LINE 27.OnS
DL102	1-406-743-11	s	DELAY LINE 27.OnS
DL201	1-406-743-11	s	DELAY LINE 27.OnS
DL202	1-406-743-11	s	DELAY LINE 27.OnS
DL301	1-406-743-11	s	DELAY LINE 27.OnS
DL302	1-406-743-11	s	DELAY LINE 27.OnS
DL401	1-406-743-11	s	DELAY LINE 27.OnS
DL403	1-411-996-11	s	DELAY LINE
DL404	1-411-996-11	s	DELAY LINE
DL405	1-411-996-11	s	DELAY LINE
DL406	1-415-882-11	s	DELAY LINE
FL101	1-233-603-21	s	FILTER (SMD), LOW PASS
FL201	1-233-603-21	s	FILTER (SMD), LOW PASS
FL301	1-233-603-21	s	FILTER (SMD), LOW PASS
FL401	1-239-331-11	s	FILTER, LOW PASS (V DETAIL)
IC1	8-759-082-61	s	IC TC4W53FU
IC2	8-759-054-61	s	IC CLC505AJE
IC3	8-759-185-42	s	IC LM4040AIM3-2.5
IC4	8-759-173-16	s	IC TL062CPW
IC5	8-759-082-61	s	IC TC4W53FU
IC6	8-759-058-62	s	IC TC7S08FU(TE85R)
IC101	8-759-054-61	s	IC CLC505AJE
IC102	8-759-058-62	s	IC TC7S08FU(TE85R)
IC103	8-752-052-77	s	IC CXA1450M
IC104	8-759-054-61	s	IC CLC505AJE
IC105	8-759-066-59	s	IC TC74HC4053AFS
IC106	8-759-173-16	s	IC TL062CPW
IC107	8-759-054-61	s	IC CLC505AJE
IC201	8-759-054-61	s	IC CLC505AJE
IC202	8-759-058-62	s	IC TC7S08FU(TE85R)
IC203	8-752-052-77	s	IC CXA1450M
IC204	8-759-054-61	s	IC CLC505AJE
IC205	8-759-066-59	s	IC TC74HC4053AFS
IC206	8-759-173-16	s	IC TL062CPW
IC207	8-759-054-61	s	IC CLC505AJE
IC301	8-759-054-61	s	IC CLC505AJE
IC302	8-759-058-62	s	IC TC7S08FU(TE85R)
IC303	8-752-052-77	s	IC CXA1450M
IC304	8-759-054-61	s	IC CLC505AJE
IC305	8-759-066-59	s	IC TC74HC4053AFS
IC306	8-759-173-16	s	IC TL062CPW
IC307	8-759-054-61	s	IC CLC505AJE
IC401	8-759-173-16	s	IC TL062CPW
IC402	8-759-054-61	s	IC CLC505AJE
IC403	8-759-054-61	s	IC CLC505AJE
IC405	8-759-054-61	s	IC CLC505AJE
IC406	8-759-054-61	s	IC CLC505AJE
IC407	8-759-271-18	s	IC NJM1496V
IC408	8-759-054-61	s	IC CLC505AJE
IC409	8-759-054-61	s	IC CLC505AJE
IC410	8-759-054-61	s	IC CLC505AJE
IC411	8-759-271-18	s	IC NJM1496V
IC412	8-759-054-61	s	IC CLC505AJE
IC413	8-759-173-16	s	IC TL062CPW
IC414	8-759-173-16	s	IC TL062CPW

(IE-44 BOARD)

Ref. No. or Q'ty	Part No.	SP	Description
IC415	8-759-271-18	s	IC NJM1496V
IC416	8-759-173-16	s	IC TL062CPW
IC417	8-759-066-59	s	IC TC74HC4053AFS
IC418	8-759-054-61	s	IC CLC505AJE
IC601	8-759-082-60	s	IC TC7S66FU
IC602	8-759-349-47	s	IC TLC393CPW-E05
IC607	8-759-058-55	s	IC TC7S02FU-TE85L
IC608	8-759-064-36	s	IC MB88346BPFV
IC609	8-759-082-58	s	IC TC7W08FU
IC610	8-759-064-36	s	IC MB88346BPFV
IC611	8-759-147-84	s	IC CXD8072Q
IC612	8-759-086-41	s	IC X24C02S-3.0
LV401	1-411-833-21	s	COIL, VARIABLE 2.2uH
Q2	8-729-117-32	s	TRANSISTOR 2SC4177
Q3	8-729-117-16	s	TRANSISTOR 2SA1611-M6
Q4	8-729-820-86	s	TRANSISTOR 2SB1121-ST
Q5	8-729-820-90	s	TRANSISTOR 2SD1621-ST
Q101	8-729-143-07	s	TRANSISTOR 2SA1610-Y33
Q102	8-729-143-07	s	TRANSISTOR 2SA1610-Y33
Q103	8-729-928-36	s	TRANSISTOR DTA114EE
Q104	8-729-143-07	s	TRANSISTOR 2SA1610-Y33
Q105	8-729-143-14	s	TRANSISTOR 2SC4176-B35
Q106	8-729-117-16	s	TRANSISTOR 2SA1611-M6
Q107	8-729-143-14	s	TRANSISTOR 2SC4176-B35
Q108	8-729-117-16	s	TRANSISTOR 2SA1611-M6
Q109	8-729-143-14	s	TRANSISTOR 2SC4176-B35
Q110	8-729-143-07	s	TRANSISTOR 2SA1610-Y33
Q201	8-729-143-07	s	TRANSISTOR 2SA1610-Y33
Q202	8-729-143-07	s	TRANSISTOR 2SA1610-Y33
Q203	8-729-928-36	s	TRANSISTOR DTA114EE
Q204	8-729-143-07	s	TRANSISTOR 2SA1610-Y33
Q205	8-729-143-14	s	TRANSISTOR 2SC4176-B35
Q206	8-729-117-16	s	TRANSISTOR 2SA1611-M6
Q207	8-729-143-14	s	TRANSISTOR 2SC4176-B35
Q208	8-729-117-16	s	TRANSISTOR 2SA1611-M6
Q209	8-729-143-14	s	TRANSISTOR 2SC4176-B35
Q210	8-729-143-07	s	TRANSISTOR 2SA1610-Y33
Q301	8-729-143-07	s	TRANSISTOR 2SA1610-Y33
Q302	8-729-143-07	s	TRANSISTOR 2SA1610-Y33
Q303	8-729-928-36	s	TRANSISTOR DTA114EE
Q304	8-729-143-07	s	TRANSISTOR 2SA1610-Y33
Q305	8-729-143-14	s	TRANSISTOR 2SC4176-B35
Q306	8-729-117-16	s	TRANSISTOR 2SA1611-M6
Q307	8-729-143-14	s	TRANSISTOR 2SC4176-B35
Q308	8-729-117-16	s	TRANSISTOR 2SA1611-M6
Q309	8-729-143-14	s	TRANSISTOR 2SC4176-B35
Q310	8-729-143-07	s	TRANSISTOR 2SA1610-Y33
Q401	8-729-143-14	s	TRANSISTOR 2SC4176-B35
Q402	8-729-143-14	s	TRANSISTOR 2SC4176-B35
Q403	8-729-143-07	s	TRANSISTOR 2SA1610-Y33
Q404	8-729-928-90	s	TRANSISTOR DTC114EE
Q405	8-729-928-90	s	TRANSISTOR DTC114EE
Q406	8-729-143-14	s	TRANSISTOR 2SC4176-B35
Q407	8-729-143-14	s	TRANSISTOR 2SC4176-B35
Q408	8-729-143-14	s	TRANSISTOR 2SC4176-B35
Q409	8-729-143-14	s	TRANSISTOR 2SC4176-B35
Q410	8-729-143-07	s	TRANSISTOR 2SA1610-Y33
Q411	8-729-928-90	s	TRANSISTOR DTC114EE

(IE-44 BOARD)

Ref. No. or Q'ty	Part No.	SP	Description
Q412	8-729-928-90	s	TRANSISTOR DTC114EE
Q413	8-729-143-14	s	TRANSISTOR 2SC4176-B35
Q414	8-729-143-14	s	TRANSISTOR 2SC4176-B35
Q415	8-729-143-14	s	TRANSISTOR 2SC4176-B35
Q416	8-729-143-14	s	TRANSISTOR 2SC4176-B35
Q417	8-729-143-07	s	TRANSISTOR 2SA1610-Y33
Q418	8-729-143-14	s	TRANSISTOR 2SC4176-B35
Q419	8-729-143-14	s	TRANSISTOR 2SC4176-B35
Q420	8-729-143-07	s	TRANSISTOR 2SA1610-Y33
Q421	8-729-143-14	s	TRANSISTOR 2SC4176-B35
Q422	8-729-143-14	s	TRANSISTOR 2SC4176-B35
Q423	8-729-143-07	s	TRANSISTOR 2SA1610-Y33
Q424	8-729-143-14	s	TRANSISTOR 2SC4176-B35
Q425	8-729-143-14	s	TRANSISTOR 2SC4176-B35
Q426	8-729-143-14	s	TRANSISTOR 2SC4176-B35
Q427	8-729-143-07	s	TRANSISTOR 2SA1610-Y33
Q428	8-729-143-07	s	TRANSISTOR 2SA1610-Y33
Q429	8-729-928-36	s	TRANSISTOR DTA114EE
Q430	8-729-143-07	s	TRANSISTOR 2SA1610-Y33
Q431	8-729-143-07	s	TRANSISTOR 2SA1610-Y33
Q432	8-729-143-14	s	TRANSISTOR 2SC4176-B35
Q433	8-729-143-07	s	TRANSISTOR 2SA1610-Y33
Q434	8-729-143-14	s	TRANSISTOR 2SC4176-B35
Q435	8-729-143-14	s	TRANSISTOR 2SC4176-B35
Q436	8-729-928-36	s	TRANSISTOR DTA114EE
Q437	8-729-928-36	s	TRANSISTOR DTA114EE
Q438	8-729-143-14	s	TRANSISTOR 2SC4176-B35
Q601	8-729-143-07	s	TRANSISTOR 2SA1610-Y33
Q602	8-729-143-07	s	TRANSISTOR 2SA1610-Y33
Q603	8-729-143-07	s	TRANSISTOR 2SA1610-Y33
Q604	8-729-143-14	s	TRANSISTOR 2SC4176-B35
Q609	8-729-928-90	s	TRANSISTOR DTC114EE
Q610	8-729-928-90	s	TRANSISTOR DTC114EE
Q613	8-729-928-90	s	TRANSISTOR DTC114EE
R1	1-218-668-11	s	CHIP, METAL 100 0.50% 1/16W
R2	1-218-695-11	s	METAL 1.3K 0.50% 1/16W
R3	1-218-692-11	s	CHIP, METAL 1K 0.50% 1/16W
R4	1-218-692-11	s	CHIP, METAL 1K 0.50% 1/16W
R5	1-218-749-11	s	CHIP, METAL 240K 0.50% 1/16W
R6	1-218-692-11	s	CHIP, METAL 1K 0.50% 1/16W
R7	1-218-644-11	s	METAL 10 0.50% 1/16W
R8	1-218-692-11	s	CHIP, METAL 1K 0.50% 1/16W
R9	1-218-699-11	s	CHIP, METAL 2K 0.50% 1/16W
R10	1-218-701-11	s	METAL 2.4K 0.50% 1/16W
R11	1-218-724-11	s	CHIP, METAL 22K 5% 1/16W
R12	1-218-724-11	s	CHIP, METAL 22K 5% 1/16W
R13	1-218-716-11	s	METAL 10K 0.50% 1/16W
R14	1-218-716-11	s	METAL 10K 0.50% 1/16W
R15	1-218-700-11	s	METAL 2.2K 0.50% 1/16W
R16	1-218-700-11	s	METAL 2.2K 0.50% 1/16W
R17	1-218-700-11	s	METAL 2.2K 0.50% 1/16W
R18	1-218-700-11	s	METAL 2.2K 0.50% 1/16W
R19	1-218-675-11	s	CHIP, METAL 200 0.50% 1/16W
R20	1-218-675-11	s	CHIP, METAL 200 0.50% 1/16W
R21	1-218-675-11	s	CHIP, METAL 200 0.50% 1/16W
R22	1-218-675-11	s	CHIP, METAL 200 0.50% 1/16W
R24	1-218-692-11	s	CHIP, METAL 1K 0.50% 1/16W
R25	1-218-728-11	s	METAL 33K 0.50% 1/16W
R26	1-218-720-11	s	METAL 15K 0.50% 1/16W

(IE-44 BOARD)

Ref. No. or Q'ty	Part No.	SP	Description
R27	1-218-644-11	s	METAL 10 0.50% 1/16W
R28	1-218-728-11	s	METAL 33K 0.50% 1/16W
R29	1-218-644-11	s	METAL 10 0.50% 1/16W
R30	1-218-728-11	s	METAL 33K 0.50% 1/16W
R31	1-218-728-11	s	METAL 33K 0.50% 1/16W
R33	1-218-728-11	s	METAL 33K 0.50% 1/16W
R101	1-218-668-11	s	CHIP, METAL 100 0.50% 1/16W
R102	1-218-692-11	s	CHIP, METAL 1K 0.50% 1/16W
R103	1-218-679-91	s	CHIP, METAL 300 0.50% 1/16W
R104	1-218-680-11	s	METAL 330 0.50% 1/16W
R105	1-218-692-11	s	CHIP, METAL 1K 0.50% 1/16W
R106	1-218-745-11	s	CHIP, METAL 160K 0.50% 1/16W
R107	1-218-668-11	s	CHIP, METAL 100 0.50% 1/16W
R108	1-218-728-11	s	METAL 33K 0.50% 1/16W
R109	1-218-718-11	s	CHIP, METAL 12K 0.50% 1/16W
R110	1-218-824-11	s	CHIP, METAL 110 0.50% 1/16W
R111	1-218-688-11	s	METAL 680 0.50% 1/16W
R112	1-218-688-11	s	METAL 680 0.50% 1/16W
R113	1-218-677-11	s	CHIP, METAL 240 0.50% 1/16W
R114	1-218-716-11	s	METAL 10K 0.50% 1/16W
R115	1-218-692-11	s	CHIP, METAL 1K 0.50% 1/16W
R116	1-218-745-11	s	CHIP, METAL 160K 0.50% 1/16W
R117	1-218-660-91	s	CHIP, METAL 47 0.50% 1/16W
R118	1-218-692-11	s	CHIP, METAL 1K 0.50% 1/16W
R119	1-218-692-11	s	CHIP, METAL 1K 0.50% 1/16W
R120	1-218-668-11	s	CHIP, METAL 100 0.50% 1/16W
R121	1-218-700-11	s	METAL 2.2K 0.50% 1/16W
R122	1-218-668-11	s	CHIP, METAL 100 0.50% 1/16W
R123	1-218-720-11	s	METAL 15K 0.50% 1/16W
R124	1-218-711-11	s	METAL 6.2K 0.50% 1/16W
R125	1-218-716-11	s	METAL 10K 0.50% 1/16W
R126	1-218-720-11	s	METAL 15K 0.50% 1/16W
R127	1-218-724-11	s	CHIP, METAL 22K 5% 1/16W
R128	1-218-724-11	s	CHIP, METAL 22K 5% 1/16W
R129	1-218-740-11	s	METAL 100K 0.50% 1/16W
R130	1-218-652-11	s	CHIP, METAL 22 0.50% 1/16W
R131	1-218-724-11	s	CHIP, METAL 22K 5% 1/16W
R132	1-218-724-11	s	CHIP, METAL 22K 5% 1/16W
R133	1-218-684-11	s	CHIP, METAL 470 0.50% 1/16W
R134	1-218-694-11	s	CHIP, METAL 1.2K 0.50% 1/16W
R135	1-218-688-11	s	METAL 680 0.50% 1/16W
R136	1-218-694-11	s	CHIP, METAL 1.2K 0.50% 1/16W
R137	1-218-684-11	s	CHIP, METAL 470 0.50% 1/16W
R138	1-218-700-11	s	METAL 2.2K 0.50% 1/16W
R139	1-218-700-11	s	METAL 2.2K 0.50% 1/16W
R140	1-218-740-11	s	METAL 100K 0.50% 1/16W
R142	1-218-747-11	s	METAL 200K 0.50% 1/16W
R143	1-218-692-11	s	CHIP, METAL 1K 0.50% 1/16W
R144	1-218-692-11	s	CHIP, METAL 1K 0.50% 1/16W
R145	1-218-692-11	s	CHIP, METAL 1K 0.50% 1/16W
R146	1-218-692-11	s	CHIP, METAL 1K 0.50% 1/16W
R147	1-218-738-11	s	CHIP, METAL 82K 0.50% 1/16W
R148	1-218-665-11	s	CHIP, METAL 75 0.50% 1/16W
R149	1-218-692-11	s	CHIP, METAL 1K 0.50% 1/16W
R201	1-218-668-11	s	CHIP, METAL 100 0.50% 1/16W
R202	1-218-692-11	s	CHIP, METAL 1K 0.50% 1/16W
R203	1-218-679-91	s	CHIP, METAL 300 0.50% 1/16W
R204	1-218-680-11	s	METAL 330 0.50% 1/16W
R205	1-218-692-11	s	CHIP, METAL 1K 0.50% 1/16W

(IE-44 BOARD)

Ref. No. or Q'ty	Part No.	SP	Description
R206	1-218-745-11	s	CHIP, METAL 160K 0.50% 1/16W
R207	1-218-668-11	s	CHIP, METAL 100 0.50% 1/16W
R208	1-218-728-11	s	METAL 33K 0.50% 1/16W
R209	1-218-718-11	s	CHIP, METAL 12K 0.50% 1/16W
R210	1-218-824-11	s	CHIP, METAL 110 0.50% 1/16W
R211	1-218-688-11	s	METAL 680 0.50% 1/16W
R212	1-218-688-11	s	METAL 680 0.50% 1/16W
R213	1-218-677-11	s	CHIP, METAL 240 0.50% 1/16W
R214	1-218-716-11	s	METAL 10K 0.50% 1/16W
R215	1-218-692-11	s	CHIP, METAL 1K 0.50% 1/16W
R216	1-218-745-11	s	CHIP, METAL 160K 0.50% 1/16W
R217	1-218-660-91	s	CHIP, METAL 47 0.50% 1/16W
R218	1-218-692-11	s	CHIP, METAL 1K 0.50% 1/16W
R219	1-218-692-11	s	CHIP, METAL 1K 0.50% 1/16W
R220	1-218-668-11	s	CHIP, METAL 100 0.50% 1/16W
R221	1-218-700-11	s	METAL 2.2K 0.50% 1/16W
R222	1-218-668-11	s	CHIP, METAL 100 0.50% 1/16W
R223	1-218-720-11	s	METAL 15K 0.50% 1/16W
R224	1-218-716-11	s	METAL 10K 0.50% 1/16W
R225	1-218-711-11	s	METAL 6.2K 0.50% 1/16W
R226	1-218-720-11	s	METAL 15K 0.50% 1/16W
R227	1-218-724-11	s	CHIP, METAL 22K 5% 1/16W
R228	1-218-724-11	s	CHIP, METAL 22K 5% 1/16W
R229	1-218-740-11	s	METAL 100K 0.50% 1/16W
R230	1-218-652-11	s	CHIP, METAL 22 0.50% 1/16W
R231	1-218-724-11	s	CHIP, METAL 22K 5% 1/16W
R232	1-218-724-11	s	CHIP, METAL 22K 5% 1/16W
R233	1-218-684-11	s	CHIP, METAL 470 0.50% 1/16W
R234	1-218-694-11	s	CHIP, METAL 1.2K 0.50% 1/16W
R235	1-218-688-11	s	METAL 680 0.50% 1/16W
R236	1-218-694-11	s	CHIP, METAL 1.2K 0.50% 1/16W
R237	1-218-684-11	s	CHIP, METAL 470 0.50% 1/16W
R238	1-218-700-11	s	METAL 2.2K 0.50% 1/16W
R239	1-218-700-11	s	METAL 2.2K 0.50% 1/16W
R240	1-218-740-11	s	METAL 100K 0.50% 1/16W
R242	1-218-747-11	s	METAL 200K 0.50% 1/16W
R243	1-218-692-11	s	CHIP, METAL 1K 0.50% 1/16W
R244	1-218-692-11	s	CHIP, METAL 1K 0.50% 1/16W
R245	1-218-692-11	s	CHIP, METAL 1K 0.50% 1/16W
R246	1-218-692-11	s	CHIP, METAL 1K 0.50% 1/16W
R247	1-218-738-11	s	CHIP, METAL 82K 0.50% 1/16W
R248	1-218-665-11	s	CHIP, METAL 75 0.50% 1/16W
R249	1-218-692-11	s	CHIP, METAL 1K 0.50% 1/16W
R301	1-218-668-11	s	CHIP, METAL 100 0.50% 1/16W
R302	1-218-692-11	s	CHIP, METAL 1K 0.50% 1/16W
R303	1-218-679-91	s	CHIP, METAL 300 0.50% 1/16W
R304	1-218-680-11	s	METAL 330 0.50% 1/16W
R305	1-218-692-11	s	CHIP, METAL 1K 0.50% 1/16W
R306	1-218-745-11	s	CHIP, METAL 160K 0.50% 1/16W
R307	1-218-668-11	s	CHIP, METAL 100 0.50% 1/16W
R308	1-218-728-11	s	METAL 33K 0.50% 1/16W
R309	1-218-718-11	s	CHIP, METAL 12K 0.50% 1/16W
R310	1-218-824-11	s	CHIP, METAL 110 0.50% 1/16W
R311	1-218-688-11	s	METAL 680 0.50% 1/16W
R312	1-218-688-11	s	METAL 680 0.50% 1/16W
R313	1-218-677-11	s	CHIP, METAL 240 0.50% 1/16W
R314	1-218-716-11	s	METAL 10K 0.50% 1/16W
R315	1-218-692-11	s	CHIP, METAL 1K 0.50% 1/16W
R316	1-218-745-11	s	CHIP, METAL 160K 0.50% 1/16W

(IE-44 BOARD)

Ref. No. or Q'ty	Part No.	SP	Description
R317	1-218-660-91	s	CHIP, METAL 47 0.50% 1/16W
R318	1-218-692-11	s	CHIP, METAL 1K 0.50% 1/16W
R319	1-218-692-11	s	CHIP, METAL 1K 0.50% 1/16W
R320	1-218-668-11	s	CHIP, METAL 100 0.50% 1/16W
R321	1-218-700-11	s	METAL 2.2K 0.50% 1/16W
R322	1-218-668-11	s	CHIP, METAL 100 0.50% 1/16W
R323	1-218-720-11	s	METAL 15K 0.50% 1/16W
R324	1-218-716-11	s	METAL 10K 0.50% 1/16W
R325	1-218-711-11	s	METAL 6.2K 0.50% 1/16W
R326	1-218-720-11	s	METAL 15K 0.50% 1/16W
R327	1-218-724-11	s	CHIP, METAL 22K 5% 1/16W
R328	1-218-724-11	s	CHIP, METAL 22K 5% 1/16W
R329	1-218-740-11	s	METAL 100K 0.50% 1/16W
R330	1-218-652-11	s	CHIP, METAL 22 0.50% 1/16W
R331	1-218-724-11	s	CHIP, METAL 22K 5% 1/16W
R332	1-218-724-11	s	CHIP, METAL 22K 5% 1/16W
R333	1-218-684-11	s	CHIP, METAL 470 0.50% 1/16W
R334	1-218-694-11	s	CHIP, METAL 1.2K 0.50% 1/16W
R335	1-218-688-11	s	METAL 680 0.50% 1/16W
R336	1-218-694-11	s	CHIP, METAL 1.2K 0.50% 1/16W
R337	1-218-684-11	s	CHIP, METAL 470 0.50% 1/16W
R338	1-218-700-11	s	METAL 2.2K 0.50% 1/16W
R339	1-218-700-11	s	METAL 2.2K 0.50% 1/16W
R340	1-218-740-11	s	METAL 100K 0.50% 1/16W
R342	1-218-747-11	s	METAL 200K 0.50% 1/16W
R343	1-218-692-11	s	CHIP, METAL 1K 0.50% 1/16W
R344	1-218-692-11	s	CHIP, METAL 1K 0.50% 1/16W
R345	1-218-692-11	s	CHIP, METAL 1K 0.50% 1/16W
R346	1-218-692-11	s	CHIP, METAL 1K 0.50% 1/16W
R347	1-218-738-11	s	CHIP, METAL 82K 0.50% 1/16W
R348	1-218-665-11	s	CHIP, METAL 75 0.50% 1/16W
R349	1-218-692-11	s	CHIP, METAL 1K 0.50% 1/16W
R401	1-218-692-11	s	CHIP, METAL 1K 0.50% 1/16W
R402	1-218-692-11	s	CHIP, METAL 1K 0.50% 1/16W
R404	1-218-708-11	s	METAL 4.7K 0.50% 1/16W
R405	1-218-668-11	s	CHIP, METAL 100 0.50% 1/16W
R406	1-218-708-11	s	METAL 4.7K 0.50% 1/16W
R407	1-218-738-11	s	CHIP, METAL 82K 0.50% 1/16W
R409	1-218-740-11	s	METAL 100K 0.50% 1/16W
R410	1-218-708-11	s	METAL 4.7K 0.50% 1/16W
R411	1-218-692-11	s	CHIP, METAL 1K 0.50% 1/16W
R412	1-218-692-11	s	CHIP, METAL 1K 0.50% 1/16W
R413	1-218-738-11	s	CHIP, METAL 82K 0.50% 1/16W
R414	1-218-673-11	s	CHIP, METAL 160 0.50% 1/16W
R415	1-218-668-11	s	CHIP, METAL 100 0.50% 1/16W
R416	1-218-672-11	s	METAL 150 0.50% 1/16W
R417	1-218-679-91	s	CHIP, METAL 300 0.50% 1/16W
R418	1-218-824-11	s	CHIP, METAL 110 0.50% 1/16W
R419	1-218-700-11	s	METAL 2.2K 0.50% 1/16W
R420	1-218-745-11	s	CHIP, METAL 160K 0.50% 1/16W
R423	1-216-864-11	s	METAL, CHIP 0 5% 1/16W
R426	1-218-699-11	s	CHIP, METAL 2K 0.50% 1/16W
R427	1-218-668-11	s	CHIP, METAL 100 0.50% 1/16W
R428	1-218-668-11	s	CHIP, METAL 100 0.50% 1/16W
R429	1-216-864-11	s	METAL, CHIP 0 5% 1/16W
R430	1-218-824-11	s	CHIP, METAL 110 0.50% 1/16W
R431	1-218-824-11	s	CHIP, METAL 110 0.50% 1/16W
R432	1-218-692-11	s	CHIP, METAL 1K 0.50% 1/16W
R433	1-218-692-11	s	CHIP, METAL 1K 0.50% 1/16W

(IE-44 BOARD)

Ref. No. or Q'ty	Part No.	SP	Description
R434	1-218-745-11	s	CHIP, METAL 160K 0.50% 1/16W
R435	1-218-668-11	s	CHIP, METAL 100 0.50% 1/16W
R436	1-218-692-11	s	CHIP, METAL 1K 0.50% 1/16W
R437	1-218-668-11	s	CHIP, METAL 100 0.50% 1/16W
R438	1-218-745-11	s	CHIP, METAL 160K 0.50% 1/16W
R439	1-218-692-11	s	CHIP, METAL 1K 0.50% 1/16W
R440	1-218-692-11	s	CHIP, METAL 1K 0.50% 1/16W
R441	1-218-692-11	s	CHIP, METAL 1K 0.50% 1/16W
R442	1-218-723-11	s	METAL 20K 0.50% 1/16W
R443	1-218-727-11	s	METAL 30K 0.50% 1/16W
R444	1-218-700-11	s	METAL 2.2K 0.50% 1/16W
R445	1-218-706-11	s	METAL 3.9K 0.50% 1/16W
R446	1-218-706-11	s	METAL 3.9K 0.50% 1/16W
R447	1-218-747-11	s	METAL 200K 0.50% 1/16W
R448	1-218-740-11	s	METAL 100K 0.50% 1/16W
R449	1-218-716-11	s	METAL 10K 0.50% 1/16W
R450	1-218-700-11	s	METAL 2.2K 0.50% 1/16W
R451	1-218-745-11	s	CHIP, METAL 160K 0.50% 1/16W
R452	1-218-692-11	s	CHIP, METAL 1K 0.50% 1/16W
R453	1-218-692-11	s	CHIP, METAL 1K 0.50% 1/16W
R454	1-218-703-11	s	CHIP, METAL 3K 0.50% 1/16W
R455	1-218-692-11	s	CHIP, METAL 1K 0.50% 1/16W
R456	1-218-692-11	s	CHIP, METAL 1K 0.50% 1/16W
R457	1-218-692-11	s	CHIP, METAL 1K 0.50% 1/16W
R458	1-218-708-11	s	METAL 4.7K 0.50% 1/16W
R459	1-218-668-11	s	CHIP, METAL 100 0.50% 1/16W
R460	1-218-668-11	s	CHIP, METAL 100 0.50% 1/16W
R461	1-218-708-11	s	METAL 4.7K 0.50% 1/16W
R462	1-218-692-11	s	CHIP, METAL 1K 0.50% 1/16W
R463	1-218-692-11	s	CHIP, METAL 1K 0.50% 1/16W
R464	1-218-692-11	s	CHIP, METAL 1K 0.50% 1/16W
R467	1-218-692-11	s	CHIP, METAL 1K 0.50% 1/16W
R468	1-218-708-11	s	METAL 4.7K 0.50% 1/16W
R469	1-218-668-11	s	CHIP, METAL 100 0.50% 1/16W
R470	1-218-668-11	s	CHIP, METAL 100 0.50% 1/16W
R471	1-218-708-11	s	METAL 4.7K 0.50% 1/16W
R472	1-218-692-11	s	CHIP, METAL 1K 0.50% 1/16W
R474	1-218-708-11	s	METAL 4.7K 0.50% 1/16W
R475	1-218-668-11	s	CHIP, METAL 100 0.50% 1/16W
R476	1-218-668-11	s	CHIP, METAL 100 0.50% 1/16W
R477	1-218-708-11	s	METAL 4.7K 0.50% 1/16W
R478	1-218-692-11	s	CHIP, METAL 1K 0.50% 1/16W
R480	1-218-708-11	s	METAL 4.7K 0.50% 1/16W
R481	1-218-668-11	s	CHIP, METAL 100 0.50% 1/16W
R482	1-218-668-11	s	CHIP, METAL 100 0.50% 1/16W
R483	1-218-708-11	s	METAL 4.7K 0.50% 1/16W
R484	1-218-692-11	s	CHIP, METAL 1K 0.50% 1/16W
R485	1-218-692-11	s	CHIP, METAL 1K 0.50% 1/16W
R486	1-218-692-11	s	CHIP, METAL 1K 0.50% 1/16W
R487	1-218-692-11	s	CHIP, METAL 1K 0.50% 1/16W
R488	1-218-745-11	s	CHIP, METAL 160K 0.50% 1/16W
R489	1-218-692-11	s	CHIP, METAL 1K 0.50% 1/16W
R490	1-218-692-11	s	CHIP, METAL 1K 0.50% 1/16W
R491	1-218-692-11	s	CHIP, METAL 1K 0.50% 1/16W
R492	1-218-692-11	s	CHIP, METAL 1K 0.50% 1/16W
R493	1-218-745-11	s	CHIP, METAL 160K 0.50% 1/16W
R494	1-218-692-11	s	CHIP, METAL 1K 0.50% 1/16W
R495	1-218-692-11	s	CHIP, METAL 1K 0.50% 1/16W
R496	1-218-692-11	s	CHIP, METAL 1K 0.50% 1/16W

http://getMANUAL.com

(IE-44 BOARD)

Ref. No. or Q'ty	Part No.	SP	Description
R497	1-218-723-11	s	METAL 20K 0.50% 1/16W
R498	1-218-727-11	s	METAL 30K 0.50% 1/16W
R499	1-218-700-11	s	METAL 2.2K 0.50% 1/16W
R500	1-218-706-11	s	METAL 3.9K 0.50% 1/16W
R501	1-218-706-11	s	METAL 3.9K 0.50% 1/16W
R502	1-218-740-11	s	METAL 100K 0.50% 1/16W
R504	1-218-747-11	s	METAL 200K 0.50% 1/16W
R505	1-218-716-11	s	METAL 10K 0.50% 1/16W
R506	1-218-700-11	s	METAL 2.2K 0.50% 1/16W
R507	1-218-745-11	s	CHIP, METAL 160K 0.50% 1/16W
R508	1-218-708-11	s	METAL 4.7K 0.50% 1/16W
R509	1-218-668-11	s	CHIP, METAL 100 0.50% 1/16W
R510	1-218-716-11	s	METAL 10K 0.50% 1/16W
R511	1-218-700-11	s	METAL 2.2K 0.50% 1/16W
R512	1-216-864-11	s	METAL, CHIP 0 5% 1/16W
R513	1-218-700-11	s	METAL 2.2K 0.50% 1/16W
R514	1-218-716-11	s	METAL 10K 0.50% 1/16W
R515	1-218-724-11	s	CHIP, METAL 22K 5% 1/16W
R516	1-218-724-11	s	CHIP, METAL 22K 5% 1/16W
R517	1-218-724-11	s	CHIP, METAL 22K 5% 1/16W
R518	1-218-740-11	s	METAL 100K 0.50% 1/16W
R519	1-218-747-11	s	METAL 200K 0.50% 1/16W
R520	1-218-740-11	s	METAL 100K 0.50% 1/16W
R521	1-218-652-11	s	CHIP, METAL 22 0.50% 1/16W
R522	1-218-700-11	s	METAL 2.2K 0.50% 1/16W
R523	1-218-708-11	s	METAL 4.7K 0.50% 1/16W
R524	1-218-708-11	s	METAL 4.7K 0.50% 1/16W
R525	1-218-700-11	s	METAL 2.2K 0.50% 1/16W
R526	1-218-652-11	s	CHIP, METAL 22 0.50% 1/16W
R527	1-218-716-11	s	METAL 10K 0.50% 1/16W
R528	1-218-716-11	s	METAL 10K 0.50% 1/16W
R529	1-218-724-11	s	CHIP, METAL 22K 5% 1/16W
R530	1-218-724-11	s	CHIP, METAL 22K 5% 1/16W
R531	1-218-717-11	s	CHIP, METAL 11K 0.50% 1/16W
R532	1-218-724-11	s	CHIP, METAL 22K 5% 1/16W
R533	1-218-724-11	s	CHIP, METAL 22K 5% 1/16W
R534	1-218-724-11	s	CHIP, METAL 22K 5% 1/16W
R535	1-218-724-11	s	CHIP, METAL 22K 5% 1/16W
R536	1-218-724-11	s	CHIP, METAL 22K 5% 1/16W
R537	1-218-724-11	s	CHIP, METAL 22K 5% 1/16W
R538	1-218-708-11	s	METAL 4.7K 0.50% 1/16W
R539	1-218-708-11	s	METAL 4.7K 0.50% 1/16W
R540	1-218-700-11	s	METAL 2.2K 0.50% 1/16W
R541	1-218-692-11	s	CHIP, METAL 1K 0.50% 1/16W
R542	1-218-692-11	s	CHIP, METAL 1K 0.50% 1/16W
R543	1-218-692-11	s	CHIP, METAL 1K 0.50% 1/16W
R544	1-218-851-11	s	CHIP, METAL 1.5K 0.50% 1/16W
R545	1-218-713-11	s	CHIP, METAL 7.5K 0.50% 1/16W
R546	1-218-676-11	s	METAL 220 0.50% 1/16W
R548	1-218-716-11	s	METAL 10K 0.50% 1/16W
R549	1-218-716-11	s	METAL 10K 0.50% 1/16W
R550	1-218-724-11	s	CHIP, METAL 22K 5% 1/16W
R551	1-218-724-11	s	CHIP, METAL 22K 5% 1/16W
R552	1-218-716-11	s	METAL 10K 0.50% 1/16W
R553	1-218-695-11	s	METAL 1.3K 0.50% 1/16W
R554	1-218-745-11	s	CHIP, METAL 160K 0.50% 1/16W
R555	1-218-716-11	s	METAL 10K 0.50% 1/16W
R563	1-216-864-11	s	METAL, CHIP 0 5% 1/16W
R601	1-218-716-11	s	METAL 10K 0.50% 1/16W

(IE-44 BOARD)

Ref. No. or Q'ty	Part No.	SP	Description
R602	1-218-716-11	s	METAL 10K 0.50% 1/16W
R603	1-218-716-11	s	METAL 10K 0.50% 1/16W
R604	1-218-698-11	s	METAL 1.8K 0.50% 1/16W
R605	1-218-689-11	s	CHIP, METAL 750 0.50% 1/16W
R606	1-218-716-11	s	METAL 10K 0.50% 1/16W
R620	1-218-692-11	s	CHIP, METAL 1K 0.50% 1/16W
R621	1-218-692-11	s	CHIP, METAL 1K 0.50% 1/16W
R622	1-218-692-11	s	CHIP, METAL 1K 0.50% 1/16W
R623	1-218-692-11	s	CHIP, METAL 1K 0.50% 1/16W
R624	1-218-692-11	s	CHIP, METAL 1K 0.50% 1/16W
R625	1-218-740-11	s	METAL 100K 0.50% 1/16W
R626	1-218-740-11	s	METAL 100K 0.50% 1/16W
R627	1-218-740-11	s	METAL 100K 0.50% 1/16W
R628	1-218-668-11	s	CHIP, METAL 100 0.50% 1/16W
R629	1-218-668-11	s	CHIP, METAL 100 0.50% 1/16W
R630	1-218-740-11	s	METAL 100K 0.50% 1/16W
R631	1-218-740-11	s	METAL 100K 0.50% 1/16W
R639	1-218-716-11	s	METAL 10K 0.50% 1/16W
R640	1-218-690-11	s	CHIP, METAL 820 0.50% 1/16W
R641	1-218-685-11	s	METAL 510 0.50% 1/16W
R642	1-218-703-11	s	CHIP, METAL 3K 0.50% 1/16W
R643	1-218-699-11	s	CHIP, METAL 2K 0.50% 1/16W
R644	1-218-709-11	s	METAL 5.1K 0.50% 1/16W
R645	1-218-709-11	s	METAL 5.1K 0.50% 1/16W
R1003	1-218-706-11	s	METAL 3.9K 0.50% 1/16W
R1004	1-218-699-11	s	CHIP, METAL 2K 0.50% 1/16W
RV101	1-241-827-11	s	RES, ADJ, METAL 200
RV102	1-241-827-11	s	RES, ADJ, METAL 200
RV201	1-241-827-11	s	RES, ADJ, METAL 200
RV202	1-241-827-11	s	RES, ADJ, METAL 200
RV301	1-241-827-11	s	RES, ADJ, METAL 200
RV302	1-241-827-11	s	RES, ADJ, METAL 200
RV402	1-241-827-11	s	RES, ADJ, METAL 200
RV403	1-241-828-21	s	RES, ADJ, METAL 500
RV404	1-241-830-11	s	RES, ADJ, METAL 2K
RV406	1-241-833-11	s	RES, ADJ, METAL 10K

IF-568 BOARD

Ref. No. or Q'ty	Part No.	SP	Description
1pc	A-8273-188-A	o	MOUNTED CIRCUIT BOARD, IF-568
2pcs	3-729-061-01	s	SCREW (M2X4.5) (TYPE 1)
C1	1-104-919-11	s	TANTALUM, CHIP 10uF 20% 25V
C2	1-162-970-11	s	CERAMIC, CHIP 0.01uF 10% 25V
C3	1-104-919-11	s	TANTALUM, CHIP 10uF 20% 25V
C4	1-104-919-11	s	TANTALUM, CHIP 10uF 20% 25V
C5	1-162-970-11	s	CERAMIC, CHIP 0.01uF 10% 25V
C6	1-104-914-11	s	TANTAL 22uF 20% 16V
C7	1-164-156-11	s	CERAMIC 0.1uF 25V
C8	1-104-851-11	s	TANTALUM, CHIP 10uF 20% 10V
C9	1-164-156-11	s	CERAMIC 0.1uF 25V
C10	1-135-177-21	s	TANTALUM, CHIP 1uF 10% 25V
C11	1-162-970-11	s	CERAMIC, CHIP 0.01uF 10% 25V
C12	1-162-970-11	s	CERAMIC, CHIP 0.01uF 10% 25V
C13	1-162-927-11	s	CERAMIC, CHIP 100PF 5% 50V
C14	1-164-156-11	s	CERAMIC 0.1uF 25V
C15	1-104-852-11	s	TANTALUM, CHIP 22uF 20% 10V
C16	1-164-156-11	s	CERAMIC 0.1uF 25V
C17	1-162-919-11	s	CERAMIC, CHIP 22PF 5% 50V
C18	1-162-919-11	s	CERAMIC, CHIP 22PF 5% 50V
C19	1-164-156-11	s	CERAMIC 0.1uF 25V
C20	1-164-156-11	s	CERAMIC 0.1uF 25V
CN1	1-695-453-11	s	CONNECTOR, BOARD TO BOARD 50P
D1	8-719-404-35	s	DIODE MA141WK
D2	8-719-404-35	s	DIODE MA141WK
D3	8-719-029-73	s	DIODE RD10UJN-T1
D4	8-719-059-59	s	DIODE MA3J74200LSO
D5	8-719-989-76	s	DIODE SC802-04
D6	8-719-989-76	s	DIODE SC802-04
D7	8-719-059-59	s	DIODE MA3J74200LSO
D8	8-719-059-59	s	DIODE MA3J74200LSO
D9	8-719-059-59	s	DIODE MA3J74200LSO
D10	8-719-059-59	s	DIODE MA3J74200LSO
D11	8-719-059-59	s	DIODE MA3J74200LSO
D12	8-719-059-59	s	DIODE MA3J74200LSO
D13	8-719-059-59	s	DIODE MA3J74200LSO
D14	8-719-059-59	s	DIODE MA3J74200LSO
D15	8-719-059-59	s	DIODE MA3J74200LSO
D16	8-719-059-59	s	DIODE MA3J74200LSO
D17	8-719-059-59	s	DIODE MA3J74200LSO
D18	8-719-059-59	s	DIODE MA3J74200LSO
D19	8-719-059-59	s	DIODE MA3J74200LSO
D20	8-719-059-59	s	DIODE MA3J74200LSO
D21	8-719-059-59	s	DIODE MA3J74200LSO
D22	8-719-059-59	s	DIODE MA3J74200LSO
D23	8-719-059-59	s	DIODE MA3J74200LSO
D24	8-719-059-59	s	DIODE MA3J74200LSO
D25	8-719-059-59	s	DIODE MA3J74200LSO
D26	8-719-059-59	s	DIODE MA3J74200LSO
IC1	8-759-076-87	s	IC TLC27L4CPW
IC2	8-759-058-54	s	IC TC7S00FU(TE85R)
IC3	8-759-185-42	s	IC LM4040AIM3-2.5
IC4	8-759-973-71	s	IC TL7705CPS-B
IC5	8-759-059-50	s	IC MB88351PFV
IC6	8-759-061-31	s	IC HD6475208F10
IC7	8-759-049-58	s	IC SN74HC04APW-E05

(IF-568 BOARD)

Ref. No. or Q'ty	Part No.	SP	Description
L1	1-410-381-11	s	INDUCTOR CHIP 10uH
L2	1-410-381-11	s	INDUCTOR CHIP 10uH
Q1	8-729-820-90	s	TRANSISTOR 2SD1621-ST
Q2	8-729-924-39	s	TRANSISTOR DTC143XU
Q3	8-729-924-39	s	TRANSISTOR DTC143XU
Q4	8-729-143-14	s	TRANSISTOR 2SC4176-B35
Q5	8-729-820-86	s	TRANSISTOR 2SB1121-ST
R1	1-218-732-11	s	METAL 47K 0.50% 1/16W
R2	1-218-732-11	s	METAL 47K 0.50% 1/16W
R3	1-218-692-11	s	CHIP, METAL 1K 0.50% 1/16W
R4	1-218-692-11	s	CHIP, METAL 1K 0.50% 1/16W
R5	1-218-692-11	s	CHIP, METAL 1K 0.50% 1/16W
R6	1-218-676-11	s	METAL 220 0.50% 1/16W
R7	1-218-716-11	s	METAL 10K 0.50% 1/16W
R8	1-218-692-11	s	CHIP, METAL 1K 0.50% 1/16W
R9	1-218-676-11	s	METAL 220 0.50% 1/16W
R10	1-218-716-11	s	METAL 10K 0.50% 1/16W
R11	1-218-716-11	s	METAL 10K 0.50% 1/16W
R12	1-218-692-11	s	CHIP, METAL 1K 0.50% 1/16W
R13	1-218-692-11	s	CHIP, METAL 1K 0.50% 1/16W
R14	1-218-692-11	s	CHIP, METAL 1K 0.50% 1/16W
R15	1-218-692-11	s	CHIP, METAL 1K 0.50% 1/16W
R16	1-218-692-11	s	CHIP, METAL 1K 0.50% 1/16W
R17	1-218-692-11	s	CHIP, METAL 1K 0.50% 1/16W
R18	1-218-692-11	s	CHIP, METAL 1K 0.50% 1/16W
R19	1-218-692-11	s	CHIP, METAL 1K 0.50% 1/16W
R20	1-218-692-11	s	CHIP, METAL 1K 0.50% 1/16W
R21	1-218-718-11	s	CHIP, METAL 12K 0.50% 1/16W
R22	1-218-676-11	s	METAL 220 0.50% 1/16W
R23	1-218-692-11	s	CHIP, METAL 1K 0.50% 1/16W
R24	1-218-723-11	s	METAL 20K 0.50% 1/16W
R25	1-218-676-11	s	METAL 220 0.50% 1/16W
R26	1-218-692-11	s	CHIP, METAL 1K 0.50% 1/16W
R27	1-218-699-11	s	CHIP, METAL 2K 0.50% 1/16W
R28	1-218-701-11	s	METAL 2.4K 0.50% 1/16W
R29	1-218-716-11	s	METAL 10K 0.50% 1/16W
R30	1-218-709-11	s	METAL 5.1K 0.50% 1/16W
R31	1-218-709-11	s	METAL 5.1K 0.50% 1/16W
R32	1-218-716-11	s	METAL 10K 0.50% 1/16W
R33	1-218-881-11	s	CHIP, METAL 27K 0.50% 1/16W
R34	1-218-722-11	s	CHIP, METAL 18K 0.50% 1/16W
R35	1-218-716-11	s	METAL 10K 0.50% 1/16W
R36	1-218-708-11	s	METAL 4.7K 0.50% 1/16W
R37	1-218-692-11	s	CHIP, METAL 1K 0.50% 1/16W
R38	1-218-692-11	s	CHIP, METAL 1K 0.50% 1/16W
R39	1-218-692-11	s	CHIP, METAL 1K 0.50% 1/16W
R40	1-218-675-11	s	CHIP, METAL 200 0.50% 1/16W
R41	1-218-675-11	s	CHIP, METAL 200 0.50% 1/16W
R42	1-218-728-11	s	METAL 33K 0.50% 1/16W
R43	1-218-692-11	s	CHIP, METAL 1K 0.50% 1/16W
R44	1-218-740-11	s	METAL 100K 0.50% 1/16W
R45	1-218-740-11	s	METAL 100K 0.50% 1/16W
R46	1-218-740-11	s	METAL 100K 0.50% 1/16W
R47	1-218-716-11	s	METAL 10K 0.50% 1/16W
RB1	1-239-308-11	s	RESISTOR BLOCK, CHIP 47KX8
RB2	1-239-389-11	s	RESISTOR BLOCK, CHIP 47KX4
RB3	1-239-389-11	s	RESISTOR BLOCK, CHIP 47KX4

(IF-568 BOARD)

Ref. No. or Q'ty	Part No.	SP	Description
X1	1-579-594-11	s	VIBRATOR, CRYSTAL 19.6608MHz

IF-569 BOARD

Ref. No. or Q'ty	Part No.	SP	Description
1pc	A-8273-214-A	o	MOUNTED CIRCUIT BOARD, IF-569
BT1	1-550-104-32	s	HOLDER, BATTERY
C1	1-104-851-11	s	TANTALUM, CHIP 10uF 20% 10V
C2	1-104-851-11	s	TANTALUM, CHIP 10uF 20% 10V
C3	1-104-851-11	s	TANTALUM, CHIP 10uF 20% 10V
C4	1-104-851-11	s	TANTALUM, CHIP 10uF 20% 10V
C5	1-104-851-11	s	TANTALUM, CHIP 10uF 20% 10V
C6	1-162-970-11	s	CERAMIC, CHIP 0.01uF 10% 25V
C7	1-162-970-11	s	CERAMIC, CHIP 0.01uF 10% 25V
C8	1-104-913-11	s	TANTALUM, CHIP 10uF 20% 16V
C9	1-135-177-21	s	TANTALUM, CHIP 1uF 10% 25V
C10	1-104-852-11	s	TANTALUM, CHIP 22uF 20% 10V
C11	1-135-177-21	s	TANTALUM, CHIP 1uF 10% 25V
C12	1-128-393-11	s	ELECT 100uF 20% 10V
C13	1-104-852-11	s	TANTALUM, CHIP 22uF 20% 10V
C14	1-104-852-11	s	TANTALUM, CHIP 22uF 20% 10V
C15	1-162-927-11	s	CERAMIC, CHIP 100PF 5% 50V
C16	1-162-927-11	s	CERAMIC, CHIP 100PF 5% 50V
C17	1-164-156-11	s	CERAMIC 0.1uF 25V
C18	1-164-156-11	s	CERAMIC 0.1uF 25V
C19	1-162-970-11	s	CERAMIC, CHIP 0.01uF 10% 25V
C20	1-162-970-11	s	CERAMIC, CHIP 0.01uF 10% 25V
C21	1-162-970-11	s	CERAMIC, CHIP 0.01uF 10% 25V
C22	1-164-156-11	s	CERAMIC 0.1uF 25V
C23	1-162-970-11	s	CERAMIC, CHIP 0.01uF 10% 25V
C24	1-162-970-11	s	CERAMIC, CHIP 0.01uF 10% 25V
C25	1-162-970-11	s	CERAMIC, CHIP 0.01uF 10% 25V
C26	1-164-156-11	s	CERAMIC 0.1uF 25V
C27	1-164-156-11	s	CERAMIC 0.1uF 25V
C28	1-164-156-11	s	CERAMIC 0.1uF 25V
C29	1-164-156-11	s	CERAMIC 0.1uF 25V
C30	1-164-156-11	s	CERAMIC 0.1uF 25V
C32	1-104-852-11	s	TANTALUM, CHIP 22uF 20% 10V
C33	1-162-927-11	s	CERAMIC, CHIP 100PF 5% 50V
C34	1-135-177-21	s	TANTALUM, CHIP 1uF 10% 25V
C35	1-164-156-11	s	CERAMIC 0.1uF 25V
C36	1-164-156-11	s	CERAMIC 0.1uF 25V
C37	1-164-156-11	s	CERAMIC 0.1uF 25V
C38	1-104-852-11	s	TANTALUM, CHIP 22uF 20% 10V
C39	1-135-166-21	s	TANTALUM, CHIP 47uF 10% 10V
C40	1-164-156-11	s	CERAMIC 0.1uF 25V
C41	1-164-156-11	s	CERAMIC 0.1uF 25V
C42	1-164-156-11	s	CERAMIC 0.1uF 25V
C43	1-162-970-11	s	CERAMIC, CHIP 0.01uF 10% 25V
C44	1-135-070-00	s	TANTALUM, CHIP 0.1uF 10% 35V
C45	1-162-970-11	s	CERAMIC, CHIP 0.01uF 10% 25V
C46	1-135-070-00	s	TANTALUM, CHIP 0.1uF 10% 35V
C47	1-164-156-11	s	CERAMIC 0.1uF 25V
C48	1-162-921-11	s	CERAMIC, CHIP 33PF 5% 50V
C49	1-164-156-11	s	CERAMIC 0.1uF 25V
C50	1-164-156-11	s	CERAMIC 0.1uF 25V
C51	1-164-156-11	s	CERAMIC 0.1uF 25V
C52	1-162-919-11	s	CERAMIC, CHIP 22PF 5% 50V
C53	1-162-919-11	s	CERAMIC, CHIP 22PF 5% 50V
C54	1-164-156-11	s	CERAMIC 0.1uF 25V
C55	1-164-156-11	s	CERAMIC 0.1uF 25V
C56	1-104-905-11	s	DOUBLE LAYERS, 0.22F 5.5V

(IF-569 BOARD)

Ref. No. or Q'ty	Part No.	SP	Description
C57	1-135-211-11	s	TANTALUM, CHIP 6.8uF 20% 6.3V
C58	1-164-156-11	s	CERAMIC 0.1uF 25V
C59	1-164-156-11	s	CERAMIC 0.1uF 25V
C60	1-164-156-11	s	CERAMIC 0.1uF 25V
C61	1-104-851-11	s	TANTALUM, CHIP 10uF 20% 10V
C62	1-164-156-11	s	CERAMIC 0.1uF 25V
C63	1-164-156-11	s	CERAMIC 0.1uF 25V
C64	1-164-156-11	s	CERAMIC 0.1uF 25V
C65	1-164-156-11	s	CERAMIC 0.1uF 25V
C66	1-104-851-11	s	TANTALUM, CHIP 10uF 20% 10V
C67	1-164-156-11	s	CERAMIC 0.1uF 25V
C68	1-164-156-11	s	CERAMIC 0.1uF 25V
C69	1-164-156-11	s	CERAMIC 0.1uF 25V
C70	1-128-394-11	s	ELECT 220uF 20% 10V
C71	1-164-156-11	s	CERAMIC 0.1uF 25V
C72	1-164-156-11	s	CERAMIC 0.1uF 25V
C73	1-164-156-11	s	CERAMIC 0.1uF 25V
C74	1-164-156-11	s	CERAMIC 0.1uF 25V
C75	1-164-156-11	s	CERAMIC 0.1uF 25V
C76	1-164-156-11	s	CERAMIC 0.1uF 25V
C77	1-162-970-11	s	CERAMIC, CHIP 0.01uF 10% 25V
C78	1-126-394-11	s	ELECT, CHIP 10uF 20% 16V
C79	1-162-970-11	s	CERAMIC, CHIP 0.01uF 10% 25V
C80	1-164-156-11	s	CERAMIC 0.1uF 25V
C81	1-162-970-11	s	CERAMIC, CHIP 0.01uF 10% 25V
C82	1-162-927-11	s	CERAMIC, CHIP 100PF 5% 50V
C83	1-164-156-11	s	CERAMIC 0.1uF 25V
C84	1-164-156-11	s	CERAMIC 0.1uF 25V
C85	1-164-156-11	s	CERAMIC 0.1uF 25V
C86	1-104-851-11	s	TANTALUM, CHIP 10uF 20% 10V
C87	1-164-156-11	s	CERAMIC 0.1uF 25V
C88	1-164-156-11	s	CERAMIC 0.1uF 25V
C89	1-104-851-11	s	TANTALUM, CHIP 10uF 20% 10V
C90	1-104-851-11	s	TANTALUM, CHIP 10uF 20% 10V
C91	1-104-851-11	s	TANTALUM, CHIP 10uF 20% 10V
C92	1-107-686-11	s	CHIP, TANTALUM 4.7uF 20% 16V
C93	1-107-686-11	s	CHIP, TANTALUM 4.7uF 20% 16V
C94	1-164-156-11	s	CERAMIC 0.1uF 25V
C95	1-164-156-11	s	CERAMIC 0.1uF 25V
C96	1-162-927-11	s	CERAMIC, CHIP 100PF 5% 50V
C97	1-162-927-11	s	CERAMIC, CHIP 100PF 5% 50V
C98	1-164-217-11	s	CERAMIC 150PF 5% 50V
C99	1-164-217-11	s	CERAMIC 150PF 5% 50V
C100	1-164-217-11	s	CERAMIC 150PF 5% 50V
C101	1-164-217-11	s	CERAMIC 150PF 5% 50V
C102	1-164-217-11	s	CERAMIC 150PF 5% 50V
C103	1-164-217-11	s	CERAMIC 150PF 5% 50V
C104	1-164-217-11	s	CERAMIC 150PF 5% 50V
C105	1-164-217-11	s	CERAMIC 150PF 5% 50V
C106	1-164-217-11	s	CERAMIC 150PF 5% 50V
C107	1-164-156-11	s	CERAMIC 0.1uF 25V
C108	1-107-689-21	s	TANTAL 1uF 20% 35V
C109	1-164-156-11	s	CERAMIC 0.1uF 25V
C110	1-164-156-11	s	CERAMIC 0.1uF 25V
C111	1-164-156-11	s	CERAMIC 0.1uF 25V
C112	1-107-686-11	s	CHIP, TANTALUM 4.7uF 20% 16V
C113	1-107-686-11	s	CHIP, TANTALUM 4.7uF 20% 16V
C114	1-164-156-11	s	CERAMIC 0.1uF 25V
C115	1-107-686-11	s	CHIP, TANTALUM 4.7uF 20% 16V

(IF-569 BOARD)

Ref. No. or Q'ty	Part No.	SP	Description
C116	1-107-686-11	s	CHIP, TANTALUM 4.7uF 20% 16V
C117	1-164-156-11	s	CERAMIC 0.1uF 25V
C118	1-162-915-11	s	CERAMIC, CHIP 10PF 5PF 50V
C120	1-104-852-11	s	TANTALUM, CHIP 22uF 20% 10V
C121	1-162-970-11	s	CERAMIC, CHIP 0.01uF 10% 25V
C122	1-135-177-21	s	TANTALUM, CHIP 1uF 10% 25V
C123	1-128-394-11	s	ELECT 220uF 20% 10V
C124	1-135-190-21	s	TANTALUM 0.1uF 20% 20V
CN2	1-774-998-21	o	CONNECTOR, BOARD TO BOARD 20P
CN3	1-778-006-21	o	CONNECTOR, BOARD TO BOARD 20P
CNI26	1-540-197-11	o	SOCKET, IC
D1	8-719-820-41	s	DIODE 1SS302
D2	8-719-059-59	s	DIODE MA3J74200LSO
D3	8-719-059-59	s	DIODE MA3J74200LSO
D4	8-719-059-59	s	DIODE MA3J74200LSO
D5	8-719-059-59	s	DIODE MA3J74200LSO
D6	8-719-059-59	s	DIODE MA3J74200LSO
D7	8-719-059-59	s	DIODE MA3J74200LSO
D8	8-719-059-59	s	DIODE MA3J74200LSO
D9	8-719-059-59	s	DIODE MA3J74200LSO
D10	8-719-059-59	s	DIODE MA3J74200LSO
D11	8-719-820-41	s	DIODE 1SS302
D12	8-719-059-59	s	DIODE MA3J74200LSO
D13	8-719-059-59	s	DIODE MA3J74200LSO
D14	8-719-059-59	s	DIODE MA3J74200LSO
D15	8-719-059-59	s	DIODE MA3J74200LSO
D16	8-719-059-59	s	DIODE MA3J74200LSO
D17	8-719-059-59	s	DIODE MA3J74200LSO
D18	8-719-059-59	s	DIODE MA3J74200LSO
D19	8-719-059-59	s	DIODE MA3J74200LSO
D20	8-719-059-59	s	DIODE MA3J74200LSO
D21	8-719-059-59	s	DIODE MA3J74200LSO
D22	8-719-059-59	s	DIODE MA3J74200LSO
D23	8-719-059-59	s	DIODE MA3J74200LSO
D24	8-719-059-59	s	DIODE MA3J74200LSO
D25	8-719-404-35	s	DIODE MA141WK
D26	8-719-404-35	s	DIODE MA141WK
D27	8-719-059-59	s	DIODE MA3J74200LSO
D28	8-719-059-59	s	DIODE MA3J74200LSO
D29	8-719-059-59	s	DIODE MA3J74200LSO
D30	8-719-059-59	s	DIODE MA3J74200LSO
D31	8-719-059-59	s	DIODE MA3J74200LSO
D32	8-719-820-41	s	DIODE 1SS302
D33	8-719-059-59	s	DIODE MA3J74200LSO
D34	8-719-059-59	s	DIODE MA3J74200LSO
D35	8-719-820-41	s	DIODE 1SS302
D37	8-719-059-59	s	DIODE MA3J74200LSO
D38	8-719-820-41	s	DIODE 1SS302
D39	8-719-820-41	s	DIODE 1SS302
D40	8-719-820-41	s	DIODE 1SS302
D41	8-719-820-41	s	DIODE 1SS302
D42	8-719-059-59	s	DIODE MA3J74200LSO
D50	8-719-059-59	s	DIODE MA3J74200LSO
D51	8-719-059-59	s	DIODE MA3J74200LSO
IC1	8-759-076-06	s	IC TL064CPW
IC2	8-759-173-16	s	IC TL062CPW
IC3	8-759-076-06	s	IC TL064CPW

(IF-569 BOARD)

Ref. No. or Q'ty	Part No.	SP	Description
IC4	8-759-185-42	s	IC LM4040AIM3-2.5
IC5	8-759-076-06	s	IC TL064CPW
IC6	8-759-082-57	s	IC TC7W04FU
IC7	8-759-066-59	s	IC TC74HC4053AFS
IC8	8-759-092-81	s	IC SN75158PS
IC9	8-759-076-06	s	IC TL064CPW
IC10	8-759-082-61	s	IC TC4W53FU
IC11	8-759-082-61	s	IC TC4W53FU
IC12	8-759-058-55	s	IC TC7S02FU-TE85L
IC13	8-759-058-55	s	IC TC7S02FU-TE85L
IC14	8-759-058-62	s	IC TC7S08FU(TE85R)
IC15	8-759-058-62	s	IC TC7S08FU(TE85R)
IC16	8-759-066-59	s	IC TC74HC4053AFS
IC17	8-759-082-61	s	IC TC4W53FU
IC18	8-759-082-57	s	IC TC7W04FU
IC19	8-759-082-61	s	IC TC4W53FU
IC20	8-759-082-57	s	IC TC7W04FU
IC21	8-759-082-61	s	IC TC4W53FU
IC22	8-759-066-59	s	IC TC74HC4053AFS
IC23	8-759-082-61	s	IC TC4W53FU
IC24	8-759-082-61	s	IC TC4W53FU
IC25	8-759-323-73	o	IC HD6475328F10
IC26	8-759-176-87	o	IC M27V201-200L6
IC27	8-759-011-63	s	IC MC74HC4051F
IC28	8-759-011-63	s	IC MC74HC4051F
IC29	8-759-058-64	s	IC TC7S32FU(TE85R)
IC30	8-759-082-61	s	IC TC4W53FU
IC31	8-759-637-07	s	IC M62021FP
IC32	8-752-337-95	s	IC CXK58257ATM-10LL
IC33	8-759-051-48	s	IC SN74HCT541APW-E05
IC34	8-759-082-57	s	IC TC7W04FU
IC35	8-759-154-60	s	IC UPD71055GB-10-3B4
IC36	8-759-154-60	s	IC UPD71055GB-10-3B4
IC37	8-759-066-59	s	IC TC74HC4053AFS
IC38	8-759-165-37	s	IC X24164SIC7000
IC39	8-759-277-99	s	IC CXD8889R
IC40	8-759-287-54	s	IC TL084CPW-E20
IC41	8-759-059-50	s	IC MB88351PFV
IC42	8-759-058-64	s	IC TC7S32FU(TE85R)
IC43	8-759-065-20	s	IC RTC-4553B
IC44	8-759-069-36	s	IC MC74HC4046AF
IC45	8-759-054-61	s	IC CLC505AJE
IC46	8-759-271-86	s	IC TC7SH04FU
IC47	8-759-149-10	s	IC UPD4702G
IC48	8-759-196-97	s	IC TC7SH32FU-TE85R
IC49	8-759-271-84	s	IC TC7SH02FU
IC50	8-759-066-59	s	IC TC74HC4053AFS
IC51	8-759-285-09	s	IC CXD8892Q
IC52	8-759-076-06	s	IC TL064CPW
IC53	8-759-173-16	s	IC TL062CPW
IC54	8-759-054-61	s	IC CLC505AJE
IC55	8-759-637-07	s	IC M62021FP
IC56	8-759-058-64	s	IC TC7S32FU(TE85R)
IC99	8-759-050-92	s	IC SN74HC164APW-E05
L1	1-410-369-11	s	INDUCTOR CHIP 1UH
L2	1-412-029-11	s	INDUCTOR CHIP 10uH
L3	1-412-029-11	s	INDUCTOR CHIP 10uH
L5	1-412-032-11	s	INDUCTOR CHIP 100uH
L6	1-410-387-11	s	INDUCTOR CHIP 33UH

(IF-569 BOARD)

Ref. No. or Q'ty	Part No.	SP	Description
L7	1-412-029-11	s	INDUCTOR CHIP 10uH
PH1	8-749-924-62	s	PNOTO COUPLER PC410
PH2	8-749-924-62	s	PNOTO COUPLER PC410
Q1	8-729-820-86	s	TRANSISTOR 2SB1121-ST
Q2	8-729-820-86	s	TRANSISTOR 2SB1121-ST
Q3	8-729-143-14	s	TRANSISTOR 2SC4176-B35
Q4	8-729-143-14	s	TRANSISTOR 2SC4176-B35
Q5	8-729-143-07	s	TRANSISTOR 2SA1610-Y33
Q6	8-729-820-90	s	TRANSISTOR 2SD1621-ST
Q7	8-729-028-88	s	TRANSISTOR DTA143XUA-T106
Q8	8-729-028-88	s	TRANSISTOR DTA143XUA-T106
Q9	8-729-924-39	s	TRANSISTOR DTC143XU
Q10	8-729-118-58	s	TRANSISTOR 2SK852-X4
Q11	8-729-118-58	s	TRANSISTOR 2SK852-X4
Q12	8-729-924-39	s	TRANSISTOR DTC143XU
Q13	8-729-924-39	s	TRANSISTOR DTC143XU
Q14	8-729-924-39	s	TRANSISTOR DTC143XU
Q15	8-729-924-39	s	TRANSISTOR DTC143XU
Q16	8-729-924-39	s	TRANSISTOR DTC143XU
Q17	8-729-425-41	s	TRANSISTOR 2SK1374
Q18	8-729-425-41	s	TRANSISTOR 2SK1374
Q19	8-729-143-07	s	TRANSISTOR 2SA1610-Y33
Q20	8-729-143-14	s	TRANSISTOR 2SC4176-B35
Q21	8-729-928-90	s	TRANSISTOR DTC114EE
Q22	8-729-928-90	s	TRANSISTOR DTC114EE
Q23	8-729-028-88	s	TRANSISTOR DTA143XUA-T106
Q24	8-729-928-90	s	TRANSISTOR DTC114EE
Q25	8-729-820-86	s	TRANSISTOR 2SB1121-ST
Q26	8-729-143-14	s	TRANSISTOR 2SC4176-B35
Q27	8-729-928-90	s	TRANSISTOR DTC114EE
R1	1-218-881-11	s	CHIP, METAL 27K 0.50% 1/16W
R2	1-218-881-11	s	CHIP, METAL 27K 0.50% 1/16W
R3	1-218-713-11	s	CHIP, METAL 7.5K 0.50% 1/16W
R4	1-218-699-11	s	CHIP, METAL 2K 0.50% 1/16W
R5	1-218-675-11	s	CHIP, METAL 200 0.50% 1/16W
R6	1-218-675-11	s	CHIP, METAL 200 0.50% 1/16W
R7	1-218-668-11	s	CHIP, METAL 100 0.50% 1/16W
R8	1-218-668-11	s	CHIP, METAL 100 0.50% 1/16W
R9	1-218-668-11	s	CHIP, METAL 100 0.50% 1/16W
R10	1-218-679-91	s	CHIP, METAL 300 0.50% 1/16W
R11	1-218-709-11	s	METAL 5.1K 0.50% 1/16W
R12	1-218-692-11	s	CHIP, METAL 1K 0.50% 1/16W
R13	1-218-730-11	s	CHIP, METAL 39K 0.50% 1/16W
R14	1-218-716-11	s	METAL 10K 0.50% 1/16W
R15	1-218-716-11	s	METAL 10K 0.50% 1/16W
R16	1-218-716-11	s	METAL 10K 0.50% 1/16W
R17	1-218-701-11	s	METAL 2.4K 0.50% 1/16W
R18	1-218-718-11	s	CHIP, METAL 12K 0.50% 1/16W
R19	1-218-718-11	s	CHIP, METAL 12K 0.50% 1/16W
R20	1-218-718-11	s	CHIP, METAL 12K 0.50% 1/16W
R21	1-218-692-11	s	CHIP, METAL 1K 0.50% 1/16W
R22	1-218-692-11	s	CHIP, METAL 1K 0.50% 1/16W
R23	1-218-716-11	s	METAL 10K 0.50% 1/16W
R24	1-218-699-11	s	CHIP, METAL 2K 0.50% 1/16W
R25	1-218-692-11	s	CHIP, METAL 1K 0.50% 1/16W
R26	1-218-692-11	s	CHIP, METAL 1K 0.50% 1/16W
R27	1-218-692-11	s	CHIP, METAL 1K 0.50% 1/16W

(IF-569 BOARD)

Ref. No. or Q'ty	Part No.	SP	Description
R28	1-218-692-11	s	CHIP, METAL 1K 0.50% 1/16W
R29	1-218-675-11	s	CHIP, METAL 200 0.50% 1/16W
R30	1-218-692-11	s	CHIP, METAL 1K 0.50% 1/16W
R31	1-218-703-11	s	CHIP, METAL 3K 0.50% 1/16W
R32	1-218-716-11	s	METAL 10K 0.50% 1/16W
R33	1-218-675-11	s	CHIP, METAL 200 0.50% 1/16W
R34	1-218-692-11	s	CHIP, METAL 1K 0.50% 1/16W
R35	1-218-709-11	s	METAL 5.1K 0.50% 1/16W
R36	1-218-692-11	s	CHIP, METAL 1K 0.50% 1/16W
R37	1-218-740-11	s	METAL 100K 0.50% 1/16W
R38	1-218-723-11	s	METAL 20K 0.50% 1/16W
R39	1-218-723-11	s	METAL 20K 0.50% 1/16W
R40	1-218-723-11	s	METAL 20K 0.50% 1/16W
R41	1-218-716-11	s	METAL 10K 0.50% 1/16W
R42	1-218-730-11	s	CHIP, METAL 39K 0.50% 1/16W
R43	1-218-736-11	s	METAL 68K 0.50% 1/16W
R44	1-218-742-11	s	CHIP, METAL 120K 0.50% 1/16W
R45	1-218-716-11	s	METAL 10K 0.50% 1/16W
R46	1-218-716-11	s	METAL 10K 0.50% 1/16W
R47	1-218-722-11	s	CHIP, METAL 18K 0.50% 1/16W
R48	1-218-716-11	s	METAL 10K 0.50% 1/16W
R49	1-218-716-11	s	METAL 10K 0.50% 1/16W
R50	1-218-722-11	s	CHIP, METAL 18K 0.50% 1/16W
R51	1-216-857-11	s	METAL, CHIP 1M 5% 1/16W
R52	1-218-709-11	s	METAL 5.1K 0.50% 1/16W
R53	1-218-703-11	s	CHIP, METAL 3K 0.50% 1/16W
R54	1-218-675-11	s	CHIP, METAL 200 0.50% 1/16W
R55	1-218-692-11	s	CHIP, METAL 1K 0.50% 1/16W
R56	1-218-692-11	s	CHIP, METAL 1K 0.50% 1/16W
R57	1-218-709-11	s	METAL 5.1K 0.50% 1/16W
R58	1-218-675-11	s	CHIP, METAL 200 0.50% 1/16W
R59	1-218-692-11	s	CHIP, METAL 1K 0.50% 1/16W
R60	1-218-692-11	s	CHIP, METAL 1K 0.50% 1/16W
R61	1-218-692-11	s	CHIP, METAL 1K 0.50% 1/16W
R62	1-218-740-11	s	METAL 100K 0.50% 1/16W
R63	1-218-676-11	s	METAL 220 0.50% 1/16W
R64	1-218-692-11	s	CHIP, METAL 1K 0.50% 1/16W
R65	1-218-716-11	s	METAL 10K 0.50% 1/16W
R66	1-218-740-11	s	METAL 100K 0.50% 1/16W
R67	1-218-692-11	s	CHIP, METAL 1K 0.50% 1/16W
R68	1-218-676-11	s	METAL 220 0.50% 1/16W
R69	1-218-716-11	s	METAL 10K 0.50% 1/16W
R70	1-218-740-11	s	METAL 100K 0.50% 1/16W
R71	1-218-692-11	s	CHIP, METAL 1K 0.50% 1/16W
R72	1-218-740-11	s	METAL 100K 0.50% 1/16W
R73	1-218-724-11	s	CHIP, METAL 22K 5% 1/16W
R74	1-218-724-11	s	CHIP, METAL 22K 5% 1/16W
R75	1-218-644-11	s	METAL 10 0.50% 1/16W
R76	1-218-644-11	s	METAL 10 0.50% 1/16W
R77	1-218-740-11	s	METAL 100K 0.50% 1/16W
R78	1-218-692-11	s	CHIP, METAL 1K 0.50% 1/16W
R79	1-218-714-11	s	METAL 8.2K 0.50% 1/16W
R80	1-218-692-11	s	CHIP, METAL 1K 0.50% 1/16W
R81	1-218-714-11	s	METAL 8.2K 0.50% 1/16W
R82	1-218-692-11	s	CHIP, METAL 1K 0.50% 1/16W
R83	1-218-740-11	s	METAL 100K 0.50% 1/16W
R84	1-218-676-11	s	METAL 220 0.50% 1/16W
R85	1-218-716-11	s	METAL 10K 0.50% 1/16W
R86	1-218-716-11	s	METAL 10K 0.50% 1/16W

(IF-569 BOARD)

Ref. No. or Q'ty	Part No.	SP	Description
R87	1-218-712-11	s	CHIP, METAL 6.8K 0.50% 1/16W
R88	1-218-716-11	s	METAL 10K 0.50% 1/16W
R89	1-216-857-11	s	METAL, CHIP 1M 5% 1/16W
R90	1-218-716-11	s	METAL 10K 0.50% 1/16W
R91	1-216-857-11	s	METAL, CHIP 1M 5% 1/16W
R92	1-218-684-11	s	CHIP, METAL 470 0.50% 1/16W
R93	1-218-692-11	s	CHIP, METAL 1K 0.50% 1/16W
R94	1-218-692-11	s	CHIP, METAL 1K 0.50% 1/16W
R95	1-218-684-11	s	CHIP, METAL 470 0.50% 1/16W
R96	1-218-724-11	s	CHIP, METAL 22K 5% 1/16W
R97	1-218-724-11	s	CHIP, METAL 22K 5% 1/16W
R98	1-218-740-11	s	METAL 100K 0.50% 1/16W
R99	1-218-712-11	s	CHIP, METAL 6.8K 0.50% 1/16W
R100	1-218-740-11	s	METAL 100K 0.50% 1/16W
R101	1-218-712-11	s	CHIP, METAL 6.8K 0.50% 1/16W
R102	1-218-740-11	s	METAL 100K 0.50% 1/16W
R103	1-218-692-11	s	CHIP, METAL 1K 0.50% 1/16W
R104	1-218-712-11	s	CHIP, METAL 6.8K 0.50% 1/16W
R105	1-218-716-11	s	METAL 10K 0.50% 1/16W
R106	1-218-676-11	s	METAL 220 0.50% 1/16W
R107	1-218-716-11	s	METAL 10K 0.50% 1/16W
R108	1-218-716-11	s	METAL 10K 0.50% 1/16W
R109	1-218-747-11	s	METAL 200K 0.50% 1/16W
R110	1-218-692-11	s	CHIP, METAL 1K 0.50% 1/16W
R111	1-218-676-11	s	METAL 220 0.50% 1/16W
R112	1-218-716-11	s	METAL 10K 0.50% 1/16W
R113	1-218-692-11	s	CHIP, METAL 1K 0.50% 1/16W
R114	1-218-740-11	s	METAL 100K 0.50% 1/16W
R115	1-218-692-11	s	CHIP, METAL 1K 0.50% 1/16W
R116	1-218-740-11	s	METAL 100K 0.50% 1/16W
R117	1-218-692-11	s	CHIP, METAL 1K 0.50% 1/16W
R118	1-218-692-11	s	CHIP, METAL 1K 0.50% 1/16W
R119	1-218-668-11	s	CHIP, METAL 100 0.50% 1/16W
R120	1-218-676-11	s	METAL 220 0.50% 1/16W
R121	1-218-694-11	s	CHIP, METAL 1.2K 0.50% 1/16W
R122	1-218-716-11	s	METAL 10K 0.50% 1/16W
R123	1-218-668-11	s	CHIP, METAL 100 0.50% 1/16W
R124	1-218-700-11	s	METAL 2.2K 0.50% 1/16W
R125	1-218-700-11	s	METAL 2.2K 0.50% 1/16W
R126	1-218-697-11	s	METAL 1.6K 0.50% 1/16W
R127	1-218-713-11	s	CHIP, METAL 7.5K 0.50% 1/16W
R128	1-218-668-11	s	CHIP, METAL 100 0.50% 1/16W
R129	1-218-716-11	s	METAL 10K 0.50% 1/16W
R130	1-218-668-11	s	CHIP, METAL 100 0.50% 1/16W
R131	1-218-692-11	s	CHIP, METAL 1K 0.50% 1/16W
R132	1-218-692-11	s	CHIP, METAL 1K 0.50% 1/16W
R133	1-218-740-11	s	METAL 100K 0.50% 1/16W
R134	1-216-857-11	s	METAL, CHIP 1M 5% 1/16W
R135	1-218-740-11	s	METAL 100K 0.50% 1/16W
R136	1-218-692-11	s	CHIP, METAL 1K 0.50% 1/16W
R137	1-218-740-11	s	METAL 100K 0.50% 1/16W
R138	1-218-692-11	s	CHIP, METAL 1K 0.50% 1/16W
R139	1-218-692-11	s	CHIP, METAL 1K 0.50% 1/16W
R140	1-218-692-11	s	CHIP, METAL 1K 0.50% 1/16W
R141	1-218-716-11	s	METAL 10K 0.50% 1/16W
R142	1-218-644-11	s	METAL 10 0.50% 1/16W
R143	1-218-716-11	s	METAL 10K 0.50% 1/16W
R144	1-218-734-11	s	CHIP, METAL 56K 5% 1/16W
R145	1-218-716-11	s	METAL 10K 0.50% 1/16W

(IF-569 BOARD)

Ref. No. or Q'ty	Part No.	SP	Description
R146	1-218-716-11	s	METAL 10K 0.50% 1/16W
R147	1-218-724-11	s	CHIP, METAL 22K 5% 1/16W
R148	1-218-656-11	s	CHIP, METAL 33 0.50% 1/16W
R149	1-218-716-11	s	METAL 10K 0.50% 1/16W
R150	1-218-716-11	s	METAL 10K 0.50% 1/16W
R151	1-218-656-11	s	CHIP, METAL 33 0.50% 1/16W
R152	1-218-716-11	s	METAL 10K 0.50% 1/16W
R153	1-218-740-11	s	METAL 100K 0.50% 1/16W
R154	1-218-692-11	s	CHIP, METAL 1K 0.50% 1/16W
R155	1-218-699-11	s	CHIP, METAL 2K 0.50% 1/16W
R156	1-218-676-11	s	METAL 220 0.50% 1/16W
R157	1-218-668-11	s	CHIP, METAL 100 0.50% 1/16W
R158	1-218-744-11	s	METAL 150K 0.50% 1/16W
R159	1-218-676-11	s	METAL 220 0.50% 1/16W
R160	1-218-668-11	s	CHIP, METAL 100 0.50% 1/16W
R161	1-218-708-11	s	METAL 4.7K 0.50% 1/16W
R162	1-218-676-11	s	METAL 220 0.50% 1/16W
R163	1-218-668-11	s	CHIP, METAL 100 0.50% 1/16W
R164	1-218-720-11	s	METAL 15K 0.50% 1/16W
R165	1-218-720-11	s	METAL 15K 0.50% 1/16W
R166	1-218-720-11	s	METAL 15K 0.50% 1/16W
R167	1-218-724-11	s	CHIP, METAL 22K 5% 1/16W
R168	1-218-676-11	s	METAL 220 0.50% 1/16W
R169	1-218-668-11	s	CHIP, METAL 100 0.50% 1/16W
R170	1-218-724-11	s	CHIP, METAL 22K 5% 1/16W
R171	1-218-662-11	s	CHIP, METAL 56 0.50% 1/16W
R172	1-218-740-11	s	METAL 100K 0.50% 1/16W
R173	1-216-864-11	s	METAL, CHIP 0 5% 1/16W
R174	1-218-740-11	s	METAL 100K 0.50% 1/16W
R175	1-218-692-11	s	CHIP, METAL 1K 0.50% 1/16W
R176	1-218-724-11	s	CHIP, METAL 22K 5% 1/16W
R177	1-218-718-11	s	CHIP, METAL 12K 0.50% 1/16W
R178	1-218-713-11	s	CHIP, METAL 7.5K 0.50% 1/16W
R179	1-218-692-11	s	CHIP, METAL 1K 0.50% 1/16W
R180	1-218-694-11	s	CHIP, METAL 1.2K 0.50% 1/16W
R181	1-218-644-11	s	METAL 10 0.50% 1/16W
R182	1-218-713-11	s	CHIP, METAL 7.5K 0.50% 1/16W
R183	1-218-748-11	s	CHIP, METAL 220K 0.50% 1/16W
R184	1-218-851-11	s	CHIP, METAL 1.5K 0.50% 1/16W
R185	1-218-676-11	s	METAL 220 0.50% 1/16W
R186	1-218-676-11	s	METAL 220 0.50% 1/16W
R187	1-218-668-11	s	CHIP, METAL 100 0.50% 1/16W
R188	1-218-740-11	s	METAL 100K 0.50% 1/16W
R189	1-216-864-11	s	METAL, CHIP 0 5% 1/16W
R190	1-216-864-11	s	METAL, CHIP 0 5% 1/16W
R191	1-218-662-11	s	CHIP, METAL 56 0.50% 1/16W
R192	1-216-864-11	s	METAL, CHIP 0 5% 1/16W
R193	1-218-700-11	s	METAL 2.2K 0.50% 1/16W
R195	1-218-685-11	s	METAL 510 0.50% 1/16W
R196	1-218-692-11	s	CHIP, METAL 1K 0.50% 1/16W
R197	1-218-740-11	s	METAL 100K 0.50% 1/16W
R198	1-218-700-11	s	METAL 2.2K 0.50% 1/16W
R199	1-218-652-11	s	CHIP, METAL 22 0.50% 1/16W
R200	1-218-700-11	s	METAL 2.2K 0.50% 1/16W
R211	1-218-692-11	s	CHIP, METAL 1K 0.50% 1/16W
R212	1-218-692-11	s	CHIP, METAL 1K 0.50% 1/16W
R213	1-218-692-11	s	CHIP, METAL 1K 0.50% 1/16W
R214	1-218-692-11	s	CHIP, METAL 1K 0.50% 1/16W
R215	1-218-692-11	s	CHIP, METAL 1K 0.50% 1/16W

(IF-569 BOARD)

Ref. No. or Q'ty	Part No.	SP	Description
R216	1-218-692-11	s	CHIP, METAL 1K 0.50% 1/16W
R217	1-218-692-11	s	CHIP, METAL 1K 0.50% 1/16W
R218	1-218-692-11	s	CHIP, METAL 1K 0.50% 1/16W
R220	1-216-864-11	s	METAL, CHIP 0 5% 1/16W
R222	1-216-864-11	s	METAL, CHIP 0 5% 1/16W
R225	1-216-864-11	s	METAL, CHIP 0 5% 1/16W
R230	1-216-864-11	s	METAL, CHIP 0 5% 1/16W
R231	1-216-864-11	s	METAL, CHIP 0 5% 1/16W
R250	1-218-675-11	s	CHIP, METAL 200 0.50% 1/16W
R251	1-218-675-11	s	CHIP, METAL 200 0.50% 1/16W
R252	1-218-692-11	s	CHIP, METAL 1K 0.50% 1/16W
R253	1-218-692-11	s	CHIP, METAL 1K 0.50% 1/16W
R254	1-218-704-11	s	METAL 3.3K 0.50% 1/16W
R255	1-218-716-11	s	METAL 10K 0.50% 1/16W
R256	1-218-724-11	s	CHIP, METAL 22K 5% 1/16W
R257	1-218-728-11	s	METAL 33K 0.50% 1/16W
R258	1-218-668-11	s	CHIP, METAL 100 0.50% 1/16W
R260	1-218-740-11	s	METAL 100K 0.50% 1/16W
R261	1-218-732-11	s	METAL 47K 0.50% 1/16W
RB1	1-239-286-11	s	NETWORK RESISTOR (CHIP) 22K
RB2	1-239-412-11	s	RESISTOR BLOCK, CHIP 100
RB3	1-239-308-11	s	RESISTOR BLOCK, CHIP 47KX8
RB4	1-239-412-11	s	RESISTOR BLOCK, CHIP 100
RB10	1-239-416-11	s	RESISTOR BLOCK, CHIP 220X4
RB11	1-239-416-11	s	RESISTOR BLOCK, CHIP 220X4
RB12	1-239-416-11	s	RESISTOR BLOCK, CHIP 220X4
RB13	1-239-416-11	s	RESISTOR BLOCK, CHIP 220X4
S1	1-692-271-31	s	SWITCH, SLIDE
X1	1-760-435-11	s	CRYSTAL 18.00MHz

LE-172 BOARD

Ref. No. or Q'ty	Part No.	SP	Description
1pc	A-8273-190-A	o	MOUNTED CIRCUIT BOARD, LE-172
C1	1-104-919-11	s	TANTALUM, CHIP 10uF 20% 25V
C2	1-104-919-11	s	TANTALUM, CHIP 10uF 20% 25V
C3	1-135-227-11	s	TANTAL 100uF 10% 6.3V
C4	1-163-038-00	s	CHIP, CERAMIC 0.1uF 25V
C5	1-163-038-00	s	CHIP, CERAMIC 0.1uF 25V
C6	1-163-038-00	s	CHIP, CERAMIC 0.1uF 25V
CN1	1-506-482-11	o	PIN, CONNECTOR 3P
D1	8-719-032-78	s	DIODE GL3UR8
D2	8-719-032-78	s	DIODE GL3UR8
D3	8-719-032-78	s	DIODE GL3UR8
D4	8-719-032-78	s	DIODE GL3UR8
D5	8-719-032-78	s	DIODE GL3UR8
D6	8-719-032-78	s	DIODE GL3UR8
D7	8-719-032-78	s	DIODE GL3UR8
D8	8-719-032-78	s	DIODE GL3UR8
D9	8-719-032-78	s	DIODE GL3UR8
D10	8-719-032-78	s	DIODE GL3UR8
D11	8-719-032-78	s	DIODE GL3UR8
D12	8-719-032-78	s	DIODE GL3UR8
D13	8-719-032-78	s	DIODE GL3UR8
D14	8-719-032-78	s	DIODE GL3UR8
D15	8-719-032-78	s	DIODE GL3UR8
D16	8-719-032-78	s	DIODE GL3UR8
D17	8-719-032-78	s	DIODE GL3UR8
D18	8-719-032-78	s	DIODE GL3UR8
D19	8-719-032-78	s	DIODE GL3UR8
D20	8-719-032-78	s	DIODE GL3UR8
D21	8-719-032-78	s	DIODE GL3UR8
D22	8-719-032-78	s	DIODE GL3UR8
D23	8-719-032-78	s	DIODE GL3UR8
D24	8-719-032-78	s	DIODE GL3UR8
D25	8-719-032-78	s	DIODE GL3UR8
D26	8-719-032-78	s	DIODE GL3UR8
D27	8-719-032-78	s	DIODE GL3UR8
D28	8-719-032-78	s	DIODE GL3UR8
D29	8-719-032-78	s	DIODE GL3UR8
D30	8-719-032-78	s	DIODE GL3UR8
D31	8-719-032-78	s	DIODE GL3UR8
D32	8-719-032-78	s	DIODE GL3UR8
D33	8-719-032-78	s	DIODE GL3UR8
D34	8-719-032-78	s	DIODE GL3UR8
D35	8-719-032-78	s	DIODE GL3UR8
D36	8-719-032-78	s	DIODE GL3UR8
D37	8-719-032-78	s	DIODE GL3UR8
D38	8-719-032-78	s	DIODE GL3UR8
D39	8-719-032-78	s	DIODE GL3UR8
D40	8-719-032-78	s	DIODE GL3UR8
Q1	8-729-807-51	s	TRANSISTOR 2SD1623-S
Q2	8-729-807-51	s	TRANSISTOR 2SD1623-S
Q3	8-729-807-51	s	TRANSISTOR 2SD1623-S
Q4	8-729-807-51	s	TRANSISTOR 2SD1623-S
Q5	8-729-807-51	s	TRANSISTOR 2SD1623-S
Q6	8-729-807-51	s	TRANSISTOR 2SD1623-S
Q7	8-729-807-51	s	TRANSISTOR 2SD1623-S
Q8	8-729-807-51	s	TRANSISTOR 2SD1623-S
Q9	8-729-807-51	s	TRANSISTOR 2SD1623-S

(LE-172 BOARD)

Ref. No. or Q'ty	Part No.	SP	Description
Q10	8-729-807-51	s	TRANSISTOR 2SD1623-S
Q11	8-729-216-22	s	TRANSISTOR 2SA1162
Q12	8-729-027-59	s	TRANSISTOR DTC144EKA-T146
Q13	8-729-120-28	s	TRANSISTOR 2SC1623-L5L6
R1	1-216-621-11	s	CHIP, METAL 56 0.50% 1/10W
R2	1-216-621-11	s	CHIP, METAL 56 0.50% 1/10W
R3	1-216-621-11	s	CHIP, METAL 56 0.50% 1/10W
R4	1-216-621-11	s	CHIP, METAL 56 0.50% 1/10W
R5	1-216-621-11	s	CHIP, METAL 56 0.50% 1/10W
R6	1-216-621-11	s	CHIP, METAL 56 0.50% 1/10W
R7	1-216-621-11	s	CHIP, METAL 56 0.50% 1/10W
R8	1-216-621-11	s	CHIP, METAL 56 0.50% 1/10W
R9	1-216-621-11	s	CHIP, METAL 56 0.50% 1/10W
R10	1-216-621-11	s	CHIP, METAL 56 0.50% 1/10W
R11	1-216-298-00	s	CHIP, METAL 2.2 5% 1/10W
R12	1-216-298-00	s	CHIP, METAL 2.2 5% 1/10W
R13	1-216-669-11	s	METAL, CHIP 5.6K 0.5% 1/10W
R14	1-216-675-11	s	METAL, CHIP 10K 0.5% 1/10W
R15	1-216-675-11	s	METAL, CHIP 10K 0.5% 1/10W
R16	1-216-675-11	s	METAL, CHIP 10K 0.5% 1/10W
R17	1-216-665-11	s	METAL, CHIP 3.9K 0.5% 1/10W

LP-95 BOARD

Ref. No. or Q'ty	Part No.	SP	Description
1pc	1-660-258-11	o	PRINTED CIRCUIT BOARD, LP-95
CN1	1-764-088-11	o	PIN, CONNECTOR (PC BOARD) 3P
D1	8-719-989-53	s	DIODE CL-200HR-C-TSL
D2	8-719-989-53	s	DIODE CL-200HR-C-TSL
S1	1-570-612-11	s	SWITCH, TOGGLE

MB-570 BOARD

Ref. No. or Q'ty	Part No.	SP	Description
1pc	A-8273-211-A	o	MOUNTED CIRCUIT BOARD, MB-570
1pc	3-602-472-02	o	SUPPORT,PC BOARD
11pcs	3-729-061-01	s	SCREW (M2X4.5) (TYPE 1)
1pc	7-621-770-87	s	SCREW +B 2.6X5
C1	1-107-823-11	s	CHIP, CERAMIC 0.47uF 10% 16V
C2	1-104-920-11	s	CHIP, TANTALUM 4.7uF 20% 35V
C3	1-164-156-11	s	CERAMIC 0.1uF 25V
C4	1-164-156-11	s	CERAMIC 0.1uF 25V
C5	1-107-823-11	s	CHIP, CERAMIC 0.47uF 10% 16V
C6	1-107-823-11	s	CHIP, CERAMIC 0.47uF 10% 16V
C7	1-107-689-21	s	TANTAL 1uF 20% 35V
C8	1-107-823-11	s	CHIP, CERAMIC 0.47uF 10% 16V
C10	1-107-689-21	s	TANTAL 1uF 20% 35V
CN1	1-691-845-11	o	CONNECTOR, BOARD TO BOARD 50P
CN2	1-691-845-11	o	CONNECTOR, BOARD TO BOARD 50P
CN3	1-691-845-11	o	CONNECTOR, BOARD TO BOARD 50P
CN4	1-691-845-11	o	CONNECTOR, BOARD TO BOARD 50P
CN6	1-695-207-21	o	PIN, CONNECTOR (PC BOARD) 6P
CN7	1-750-934-21	o	PIN, CONNECTOR 20P
CN8	1-766-384-11	s	CONNECTOR, FPC 28P
CN9	1-568-360-21	s	CONNECTOR, BOARD TO BOARD 22P
CN10	1-764-099-11	s	PIN, CONNECTOR (PC BOARD) 14P
CN11	1-764-097-11	o	PIN, CONNECTOR (PC BOARD) 12P
CN14	1-778-005-21	o	CONNECTOR, BOARD TO BOARD 20P
CN15	1-569-532-11	s	HOUSING, 30P
CN16	1-569-532-11	s	HOUSING, 30P
CN18	1-770-580-11	o	SOCKET, CONNECTOR(PCB-PCB) 26P
D1	8-719-059-52	s	DIODE MA3J14300LSO
D2	8-719-059-52	s	DIODE MA3J14300LSO
D3	8-719-051-05	s	DIODE EC10QS06-TE12L5
D4	8-719-051-05	s	DIODE EC10QS06-TE12L5
D5	8-719-051-05	s	DIODE EC10QS06-TE12L5
D10	8-719-422-23	s	DIODE MA8047
D11	8-719-029-68	s	DIODE RD6.2UJN-T1
IC1	8-759-086-41	s	IC X24C02S-3.0
IC2	8-759-075-97	s	IC LM358PW
IC3	8-759-185-42	s	IC LM4040AIM3-2.5
Q1	8-729-820-86	s	TRANSISTOR 2SB1121-ST
Q2	8-729-117-32	s	TRANSISTOR 2SC4177
Q8	8-729-820-86	s	TRANSISTOR 2SB1121-ST
Q9	8-729-928-36	s	TRANSISTOR DTA114EE
R5	1-218-668-11	s	CHIP, METAL 100 0.50% 1/16W
R6	1-218-668-11	s	CHIP, METAL 100 0.50% 1/16W
R7	1-218-740-11	s	METAL 100K 0.50% 1/16W
R8	1-218-740-11	s	METAL 100K 0.50% 1/16W
R9	1-216-789-11	s	METAL, CHIP 2.2 5% 1/16W
R10	1-216-789-11	s	METAL, CHIP 2.2 5% 1/16W
R11	1-216-789-11	s	METAL, CHIP 2.2 5% 1/16W
R12	1-216-789-11	s	METAL, CHIP 2.2 5% 1/16W
R13	1-218-699-11	s	CHIP, METAL 2K 0.50% 1/16W
R14	1-218-692-11	s	CHIP, METAL 1K 0.50% 1/16W
R15	1-218-709-11	s	METAL 5.1K 0.50% 1/16W
R16	1-218-725-11	s	METAL 24K 0.50% 1/16W
R21	1-218-709-11	s	METAL 5.1K 0.50% 1/16W
R24	1-218-699-11	s	CHIP, METAL 2K 0.50% 1/16W
R29	1-218-712-11	s	CHIP, METAL 6.8K 0.50% 1/16W
R30	1-218-668-11	s	CHIP, METAL 100 0.50% 1/16W

(MB-570 BOARD)

Ref. No. or Q'ty	Part No.	SP	Description
R31	1-218-668-11	s	CHIP, METAL 100 0.50% 1/16W
R32	1-218-740-11	s	METAL 100K 0.50% 1/16W
R36	1-216-789-11	s	METAL, CHIP 2.2 5% 1/16W
R37	1-216-789-11	s	METAL, CHIP 2.2 5% 1/16W
R39	1-218-723-11	s	METAL 20K 0.50% 1/16W
R40	1-247-855-11	s	CARBON 10K 5% 1/4W
R41	1-216-789-11	s	METAL, CHIP 2.2 5% 1/16W
R42	1-216-789-11	s	METAL, CHIP 2.2 5% 1/16W
R43	1-216-789-11	s	METAL, CHIP 2.2 5% 1/16W
R44	1-216-789-11	s	METAL, CHIP 2.2 5% 1/16W

MB-573 BOARD

Ref. No. or Q'ty	Part No.	SP	Description
1pc	A-8273-140-A	o	MOUNTED CIRCUIT BOARD, MB-573
12pcs	3-729-061-01	s	SCREW (M2X4.5) (TYPE 1)
1pc	3-602-434-02	o	SUPPORT,PC BOARD
1pc	7-621-773-86	s	SCREW +B 2.6X4
C1	1-104-920-11	s	CHIP, TANTALUM 4.7uF 20% 35V
C2	1-104-920-11	s	CHIP, TANTALUM 4.7uF 20% 35V
C3	1-164-156-11	s	CERAMIC 0.1uF 25V
C4	1-164-156-11	s	CERAMIC 0.1uF 25V
C6	1-164-156-11	s	CERAMIC 0.1uF 25V
C7	1-164-156-11	s	CERAMIC 0.1uF 25V
C8	1-107-689-21	s	TANTAL 1uF 20% 35V
CN5	1-774-995-11	o	CONNECTOR, BOARD TO BOARD 50P
CN7	1-569-532-11	s	HOUSING, 30P
CN8	1-569-532-11	s	HOUSING, 30P
CN9	1-764-088-11	o	PIN, CONNECTOR (PC BOARD) 3P
CN10	1-750-935-21	o	PIN, CONNECTOR 30P
CN11	1-750-933-21	o	PIN, CONNECTOR 12P
CN12	1-750-933-21	o	PIN, CONNECTOR 12P
CN13	1-750-933-21	o	PIN, CONNECTOR 12P
CN14	1-764-089-11	o	PIN, CONNECTOR (PC BOARD) 4P
CN15	1-695-480-21	o	PIN, CONNECTOR (PC BOARD) 2P
CN16	1-695-480-21	o	PIN, CONNECTOR (PC BOARD) 2P
CN17	1-764-088-11	o	PIN, CONNECTOR (PC BOARD) 3P
CN19	1-695-479-11	o	PIN, CONNECTOR (PC BOARD) 2P
CN20	1-695-479-11	o	PIN, CONNECTOR (PC BOARD) 2P
CN21	1-764-090-11	o	PIN, CONNECTOR (PC BOARD) 5P
CN22	1-764-097-11	o	PIN, CONNECTOR (PC BOARD) 12P
CN23	1-695-210-21	o	PIN, CONNECTOR (PC BOARD) 15P
CN24	1-764-097-11	o	PIN, CONNECTOR (PC BOARD) 12P
CN25	1-764-091-11	o	PIN, CONNECTOR (PC BOARD) 6P
CN26	1-695-479-11	o	PIN, CONNECTOR (PC BOARD) 2P
CN27	1-764-097-11	o	PIN, CONNECTOR (PC BOARD) 12P
CN28	1-764-093-21	o	PIN, CONNECTOR (PC BOARD) 8P
CN29	1-695-479-11	o	PIN, CONNECTOR (PC BOARD) 2P
CN30	1-764-088-11	o	PIN, CONNECTOR (PC BOARD) 3P
CN31	1-764-091-11	o	PIN, CONNECTOR (PC BOARD) 6P
CN32	1-695-479-11	o	PIN, CONNECTOR (PC BOARD) 2P
D1	8-719-059-52	s	DIODE MA3J14300LSO
D2	8-719-059-52	s	DIODE MA3J14300LSO
D3	8-719-059-51	s	DIODE MA3J142E0LSO
D6	8-719-059-52	s	DIODE MA3J14300LSO
D7	8-719-059-52	s	DIODE MA3J14300LSO
D8	8-719-109-81	s	DIODE RD4.7ES-B2
D9	8-719-422-23	s	DIODE MA8047
IC1	8-759-086-41	s	IC X24C02S-3.0
IC2	8-759-075-97	s	IC LM358PW
IC3	8-759-185-42	s	IC LM4040AIM3-2.5
Q1	8-729-820-86	s	TRANSISTOR 2SB1121-ST
Q2	8-729-117-32	s	TRANSISTOR 2SC4177
Q3	8-729-928-90	s	TRANSISTOR DTC114EE
Q4	8-729-820-86	s	TRANSISTOR 2SB1121-ST
Q5	8-729-117-32	s	TRANSISTOR 2SC4177
Q6	8-729-928-90	s	TRANSISTOR DTC114EE
Q7	8-729-928-90	s	TRANSISTOR DTC114EE
Q8	8-729-140-63	s	TRANSISTOR 2SA1611-M5M6
Q9	8-729-140-63	s	TRANSISTOR 2SA1611-M5M6
Q10	8-729-928-36	s	TRANSISTOR DTA114EE

(MB-573 BOARD)

Ref. No. or Q'ty	Part No.	SP	Description
Q11	8-729-928-36	s	TRANSISTOR DTA114EE
R1	1-218-668-11	s	CHIP, METAL 100 0.50% 1/16W
R2	1-218-668-11	s	CHIP, METAL 100 0.50% 1/16W
R3	1-218-668-11	s	CHIP, METAL 100 0.50% 1/16W
R4	1-218-668-11	s	CHIP, METAL 100 0.50% 1/16W
R5	1-216-789-11	s	METAL, CHIP 2.2 5% 1/16W
R6	1-216-789-11	s	METAL, CHIP 2.2 5% 1/16W
R7	1-216-789-11	s	METAL, CHIP 2.2 5% 1/16W
R8	1-216-789-11	s	METAL, CHIP 2.2 5% 1/16W
R9	1-218-668-11	s	CHIP, METAL 100 0.50% 1/16W
R10	1-218-668-11	s	CHIP, METAL 100 0.50% 1/16W
R11	1-218-740-11	s	METAL 100K 0.50% 1/16W
R12	1-218-740-11	s	METAL 100K 0.50% 1/16W
R13	1-216-789-11	s	METAL, CHIP 2.2 5% 1/16W
R14	1-216-789-11	s	METAL, CHIP 2.2 5% 1/16W
R15	1-216-789-11	s	METAL, CHIP 2.2 5% 1/16W
R16	1-216-789-11	s	METAL, CHIP 2.2 5% 1/16W
R17	1-218-699-11	s	CHIP, METAL 2K 0.50% 1/16W
R18	1-218-692-11	s	CHIP, METAL 1K 0.50% 1/16W
R19	1-218-709-11	s	METAL 5.1K 0.50% 1/16W
R20	1-218-725-11	s	METAL 24K 0.50% 1/16W
R21	1-218-712-11	s	CHIP, METAL 6.8K 0.50% 1/16W
R22	1-218-740-11	s	METAL 100K 0.50% 1/16W
R23	1-218-727-11	s	METAL 30K 0.50% 1/16W
R24	1-218-699-11	s	CHIP, METAL 2K 0.50% 1/16W
R25	1-218-692-11	s	CHIP, METAL 1K 0.50% 1/16W
R26	1-218-709-11	s	METAL 5.1K 0.50% 1/16W
R27	1-218-725-11	s	METAL 24K 0.50% 1/16W
R28	1-218-712-11	s	CHIP, METAL 6.8K 0.50% 1/16W
R29	1-218-699-11	s	CHIP, METAL 2K 0.50% 1/16W
R30	1-218-725-11	s	METAL 24K 0.50% 1/16W
R31	1-218-740-11	s	METAL 100K 0.50% 1/16W
R32	1-218-727-11	s	METAL 30K 0.50% 1/16W
R33	1-218-727-11	s	METAL 30K 0.50% 1/16W
R36	1-216-789-11	s	METAL, CHIP 2.2 5% 1/16W
R37	1-216-789-11	s	METAL, CHIP 2.2 5% 1/16W
R39	1-218-709-11	s	METAL 5.1K 0.50% 1/16W
R42	1-216-789-11	s	METAL, CHIP 2.2 5% 1/16W
R43	1-216-789-11	s	METAL, CHIP 2.2 5% 1/16W
R45	1-218-709-11	s	METAL 5.1K 0.50% 1/16W
R46	1-218-712-11	s	CHIP, METAL 6.8K 0.50% 1/16W
R47	1-218-712-11	s	CHIP, METAL 6.8K 0.50% 1/16W
R48	1-218-652-11	s	CHIP, METAL 22 0.50% 1/16W
R49	1-218-652-11	s	CHIP, METAL 22 0.50% 1/16W
R50	1-218-728-11	s	METAL 33K 0.50% 1/16W
R51	1-216-864-11	s	METAL 0 5% 1/16W

http://getMANUAL.com

MB-666 BOARD

Ref. No. or Q'ty	Part No.	SP	Description
1pc	A-8273-180-A	o	MOUNTED CIRCUIT BOARD, MB-666
28pcs	3-729-061-01	s	SCREW (M2X4.5) (TYPE 1)
BZ1	1-529-104-11	s	BUZZER, PIEZOELECTRIC
C1	1-104-920-11	s	CHIP, TANTALUM 4.7uF 20% 35V
C2	1-104-920-11	s	CHIP, TANTALUM 4.7uF 20% 35V
C3	1-164-156-11	s	CERAMIC 0.1uF 25V
C4	1-164-156-11	s	CERAMIC 0.1uF 25V
C5	1-164-156-11	s	CERAMIC 0.1uF 25V
C6	1-164-156-11	s	CERAMIC 0.1uF 25V
C7	1-107-689-21	s	TANTAL 1uF 20% 35V
C8	1-104-852-11	s	TANTALUM, CHIP 22uF 20% 10V
C9	1-104-852-11	s	TANTALUM, CHIP 22uF 20% 10V
C10	1-162-970-11	s	CERAMIC, CHIP 0.01uF 10% 25V
C11	1-162-970-11	s	CERAMIC, CHIP 0.01uF 10% 25V
C12	1-162-970-11	s	CERAMIC, CHIP 0.01uF 10% 25V
C13	1-162-970-11	s	CERAMIC, CHIP 0.01uF 10% 25V
C14	1-162-970-11	s	CERAMIC, CHIP 0.01uF 10% 25V
C15	1-162-970-11	s	CERAMIC, CHIP 0.01uF 10% 25V
C16	1-162-970-11	s	CERAMIC, CHIP 0.01uF 10% 25V
C17	1-162-970-11	s	CERAMIC, CHIP 0.01uF 10% 25V
C18	1-162-970-11	s	CERAMIC, CHIP 0.01uF 10% 25V
C19	1-162-970-11	s	CERAMIC, CHIP 0.01uF 10% 25V
C20	1-162-970-11	s	CERAMIC, CHIP 0.01uF 10% 25V
C21	1-162-970-11	s	CERAMIC, CHIP 0.01uF 10% 25V
C22	1-162-970-11	s	CERAMIC, CHIP 0.01uF 10% 25V
C23	1-162-970-11	s	CERAMIC, CHIP 0.01uF 10% 25V
C24	1-162-970-11	s	CERAMIC, CHIP 0.01uF 10% 25V
C25	1-162-970-11	s	CERAMIC, CHIP 0.01uF 10% 25V
C26	1-162-970-11	s	CERAMIC, CHIP 0.01uF 10% 25V
C27	1-162-970-11	s	CERAMIC, CHIP 0.01uF 10% 25V
C28	1-162-970-11	s	CERAMIC, CHIP 0.01uF 10% 25V
C29	1-162-970-11	s	CERAMIC, CHIP 0.01uF 10% 25V
C30	1-162-970-11	s	CERAMIC, CHIP 0.01uF 10% 25V
C31	1-162-970-11	s	CERAMIC, CHIP 0.01uF 10% 25V
C32	1-162-970-11	s	CERAMIC, CHIP 0.01uF 10% 25V
C33	1-162-970-11	s	CERAMIC, CHIP 0.01uF 10% 25V
C34	1-107-689-21	s	TANTAL 1uF 20% 35V
C35	1-162-970-11	s	CERAMIC, CHIP 0.01uF 10% 25V
C36	1-162-970-11	s	CERAMIC, CHIP 0.01uF 10% 25V
C37	1-162-970-11	s	CERAMIC, CHIP 0.01uF 10% 25V
C38	1-162-970-11	s	CERAMIC, CHIP 0.01uF 10% 25V
C39	1-162-970-11	s	CERAMIC, CHIP 0.01uF 10% 25V
C40	1-162-970-11	s	CERAMIC, CHIP 0.01uF 10% 25V
C41	1-162-970-11	s	CERAMIC, CHIP 0.01uF 10% 25V
C42	1-162-970-11	s	CERAMIC, CHIP 0.01uF 10% 25V
C43	1-162-970-11	s	CERAMIC, CHIP 0.01uF 10% 25V
C44	1-162-970-11	s	CERAMIC, CHIP 0.01uF 10% 25V
C45	1-162-970-11	s	CERAMIC, CHIP 0.01uF 10% 25V
C46	1-162-970-11	s	CERAMIC, CHIP 0.01uF 10% 25V
C47	1-162-970-11	s	CERAMIC, CHIP 0.01uF 10% 25V
C48	1-162-970-11	s	CERAMIC, CHIP 0.01uF 10% 25V
C49	1-162-970-11	s	CERAMIC, CHIP 0.01uF 10% 25V
C50	1-162-970-11	s	CERAMIC, CHIP 0.01uF 10% 25V
C51	1-162-970-11	s	CERAMIC, CHIP 0.01uF 10% 25V
C52	1-162-970-11	s	CERAMIC, CHIP 0.01uF 10% 25V
C53	1-162-970-11	s	CERAMIC, CHIP 0.01uF 10% 25V
C54	1-162-970-11	s	CERAMIC, CHIP 0.01uF 10% 25V
C55	1-162-970-11	s	CERAMIC, CHIP 0.01uF 10% 25V

(MB-666 BOARD)

Ref. No. or Q'ty	Part No.	SP	Description
C56	1-162-970-11	s	CERAMIC, CHIP 0.01uF 10% 25V
C57	1-162-970-11	s	CERAMIC, CHIP 0.01uF 10% 25V
C58	1-162-970-11	s	CERAMIC, CHIP 0.01uF 10% 25V
C59	1-162-970-11	s	CERAMIC, CHIP 0.01uF 10% 25V
C60	1-107-689-21	s	TANTAL 1uF 20% 35V
CN1	1-691-845-11	o	CONNECTOR, BOARD TO BOARD 50P
CN2	1-691-845-11	o	CONNECTOR, BOARD TO BOARD 50P
CN3	1-691-845-11	o	CONNECTOR, BOARD TO BOARD 50P
CN4	1-691-845-11	o	CONNECTOR, BOARD TO BOARD 50P
CN11	1-774-995-11	o	CONNECTOR, BOARD TO BOARD 50P
CN12	1-750-933-21	o	PIN, CONNECTOR 12P
CN13	1-766-384-11	s	CONNECTOR, FPC 28P
CN14	1-750-934-21	o	PIN, CONNECTOR 20P
CN15	1-750-934-21	o	PIN, CONNECTOR 20P
CN17	1-695-480-21	o	PIN, CONNECTOR (PC BOARD) 2P
CN18	1-750-933-21	o	PIN, CONNECTOR 12P
CN19	1-750-935-21	o	PIN, CONNECTOR 30P
CN20	1-691-845-11	o	CONNECTOR, BOARD TO BOARD 50P
CN21	1-695-480-21	o	PIN, CONNECTOR (PC BOARD) 2P
CN22	1-750-935-21	o	PIN, CONNECTOR 30P
CN24	1-695-210-21	o	PIN, CONNECTOR (PC BOARD) 15P
CN25	1-695-210-21	o	PIN, CONNECTOR (PC BOARD) 15P
CN26	1-764-092-11	o	PIN, CONNECTOR (PC BOARD) 7P
CN27	1-750-935-21	o	PIN, CONNECTOR 30P
CN29	1-750-935-21	o	PIN, CONNECTOR 30P
CN30	1-750-934-21	o	PIN, CONNECTOR 20P
D1	8-719-059-52	s	DIODE MA3J14300LSO
D2	8-719-059-52	s	DIODE MA3J14300LSO
D3	8-719-059-52	s	DIODE MA3J14300LSO
D4	8-719-422-23	s	DIODE MA8047
D5	8-719-059-52	s	DIODE MA3J14300LSO
D6	8-719-059-52	s	DIODE MA3J14300LSO
D7	8-719-059-52	s	DIODE MA3J14300LSO
D8	8-719-059-52	s	DIODE MA3J14300LSO
D9	8-719-059-52	s	DIODE MA3J14300LSO
IC1	8-759-185-42	s	IC LM4040AIM3-2.5
IC2	8-759-075-97	s	IC LM358PW
IC3	8-759-185-42	s	IC LM4040AIM3-2.5
IC4	8-759-086-41	s	IC X24C02S-3.0
IC5	8-759-075-97	s	IC LM358PW
IC6	8-759-175-04	s	IC PCF8574T-T
Q1	8-729-820-86	s	TRANSISTOR 2SB1121-ST
Q2	8-729-117-32	s	TRANSISTOR 2SC4177
Q3	8-729-928-90	s	TRANSISTOR DTC114EE
Q4	8-729-928-90	s	TRANSISTOR DTC114EE
Q5	8-729-820-86	s	TRANSISTOR 2SB1121-ST
Q6	8-729-117-32	s	TRANSISTOR 2SC4177
Q7	8-729-820-86	s	TRANSISTOR 2SB1121-ST
Q8	8-729-820-90	s	TRANSISTOR 2SD1621-ST
R1	1-216-789-11	s	METAL, CHIP 2.2 5% 1/16W
R2	1-216-789-11	s	METAL, CHIP 2.2 5% 1/16W
R3	1-216-789-11	s	METAL, CHIP 2.2 5% 1/16W
R4	1-216-789-11	s	METAL, CHIP 2.2 5% 1/16W
R5	1-216-789-11	s	METAL, CHIP 2.2 5% 1/16W
R6	1-216-789-11	s	METAL, CHIP 2.2 5% 1/16W
R7	1-216-789-11	s	METAL, CHIP 2.2 5% 1/16W
R8	1-216-789-11	s	METAL, CHIP 2.2 5% 1/16W

(MB-666 BOARD)

Ref. No. or Q'ty	Part No.	SP	Description
R9	1-218-699-11	s	CHIP, METAL 2K 0.50% 1/16W
R10	1-218-692-11	s	CHIP, METAL 1K 0.50% 1/16W
R14	1-216-789-11	s	METAL, CHIP 2.2 5% 1/16W
R15	1-216-789-11	s	METAL, CHIP 2.2 5% 1/16W
R16	1-218-725-11	s	METAL 24K 0.50% 1/16W
R17	1-218-712-11	s	CHIP, METAL 6.8K 0.50% 1/16W
R18	1-218-709-11	s	METAL 5.1K 0.50% 1/16W
R19	1-218-740-11	s	METAL 100K 0.50% 1/16W
R20	1-218-727-11	s	METAL 30K 0.50% 1/16W
R21	1-218-699-11	s	CHIP, METAL 2K 0.50% 1/16W
R22	1-218-723-11	s	METAL 20K 0.50% 1/16W
R23	1-218-699-11	s	CHIP, METAL 2K 0.50% 1/16W
R24	1-218-692-11	s	CHIP, METAL 1K 0.50% 1/16W
R26	1-218-728-11	s	METAL 33K 0.50% 1/16W
R27	1-218-728-11	s	METAL 33K 0.50% 1/16W
R28	1-218-728-11	s	METAL 33K 0.50% 1/16W
R29	1-218-728-11	s	METAL 33K 0.50% 1/16W
R30	1-218-728-11	s	METAL 33K 0.50% 1/16W
R31	1-218-728-11	s	METAL 33K 0.50% 1/16W
R32	1-218-728-11	s	METAL 33K 0.50% 1/16W
R33	1-218-728-11	s	METAL 33K 0.50% 1/16W
R34	1-218-668-11	s	CHIP, METAL 100 0.50% 1/16W
R35	1-218-668-11	s	CHIP, METAL 100 0.50% 1/16W
R36	1-218-740-11	s	METAL 100K 0.50% 1/16W
R37	1-218-740-11	s	METAL 100K 0.50% 1/16W
R38	1-218-668-11	s	CHIP, METAL 100 0.50% 1/16W
R39	1-218-668-11	s	CHIP, METAL 100 0.50% 1/16W
R40	1-218-740-11	s	METAL 100K 0.50% 1/16W
R41	1-218-740-11	s	METAL 100K 0.50% 1/16W
R42	1-218-744-11	s	METAL 150K 0.50% 1/16W
R43	1-218-716-11	s	METAL 10K 0.50% 1/16W
R44	1-216-789-11	s	METAL, CHIP 2.2 5% 1/16W
R45	1-216-789-11	s	METAL, CHIP 2.2 5% 1/16W
R46	1-216-789-11	s	METAL, CHIP 2.2 5% 1/16W
R47	1-216-789-11	s	METAL, CHIP 2.2 5% 1/16W
R49	1-216-789-11	s	METAL, CHIP 2.2 5% 1/16W
R51	1-216-789-11	s	METAL, CHIP 2.2 5% 1/16W
R52	1-216-789-11	s	METAL, CHIP 2.2 5% 1/16W
R53	1-216-789-11	s	METAL, CHIP 2.2 5% 1/16W
R54	1-218-725-11	s	METAL 24K 0.50% 1/16W
R55	1-218-712-11	s	CHIP, METAL 6.8K 0.50% 1/16W
R56	1-218-709-11	s	METAL 5.1K 0.50% 1/16W
R57	1-218-740-11	s	METAL 100K 0.50% 1/16W
R58	1-218-699-11	s	CHIP, METAL 2K 0.50% 1/16W
R59	1-218-723-11	s	METAL 20K 0.50% 1/16W
R61	1-218-740-11	s	METAL 100K 0.50% 1/16W
R62	1-218-740-11	s	METAL 100K 0.50% 1/16W
R63	1-218-740-11	s	METAL 100K 0.50% 1/16W
R64	1-218-740-11	s	METAL 100K 0.50% 1/16W
R65	1-218-740-11	s	METAL 100K 0.50% 1/16W
R66	1-218-740-11	s	METAL 100K 0.50% 1/16W
R67	1-218-740-11	s	METAL 100K 0.50% 1/16W
R68	1-218-740-11	s	METAL 100K 0.50% 1/16W

MX-59 BOARD

Ref. No. or Q'ty	Part No.	SP	Description
1pc	A-8273-212-A	o	MOUNTED CIRCUIT BOARD, MX-59
1pc	3-602-407-01	o	PANEL,MX-59 PC BOARD
1pc	3-724-753-01	o	RING
5pcs	3-729-061-01	s	SCREW (M2X4.5) (TYPE 1)
C1	1-135-149-21	s	TANTALUM, CHIP 2.2uF 10% 10V
C2	1-135-149-21	s	TANTALUM, CHIP 2.2uF 10% 10V
C3	1-164-156-11	s	CERAMIC 0.1uF 25V
C4	1-164-156-11	s	CERAMIC 0.1uF 25V
C5	1-164-156-11	s	CERAMIC 0.1uF 25V
C8	1-162-970-11	s	CERAMIC, CHIP 0.01uF 10% 25V
C11	1-164-156-11	s	CERAMIC 0.1uF 25V
C12	1-164-156-11	s	CERAMIC 0.1uF 25V
C13	1-104-911-11	s	TANTALUM, CHIP 33uF 20% 10V
C14	1-104-911-11	s	TANTALUM, CHIP 33uF 20% 10V
C16	1-162-927-11	s	CERAMIC, CHIP 100PF 5% 50V
C17	1-162-927-11	s	CERAMIC, CHIP 100PF 5% 50V
C18	1-135-177-21	s	TANTALUM, CHIP 1uF 10% 25V
C19	1-135-177-21	s	TANTALUM, CHIP 1uF 10% 25V
C20	1-164-156-11	s	CERAMIC 0.1uF 25V
C21	1-162-915-11	s	CERAMIC, CHIP 10PF 5PF 50V
C22	1-164-156-11	s	CERAMIC 0.1uF 25V
C23	1-164-156-11	s	CERAMIC 0.1uF 25V
C26	1-104-911-11	s	TANTALUM, CHIP 33uF 20% 10V
C27	1-104-911-11	s	TANTALUM, CHIP 33uF 20% 10V
C29	1-162-927-11	s	CERAMIC, CHIP 100PF 5% 50V
C30	1-162-927-11	s	CERAMIC, CHIP 100PF 5% 50V
C32	1-135-177-21	s	TANTALUM, CHIP 1uF 10% 25V
C33	1-135-177-21	s	TANTALUM, CHIP 1uF 10% 25V
C34	1-164-156-11	s	CERAMIC 0.1uF 25V
C35	1-162-915-11	s	CERAMIC, CHIP 10PF 5PF 50V
C102	1-164-156-11	s	CERAMIC 0.1uF 25V
C103	1-164-156-11	s	CERAMIC 0.1uF 25V
C104	1-162-927-11	s	CERAMIC, CHIP 100PF 5% 50V
C105	1-162-907-11	s	CERAMIC, CHIP 2PF 50V
C106	1-104-851-11	s	TANTALUM, CHIP 10uF 20% 10V
C107	1-104-851-11	s	TANTALUM, CHIP 10uF 20% 10V
C108	1-164-156-11	s	CERAMIC 0.1uF 25V
C109	1-104-912-11	s	CHIP,TANTALUM 3.3uF 20% 16V
C110	1-164-156-11	s	CERAMIC 0.1uF 25V
C111	1-164-156-11	s	CERAMIC 0.1uF 25V
C112	1-135-177-21	s	TANTALUM, CHIP 1uF 10% 25V
C113	1-164-156-11	s	CERAMIC 0.1uF 25V
C114	1-164-156-11	s	CERAMIC 0.1uF 25V
C115	1-135-210-11	s	TANTALUM 4.7uF 10% 10V
C116	1-164-156-11	s	CERAMIC 0.1uF 25V
C117	1-164-156-11	s	CERAMIC 0.1uF 25V
C118	1-162-907-11	s	CERAMIC, CHIP 2PF 50V
C119	1-162-927-11	s	CERAMIC, CHIP 100PF 5% 50V
C120	1-104-851-11	s	TANTALUM, CHIP 10uF 20% 10V
C121	1-164-156-11	s	CERAMIC 0.1uF 25V
C122	1-164-156-11	s	CERAMIC 0.1uF 25V
C123	1-162-927-11	s	CERAMIC, CHIP 100PF 5% 50V
C125	1-104-851-11	s	TANTALUM, CHIP 10uF 20% 10V
C126	1-104-851-11	s	TANTALUM, CHIP 10uF 20% 10V
C127	1-164-156-11	s	CERAMIC 0.1uF 25V
C128	1-164-156-11	s	CERAMIC 0.1uF 25V
C129	1-164-156-11	s	CERAMIC 0.1uF 25V
C131	1-104-851-11	s	TANTALUM, CHIP 10uF 20% 10V
C132	1-104-851-11	s	TANTALUM, CHIP 10uF 20% 10V

(MX-59 BOARD)

Ref. No. or Q'ty	Part No.	SP	Description
C133	1-164-156-11	s	CERAMIC 0.1uF 25V
C171	1-162-970-11	s	CERAMIC, CHIP 0.01uF 10% 25V
C181	1-162-907-11	s	CERAMIC, CHIP 2PF 50V
C202	1-164-156-11	s	CERAMIC 0.1uF 25V
C203	1-164-156-11	s	CERAMIC 0.1uF 25V
C204	1-162-927-11	s	CERAMIC, CHIP 100PF 5% 50V
C205	1-162-907-11	s	CERAMIC, CHIP 2PF 50V
C206	1-104-851-11	s	TANTALUM, CHIP 10uF 20% 10V
C207	1-104-851-11	s	TANTALUM, CHIP 10uF 20% 10V
C208	1-164-156-11	s	CERAMIC 0.1uF 25V
C209	1-104-912-11	s	CHIP,TANTALUM 3.3uF 20% 16V
C210	1-164-156-11	s	CERAMIC 0.1uF 25V
C211	1-164-156-11	s	CERAMIC 0.1uF 25V
C212	1-135-177-21	s	TANTALUM, CHIP 1uF 10% 25V
C213	1-164-156-11	s	CERAMIC 0.1uF 25V
C214	1-164-156-11	s	CERAMIC 0.1uF 25V
C215	1-135-210-11	s	TANTALUM 4.7uF 10% 10V
C216	1-164-156-11	s	CERAMIC 0.1uF 25V
C217	1-164-156-11	s	CERAMIC 0.1uF 25V
C218	1-162-907-11	s	CERAMIC, CHIP 2PF 50V
C219	1-162-927-11	s	CERAMIC, CHIP 100PF 5% 50V
C220	1-104-851-11	s	TANTALUM, CHIP 10uF 20% 10V
C221	1-164-156-11	s	CERAMIC 0.1uF 25V
C222	1-164-156-11	s	CERAMIC 0.1uF 25V
C223	1-162-927-11	s	CERAMIC, CHIP 100PF 5% 50V
C225	1-104-851-11	s	TANTALUM, CHIP 10uF 20% 10V
C226	1-104-851-11	s	TANTALUM, CHIP 10uF 20% 10V
C227	1-164-156-11	s	CERAMIC 0.1uF 25V
C228	1-164-156-11	s	CERAMIC 0.1uF 25V
C229	1-164-156-11	s	CERAMIC 0.1uF 25V
C231	1-104-851-11	s	TANTALUM, CHIP 10uF 20% 10V
C232	1-104-851-11	s	TANTALUM, CHIP 10uF 20% 10V
C233	1-164-156-11	s	CERAMIC 0.1uF 25V
C271	1-162-970-11	s	CERAMIC, CHIP 0.01uF 10% 25V
C281	1-162-907-11	s	CERAMIC, CHIP 2PF 50V
C282	1-162-927-11	s	CERAMIC, CHIP 100PF 5% 50V
C283	1-164-156-11	s	CERAMIC 0.1uF 25V
C284	1-164-156-11	s	CERAMIC 0.1uF 25V
C285	1-164-156-11	s	CERAMIC 0.1uF 25V
C286	1-162-907-11	s	CERAMIC, CHIP 2PF 50V
C287	1-164-156-11	s	CERAMIC 0.1uF 25V
C288	1-162-927-11	s	CERAMIC, CHIP 100PF 5% 50V
C289	1-135-211-11	s	TANTALUM, CHIP 6.8uF 20% 6.3V
C290	1-164-156-11	s	CERAMIC 0.1uF 25V
C291	1-104-913-11	s	TANTALUM, CHIP 10uF 20% 16V
C292	1-135-177-21	s	TANTALUM, CHIP 1uF 10% 25V
C293	1-104-852-11	s	TANTALUM, CHIP 22uF 20% 10V
C294	1-164-156-11	s	CERAMIC 0.1uF 25V
C295	1-164-156-11	s	CERAMIC 0.1uF 25V
C296	1-135-211-11	s	TANTALUM, CHIP 6.8uF 20% 6.3V
C297	1-164-156-11	s	CERAMIC 0.1uF 25V
C298	1-162-927-11	s	CERAMIC, CHIP 100PF 5% 50V
C299	1-135-177-21	s	TANTALUM, CHIP 1uF 10% 25V
C302	1-164-156-11	s	CERAMIC 0.1uF 25V
C303	1-164-156-11	s	CERAMIC 0.1uF 25V
C304	1-162-927-11	s	CERAMIC, CHIP 100PF 5% 50V
C305	1-162-907-11	s	CERAMIC, CHIP 2PF 50V
C306	1-104-851-11	s	TANTALUM, CHIP 10uF 20% 10V
C307	1-104-851-11	s	TANTALUM, CHIP 10uF 20% 10V

(MX-59 BOARD)

Ref. No. or Q'ty	Part No.	SP	Description
C308	1-164-156-11	s	CERAMIC 0.1uF 25V
C309	1-104-912-11	s	CHIP,TANTALUM 3.3uF 20% 16V
C310	1-164-156-11	s	CERAMIC 0.1uF 25V
C311	1-164-156-11	s	CERAMIC 0.1uF 25V
C312	1-135-177-21	s	TANTALUM, CHIP 1uF 10% 25V
C313	1-164-156-11	s	CERAMIC 0.1uF 25V
C314	1-164-156-11	s	CERAMIC 0.1uF 25V
C315	1-135-210-11	s	TANTALUM 4.7uF 10% 10V
C316	1-164-156-11	s	CERAMIC 0.1uF 25V
C317	1-164-156-11	s	CERAMIC 0.1uF 25V
C318	1-162-907-11	s	CERAMIC, CHIP 2PF 50V
C319	1-162-927-11	s	CERAMIC, CHIP 100PF 5% 50V
C320	1-104-851-11	s	TANTALUM, CHIP 10uF 20% 10V
C321	1-164-156-11	s	CERAMIC 0.1uF 25V
C322	1-164-156-11	s	CERAMIC 0.1uF 25V
C323	1-162-927-11	s	CERAMIC, CHIP 100PF 5% 50V
C325	1-104-851-11	s	TANTALUM, CHIP 10uF 20% 10V
C326	1-104-851-11	s	TANTALUM, CHIP 10uF 20% 10V
C327	1-164-156-11	s	CERAMIC 0.1uF 25V
C328	1-164-156-11	s	CERAMIC 0.1uF 25V
C329	1-164-156-11	s	CERAMIC 0.1uF 25V
C331	1-104-851-11	s	TANTALUM, CHIP 10uF 20% 10V
C332	1-104-851-11	s	TANTALUM, CHIP 10uF 20% 10V
C333	1-164-156-11	s	CERAMIC 0.1uF 25V
C371	1-162-970-11	s	CERAMIC, CHIP 0.01uF 10% 25V
C381	1-162-907-11	s	CERAMIC, CHIP 2PF 50V
C401	1-135-177-21	s	TANTALUM, CHIP 1uF 10% 25V
C402	1-164-156-11	s	CERAMIC 0.1uF 25V
C403	1-135-177-21	s	TANTALUM, CHIP 1uF 10% 25V
C404	1-164-156-11	s	CERAMIC 0.1uF 25V
C405	1-135-177-21	s	TANTALUM, CHIP 1uF 10% 25V
C406	1-164-156-11	s	CERAMIC 0.1uF 25V
C407	1-164-156-11	s	CERAMIC 0.1uF 25V
C408	1-162-927-11	s	CERAMIC, CHIP 100PF 5% 50V
C409	1-164-156-11	s	CERAMIC 0.1uF 25V
C410	1-164-156-11	s	CERAMIC 0.1uF 25V
C411	1-162-927-11	s	CERAMIC, CHIP 100PF 5% 50V
C412	1-135-177-21	s	TANTALUM, CHIP 1uF 10% 25V
C413	1-164-156-11	s	CERAMIC 0.1uF 25V
C414	1-135-177-21	s	TANTALUM, CHIP 1uF 10% 25V
C415	1-164-156-11	s	CERAMIC 0.1uF 25V
C416	1-135-177-21	s	TANTALUM, CHIP 1uF 10% 25V
C417	1-164-156-11	s	CERAMIC 0.1uF 25V
C418	1-164-156-11	s	CERAMIC 0.1uF 25V
C419	1-162-927-11	s	CERAMIC, CHIP 100PF 5% 50V
C420	1-135-177-21	s	TANTALUM, CHIP 1uF 10% 25V
C421	1-164-156-11	s	CERAMIC 0.1uF 25V
C422	1-135-177-21	s	TANTALUM, CHIP 1uF 10% 25V
C423	1-164-156-11	s	CERAMIC 0.1uF 25V
C424	1-135-177-21	s	TANTALUM, CHIP 1uF 10% 25V
C425	1-164-156-11	s	CERAMIC 0.1uF 25V
C426	1-164-156-11	s	CERAMIC 0.1uF 25V
C427	1-162-927-11	s	CERAMIC, CHIP 100PF 5% 50V
C428	1-164-156-11	s	CERAMIC 0.1uF 25V
C429	1-164-156-11	s	CERAMIC 0.1uF 25V
C430	1-164-156-11	s	CERAMIC 0.1uF 25V
C431	1-162-927-11	s	CERAMIC, CHIP 100PF 5% 50V
C432	1-164-156-11	s	CERAMIC 0.1uF 25V
C433	1-164-156-11	s	CERAMIC 0.1uF 25V

(MX-59 BOARD)

Ref. No. or Q'ty	Part No.	SP	Description
C434	1-162-927-11	s	CERAMIC, CHIP 100PF 5% 50V
C435	1-164-156-11	s	CERAMIC 0.1uF 25V
C436	1-164-156-11	s	CERAMIC 0.1uF 25V
C437	1-162-927-11	s	CERAMIC, CHIP 100PF 5% 50V
C438	1-162-907-11	s	CERAMIC, CHIP 2PF 50V
C439	1-162-907-11	s	CERAMIC, CHIP 2PF 50V
C440	1-162-909-11	s	CERAMIC 4PF 0.25PF 50V
C441	1-162-909-11	s	CERAMIC 4PF 0.25PF 50V
C442	1-162-909-11	s	CERAMIC 4PF 0.25PF 50V
C443	1-162-907-11	s	CERAMIC, CHIP 2PF 50V
C500	1-104-851-11	s	TANTALUM, CHIP 10uF 20% 10V
C600	1-162-907-11	s	CERAMIC, CHIP 2PF 50V
C601	1-164-156-11	s	CERAMIC 0.1uF 25V
C602	1-162-907-11	s	CERAMIC, CHIP 2PF 50V
CN1	1-695-453-11	s	CONNECTOR, BOARD TO BOARD 50P
D101	8-719-059-52	s	DIODE MA3J14300LSO
D201	8-719-059-52	s	DIODE MA3J14300LSO
D301	8-719-059-52	s	DIODE MA3J14300LSO
DL1	1-406-742-11	s	DELAY LINE 13.5nS
DL2	1-406-742-11	s	DELAY LINE 13.5nS
DL3	1-406-742-11	s	DELAY LINE 13.5nS
IC1	8-759-173-16	s	IC TL062CPW
IC2	8-759-064-36	s	IC MB88346BPFV
IC3	8-759-058-62	s	IC TC7S08FU(TE85R)
IC5	8-759-082-60	s	IC TC7S66FU
IC6	8-759-082-58	s	IC TC7W08FU
IC7	8-759-059-50	s	IC MB88351PFV
IC8	8-759-086-41	s	IC X24C02S-3.0
IC9	8-759-076-06	s	IC TL064CPW
IC10	8-759-058-54	s	IC TC7S00FU(TE85R)
IC11	8-759-349-47	s	IC TLC393CPW-E05
IC12	8-759-185-42	s	IC LM4040AIM3-2.5
IC14	8-759-271-18	s	IC NJM1496V
IC21	8-759-349-46	s	IC TLC339CPW-E05
IC100	8-759-147-84	s	IC CXD8072Q
IC101	8-759-054-61	s	IC CLC505AJE
IC102	8-759-173-16	s	IC TL062CPW
IC103	8-759-030-49	s	IC MC1495M
IC104	8-759-054-61	s	IC CLC505AJE
IC105	8-759-054-61	s	IC CLC505AJE
IC106	8-759-173-16	s	IC TL062CPW
IC107	8-759-066-59	s	IC TC74HC4053AFS
IC108	8-759-066-59	s	IC TC74HC4053AFS
IC201	8-759-054-61	s	IC CLC505AJE
IC202	8-759-173-16	s	IC TL062CPW
IC203	8-759-030-49	s	IC MC1495M
IC204	8-759-054-61	s	IC CLC505AJE
IC205	8-759-054-61	s	IC CLC505AJE
IC206	8-759-173-16	s	IC TL062CPW
IC207	8-759-066-59	s	IC TC74HC4053AFS
IC208	8-759-066-59	s	IC TC74HC4053AFS
IC210	8-759-173-16	s	IC TL062CPW
IC211	8-759-054-61	s	IC CLC505AJE
IC212	8-759-054-61	s	IC CLC505AJE
IC213	8-759-054-61	s	IC CLC505AJE
IC301	8-759-054-61	s	IC CLC505AJE
IC302	8-759-173-16	s	IC TL062CPW

(MX-59 BOARD)

Ref. No. or Q'ty	Part No.	SP	Description
IC303	8-759-030-49	s	IC MC1495M
IC304	8-759-054-61	s	IC CLC505AJE
IC305	8-759-054-61	s	IC CLC505AJE
IC306	8-759-173-16	s	IC TL062CPW
IC307	8-759-066-59	s	IC TC74HC4053AFS
IC308	8-759-066-59	s	IC TC74HC4053AFS
IC401	8-759-030-49	s	IC MC1495M
IC402	8-759-030-49	s	IC MC1495M
IC403	8-759-054-61	s	IC CLC505AJE
IC404	8-759-066-59	s	IC TC74HC4053AFS
IC405	8-759-054-61	s	IC CLC505AJE
IC406	8-759-066-59	s	IC TC74HC4053AFS
IC407	8-759-030-49	s	IC MC1495M
IC408	8-759-030-49	s	IC MC1495M
IC409	8-759-054-61	s	IC CLC505AJE
IC410	8-759-030-49	s	IC MC1495M
IC411	8-759-030-49	s	IC MC1495M
IC412	8-759-054-61	s	IC CLC505AJE
IC413	8-759-054-61	s	IC CLC505AJE
IC414	8-759-054-61	s	IC CLC505AJE
IC415	8-759-054-61	s	IC CLC505AJE
IC416	8-759-066-59	s	IC TC74HC4053AFS
IC417	8-759-058-55	s	IC TC7S02FU-TE85L
Q1	8-729-820-86	s	TRANSISTOR 2SB1121-ST
Q2	8-729-820-90	s	TRANSISTOR 2SD1621-ST
Q3	8-729-143-14	s	TRANSISTOR 2SC4176-B35
Q4	8-729-143-07	s	TRANSISTOR 2SA1610-Y33
Q5	8-729-820-86	s	TRANSISTOR 2SB1121-ST
Q6	8-729-820-90	s	TRANSISTOR 2SD1621-ST
Q7	8-729-143-14	s	TRANSISTOR 2SC4176-B35
Q8	8-729-143-07	s	TRANSISTOR 2SA1610-Y33
Q9	8-729-928-90	s	TRANSISTOR DTC114EE
Q10	8-729-928-90	s	TRANSISTOR DTC114EE
Q11	8-729-143-14	s	TRANSISTOR 2SC4176-B35
Q12	8-729-143-14	s	TRANSISTOR 2SC4176-B35
Q13	8-729-143-07	s	TRANSISTOR 2SA1610-Y33
Q14	8-729-143-07	s	TRANSISTOR 2SA1610-Y33
Q15	8-729-143-14	s	TRANSISTOR 2SC4176-B35
Q101	8-729-143-14	s	TRANSISTOR 2SC4176-B35
Q102	8-729-143-07	s	TRANSISTOR 2SA1610-Y33
Q103	8-729-143-07	s	TRANSISTOR 2SA1610-Y33
Q104	8-729-143-14	s	TRANSISTOR 2SC4176-B35
Q105	8-729-143-07	s	TRANSISTOR 2SA1610-Y33
Q106	8-729-143-14	s	TRANSISTOR 2SC4176-B35
Q201	8-729-143-14	s	TRANSISTOR 2SC4176-B35
Q202	8-729-143-07	s	TRANSISTOR 2SA1610-Y33
Q203	8-729-143-07	s	TRANSISTOR 2SA1610-Y33
Q204	8-729-143-14	s	TRANSISTOR 2SC4176-B35
Q205	8-729-143-07	s	TRANSISTOR 2SA1610-Y33
Q206	8-729-143-14	s	TRANSISTOR 2SC4176-B35
Q207	8-729-143-14	s	TRANSISTOR 2SC4176-B35
Q211	8-729-143-14	s	TRANSISTOR 2SC4176-B35
Q212	8-729-143-14	s	TRANSISTOR 2SC4176-B35
Q213	8-729-143-14	s	TRANSISTOR 2SC4176-B35
Q214	8-729-143-14	s	TRANSISTOR 2SC4176-B35
Q220	8-729-928-90	s	TRANSISTOR DTC114EE
Q221	8-729-928-36	s	TRANSISTOR DTA114EE
Q301	8-729-143-14	s	TRANSISTOR 2SC4176-B35

(MX-59 BOARD)

Ref. No. or Q'ty	Part No.	SP	Description
Q302	8-729-143-07	s	TRANSISTOR 2SA1610-Y33
Q303	8-729-143-07	s	TRANSISTOR 2SA1610-Y33
Q304	8-729-143-14	s	TRANSISTOR 2SC4176-B35
Q305	8-729-143-07	s	TRANSISTOR 2SA1610-Y33
Q307	8-729-143-14	s	TRANSISTOR 2SC4176-B35
Q308	8-729-143-07	s	TRANSISTOR 2SA1610-Y33
Q401	8-729-143-14	s	TRANSISTOR 2SC4176-B35
Q402	8-729-143-14	s	TRANSISTOR 2SC4176-B35
Q403	8-729-143-07	s	TRANSISTOR 2SA1610-Y33
Q404	8-729-143-14	s	TRANSISTOR 2SC4176-B35
Q405	8-729-143-14	s	TRANSISTOR 2SC4176-B35
Q406	8-729-143-07	s	TRANSISTOR 2SA1610-Y33
Q407	8-729-143-14	s	TRANSISTOR 2SC4176-B35
Q408	8-729-143-14	s	TRANSISTOR 2SC4176-B35
Q409	8-729-143-07	s	TRANSISTOR 2SA1610-Y33
Q410	8-729-928-90	s	TRANSISTOR DTC114EE
Q411	8-729-928-90	s	TRANSISTOR DTC114EE
Q501	8-729-928-36	s	TRANSISTOR DTA114EE
R1	1-218-716-11	s	METAL 10K 0.50% 1/16W
R2	1-218-644-11	s	METAL 10 0.50% 1/16W
R3	1-218-700-11	s	METAL 2.2K 0.50% 1/16W
R4	1-218-692-11	s	CHIP, METAL 1K 0.50% 1/16W
R5	1-218-692-11	s	CHIP, METAL 1K 0.50% 1/16W
R6	1-218-692-11	s	CHIP, METAL 1K 0.50% 1/16W
R7	1-218-740-11	s	METAL 100K 0.50% 1/16W
R8	1-218-740-11	s	METAL 100K 0.50% 1/16W
R9	1-218-740-11	s	METAL 100K 0.50% 1/16W
R10	1-218-740-11	s	METAL 100K 0.50% 1/16W
R11	1-218-740-11	s	METAL 100K 0.50% 1/16W
R12	1-218-668-11	s	CHIP, METAL 100 0.50% 1/16W
R13	1-218-668-11	s	CHIP, METAL 100 0.50% 1/16W
R14	1-218-675-11	s	CHIP, METAL 200 0.50% 1/16W
R15	1-218-728-11	s	METAL 33K 0.50% 1/16W
R16	1-216-864-11	s	METAL, CHIP 0 5% 1/16W
R17	1-218-870-11	s	CHIP, METAL 9.1K 0.50% 1/16W
R18	1-218-740-11	s	METAL 100K 0.50% 1/16W
R19	1-218-870-11	s	CHIP, METAL 9.1K 0.50% 1/16W
R20	1-218-700-11	s	METAL 2.2K 0.50% 1/16W
R21	1-218-692-11	s	CHIP, METAL 1K 0.50% 1/16W
R22	1-218-716-11	s	METAL 10K 0.50% 1/16W
R23	1-218-724-11	s	CHIP, METAL 22K 5% 1/16W
R24	1-218-724-11	s	CHIP, METAL 22K 5% 1/16W
R25	1-218-740-11	s	METAL 100K 0.50% 1/16W
R26	1-218-724-11	s	CHIP, METAL 22K 5% 1/16W
R27	1-218-716-11	s	METAL 10K 0.50% 1/16W
R28	1-218-699-11	s	CHIP, METAL 2K 0.50% 1/16W
R29	1-218-716-11	s	METAL 10K 0.50% 1/16W
R30	1-218-708-11	s	METAL 4.7K 0.50% 1/16W
R31	1-218-675-11	s	CHIP, METAL 200 0.50% 1/16W
R32	1-218-675-11	s	CHIP, METAL 200 0.50% 1/16W
R33	1-218-692-11	s	CHIP, METAL 1K 0.50% 1/16W
R34	1-218-700-11	s	METAL 2.2K 0.50% 1/16W
R35	1-218-701-11	s	METAL 2.4K 0.50% 1/16W
R36	1-218-675-11	s	CHIP, METAL 200 0.50% 1/16W
R37	1-218-692-11	s	CHIP, METAL 1K 0.50% 1/16W
R38	1-218-716-11	s	METAL 10K 0.50% 1/16W
R39	1-218-675-11	s	CHIP, METAL 200 0.50% 1/16W
R40	1-218-692-11	s	CHIP, METAL 1K 0.50% 1/16W

(MX-59 BOARD)

Ref. No. or Q'ty	Part No.	SP	Description
R41	1-218-716-11	s	METAL 10K 0.50% 1/16W
R42	1-218-675-11	s	CHIP, METAL 200 0.50% 1/16W
R43	1-218-692-11	s	CHIP, METAL 1K 0.50% 1/16W
R44	1-218-675-11	s	CHIP, METAL 200 0.50% 1/16W
R45	1-218-692-11	s	CHIP, METAL 1K 0.50% 1/16W
R46	1-218-716-11	s	METAL 10K 0.50% 1/16W
R47	1-218-716-11	s	METAL 10K 0.50% 1/16W
R48	1-218-692-11	s	CHIP, METAL 1K 0.50% 1/16W
R49	1-218-692-11	s	CHIP, METAL 1K 0.50% 1/16W
R50	1-218-675-11	s	CHIP, METAL 200 0.50% 1/16W
R51	1-218-675-11	s	CHIP, METAL 200 0.50% 1/16W
R52	1-218-716-11	s	METAL 10K 0.50% 1/16W
R53	1-218-664-11	s	CHIP, METAL 68 0.50% 1/16W
R54	1-218-716-11	s	METAL 10K 0.50% 1/16W
R55	1-218-692-11	s	CHIP, METAL 1K 0.50% 1/16W
R56	1-218-870-11	s	CHIP, METAL 9.1K 0.50% 1/16W
R57	1-218-701-11	s	METAL 2.4K 0.50% 1/16W
R58	1-218-740-11	s	METAL 100K 0.50% 1/16W
R59	1-218-740-11	s	METAL 100K 0.50% 1/16W
R60	1-218-708-11	s	METAL 4.7K 0.50% 1/16W
R61	1-218-700-11	s	METAL 2.2K 0.50% 1/16W
R63	1-218-740-11	s	METAL 100K 0.50% 1/16W
R65	1-218-709-11	s	METAL 5.1K 0.50% 1/16W
R66	1-218-708-11	s	METAL 4.7K 0.50% 1/16W
R67	1-218-700-11	s	METAL 2.2K 0.50% 1/16W
R101	1-218-728-11	s	METAL 33K 0.50% 1/16W
R102	1-218-733-11	s	CHIP, METAL 51K 0.50% 1/16W
R108	1-218-652-11	s	CHIP, METAL 22 0.50% 1/16W
R110	1-218-712-11	s	CHIP, METAL 6.8K 0.50% 1/16W
R111	1-218-740-11	s	METAL 100K 0.50% 1/16W
R112	1-218-740-11	s	METAL 100K 0.50% 1/16W
R113	1-218-692-11	s	CHIP, METAL 1K 0.50% 1/16W
R114	1-218-716-11	s	METAL 10K 0.50% 1/16W
R115	1-218-660-91	s	CHIP, METAL 47 0.50% 1/16W
R116	1-218-692-11	s	CHIP, METAL 1K 0.50% 1/16W
R117	1-218-740-11	s	METAL 100K 0.50% 1/16W
R118	1-218-740-11	s	METAL 100K 0.50% 1/16W
R119	1-218-698-11	s	METAL 1.8K 0.50% 1/16W
R120	1-218-700-11	s	METAL 2.2K 0.50% 1/16W
R121	1-218-704-11	s	METAL 3.3K 0.50% 1/16W
R122	1-218-713-11	s	CHIP, METAL 7.5K 0.50% 1/16W
R123	1-218-713-11	s	CHIP, METAL 7.5K 0.50% 1/16W
R124	1-218-702-11	s	CHIP, METAL 2.7K 0.50% 1/16W
R125	1-218-723-11	s	METAL 20K 0.50% 1/16W
R126	1-218-716-11	s	METAL 10K 0.50% 1/16W
R127	1-218-716-11	s	METAL 10K 0.50% 1/16W
R128	1-218-708-11	s	METAL 4.7K 0.50% 1/16W
R129	1-218-668-11	s	CHIP, METAL 100 0.50% 1/16W
R130	1-218-706-11	s	METAL 3.9K 0.50% 1/16W
R131	1-218-724-11	s	CHIP, METAL 22K 5% 1/16W
R132	1-218-660-91	s	CHIP, METAL 47 0.50% 1/16W
R133	1-218-710-11	s	CHIP, METAL 5.6K 0.50% 1/16W
R134	1-218-708-11	s	METAL 4.7K 0.50% 1/16W
R135	1-218-702-11	s	CHIP, METAL 2.7K 0.50% 1/16W
R136	1-218-691-11	s	CHIP, METAL 910 0.50% 1/16W
R137	1-218-705-11	s	METAL 3.6K 0.50% 1/16W
R138	1-218-673-11	s	CHIP, METAL 160 0.50% 1/16W
R139	1-218-659-11	s	METAL 43 0.50% 1/16W
R140	1-218-692-11	s	CHIP, METAL 1K 0.50% 1/16W

(MX-59 BOARD)

Ref. No. or Q'ty	Part No.	SP	Description
R141	1-218-748-11	s	CHIP, METAL 220K 0.50% 1/16W
R144	1-218-691-11	s	CHIP, METAL 910 0.50% 1/16W
R145	1-218-708-11	s	METAL 4.7K 0.50% 1/16W
R146	1-218-851-11	s	CHIP, METAL 1.5K 0.50% 1/16W
R147	1-218-716-11	s	METAL 10K 0.50% 1/16W
R148	1-218-692-11	s	CHIP, METAL 1K 0.50% 1/16W
R149	1-218-692-11	s	CHIP, METAL 1K 0.50% 1/16W
R150	1-218-748-11	s	CHIP, METAL 220K 0.50% 1/16W
R151	1-218-716-11	s	METAL 10K 0.50% 1/16W
R152	1-218-660-91	s	CHIP, METAL 47 0.50% 1/16W
R153	1-218-692-11	s	CHIP, METAL 1K 0.50% 1/16W
R154	1-218-713-11	s	CHIP, METAL 7.5K 0.50% 1/16W
R155	1-218-716-11	s	METAL 10K 0.50% 1/16W
R156	1-218-652-11	s	CHIP, METAL 22 0.50% 1/16W
R157	1-218-740-11	s	METAL 100K 0.50% 1/16W
R158	1-218-733-11	s	CHIP, METAL 51K 0.50% 1/16W
R159	1-218-736-11	s	METAL 68K 0.50% 1/16W
R162	1-218-740-11	s	METAL 100K 0.50% 1/16W
R163	1-218-734-11	s	CHIP, METAL 56K 5% 1/16W
R171	1-218-668-11	s	CHIP, METAL 100 0.50% 1/16W
R201	1-218-728-11	s	METAL 33K 0.50% 1/16W
R202	1-218-733-11	s	CHIP, METAL 51K 0.50% 1/16W
R208	1-218-652-11	s	CHIP, METAL 22 0.50% 1/16W
R210	1-218-712-11	s	CHIP, METAL 6.8K 0.50% 1/16W
R211	1-218-740-11	s	METAL 100K 0.50% 1/16W
R212	1-218-740-11	s	METAL 100K 0.50% 1/16W
R213	1-218-692-11	s	CHIP, METAL 1K 0.50% 1/16W
R214	1-218-716-11	s	METAL 10K 0.50% 1/16W
R215	1-218-660-91	s	CHIP, METAL 47 0.50% 1/16W
R216	1-218-692-11	s	CHIP, METAL 1K 0.50% 1/16W
R217	1-218-740-11	s	METAL 100K 0.50% 1/16W
R218	1-218-740-11	s	METAL 100K 0.50% 1/16W
R219	1-218-698-11	s	METAL 1.8K 0.50% 1/16W
R220	1-218-700-11	s	METAL 2.2K 0.50% 1/16W
R221	1-218-704-11	s	METAL 3.3K 0.50% 1/16W
R222	1-218-713-11	s	CHIP, METAL 7.5K 0.50% 1/16W
R223	1-218-713-11	s	CHIP, METAL 7.5K 0.50% 1/16W
R224	1-218-702-11	s	CHIP, METAL 2.7K 0.50% 1/16W
R225	1-218-723-11	s	METAL 20K 0.50% 1/16W
R226	1-218-716-11	s	METAL 10K 0.50% 1/16W
R227	1-218-716-11	s	METAL 10K 0.50% 1/16W
R228	1-218-668-11	s	CHIP, METAL 100 0.50% 1/16W
R229	1-218-708-11	s	METAL 4.7K 0.50% 1/16W
R230	1-218-706-11	s	METAL 3.9K 0.50% 1/16W
R231	1-218-724-11	s	CHIP, METAL 22K 5% 1/16W
R232	1-218-710-11	s	CHIP, METAL 5.6K 0.50% 1/16W
R233	1-218-660-91	s	CHIP, METAL 47 0.50% 1/16W
R234	1-218-708-11	s	METAL 4.7K 0.50% 1/16W
R235	1-218-702-11	s	CHIP, METAL 2.7K 0.50% 1/16W
R236	1-218-691-11	s	CHIP, METAL 910 0.50% 1/16W
R237	1-218-705-11	s	METAL 3.6K 0.50% 1/16W
R238	1-218-673-11	s	CHIP, METAL 160 0.50% 1/16W
R239	1-218-659-11	s	METAL 43 0.50% 1/16W
R240	1-218-692-11	s	CHIP, METAL 1K 0.50% 1/16W
R241	1-218-748-11	s	CHIP, METAL 220K 0.50% 1/16W
R244	1-218-691-11	s	CHIP, METAL 910 0.50% 1/16W
R245	1-218-708-11	s	METAL 4.7K 0.50% 1/16W
R246	1-218-851-11	s	CHIP, METAL 1.5K 0.50% 1/16W
R247	1-218-716-11	s	METAL 10K 0.50% 1/16W

(MX-59 BOARD)

Ref. No. or Q'ty	Part No.	SP	Description
R248	1-218-692-11	s	CHIP, METAL 1K 0.50% 1/16W
R249	1-218-748-11	s	CHIP, METAL 220K 0.50% 1/16W
R250	1-218-716-11	s	METAL 10K 0.50% 1/16W
R251	1-218-660-91	s	CHIP, METAL 47 0.50% 1/16W
R252	1-218-692-11	s	CHIP, METAL 1K 0.50% 1/16W
R253	1-218-713-11	s	CHIP, METAL 7.5K 0.50% 1/16W
R254	1-218-716-11	s	METAL 10K 0.50% 1/16W
R255	1-218-652-11	s	CHIP, METAL 22 0.50% 1/16W
R256	1-218-740-11	s	METAL 100K 0.50% 1/16W
R257	1-218-733-11	s	CHIP, METAL 51K 0.50% 1/16W
R258	1-218-736-11	s	METAL 68K 0.50% 1/16W
R260	1-218-716-11	s	METAL 10K 0.50% 1/16W
R261	1-218-716-11	s	METAL 10K 0.50% 1/16W
R262	1-218-740-11	s	METAL 100K 0.50% 1/16W
R263	1-218-734-11	s	CHIP, METAL 56K 5% 1/16W
R270	1-218-668-11	s	CHIP, METAL 100 0.50% 1/16W
R271	1-218-668-11	s	CHIP, METAL 100 0.50% 1/16W
R272	1-218-718-11	s	CHIP, METAL 12K 0.50% 1/16W
R273	1-218-734-11	s	CHIP, METAL 56K 5% 1/16W
R274	1-216-864-11	s	METAL, CHIP 0 5% 1/16W
R275	1-218-740-11	s	METAL 100K 0.50% 1/16W
R276	1-218-692-11	s	CHIP, METAL 1K 0.50% 1/16W
R277	1-218-692-11	s	CHIP, METAL 1K 0.50% 1/16W
R278	1-218-724-11	s	CHIP, METAL 22K 5% 1/16W
R279	1-218-724-11	s	CHIP, METAL 22K 5% 1/16W
R280	1-218-668-11	s	CHIP, METAL 100 0.50% 1/16W
R281	1-218-668-11	s	CHIP, METAL 100 0.50% 1/16W
R282	1-218-692-11	s	CHIP, METAL 1K 0.50% 1/16W
R283	1-218-699-11	s	CHIP, METAL 2K 0.50% 1/16W
R284	1-218-692-11	s	CHIP, METAL 1K 0.50% 1/16W
R285	1-218-824-11	s	CHIP, METAL 110 0.50% 1/16W
R286	1-218-824-11	s	CHIP, METAL 110 0.50% 1/16W
R287	1-218-738-11	s	CHIP, METAL 82K 0.50% 1/16W
R288	1-218-745-11	s	CHIP, METAL 160K 0.50% 1/16W
R289	1-218-692-11	s	CHIP, METAL 1K 0.50% 1/16W
R290	1-218-684-11	s	CHIP, METAL 470 0.50% 1/16W
R291	1-218-716-11	s	METAL 10K 0.50% 1/16W
R292	1-218-720-11	s	METAL 15K 0.50% 1/16W
R293	1-218-706-11	s	METAL 3.9K 0.50% 1/16W
R294	1-218-703-11	s	CHIP, METAL 3K 0.50% 1/16W
R295	1-218-716-11	s	METAL 10K 0.50% 1/16W
R296	1-218-730-11	s	CHIP, METAL 39K 0.50% 1/16W
R297	1-218-716-11	s	METAL 10K 0.50% 1/16W
R298	1-218-734-11	s	CHIP, METAL 56K 5% 1/16W
R299	1-218-716-11	s	METAL 10K 0.50% 1/16W
R301	1-218-728-11	s	METAL 33K 0.50% 1/16W
R302	1-218-733-11	s	CHIP, METAL 51K 0.50% 1/16W
R308	1-218-652-11	s	CHIP, METAL 22 0.50% 1/16W
R310	1-218-712-11	s	CHIP, METAL 6.8K 0.50% 1/16W
R311	1-218-740-11	s	METAL 100K 0.50% 1/16W
R312	1-218-740-11	s	METAL 100K 0.50% 1/16W
R313	1-218-692-11	s	CHIP, METAL 1K 0.50% 1/16W
R314	1-218-716-11	s	METAL 10K 0.50% 1/16W
R315	1-218-660-91	s	CHIP, METAL 47 0.50% 1/16W
R316	1-218-692-11	s	CHIP, METAL 1K 0.50% 1/16W
R317	1-218-740-11	s	METAL 100K 0.50% 1/16W
R318	1-218-740-11	s	METAL 100K 0.50% 1/16W
R319	1-218-698-11	s	METAL 1.8K 0.50% 1/16W
R320	1-218-700-11	s	METAL 2.2K 0.50% 1/16W

(MX-59 BOARD)

Ref. No. or Q'ty	Part No.	SP	Description
R321	1-218-704-11	s	METAL 3.3K 0.50% 1/16W
R322	1-218-713-11	s	CHIP, METAL 7.5K 0.50% 1/16W
R323	1-218-713-11	s	CHIP, METAL 7.5K 0.50% 1/16W
R324	1-218-702-11	s	CHIP, METAL 2.7K 0.50% 1/16W
R325	1-218-723-11	s	METAL 20K 0.50% 1/16W
R326	1-218-716-11	s	METAL 10K 0.50% 1/16W
R327	1-218-716-11	s	METAL 10K 0.50% 1/16W
R328	1-218-668-11	s	CHIP, METAL 100 0.50% 1/16W
R329	1-218-708-11	s	METAL 4.7K 0.50% 1/16W
R330	1-218-706-11	s	METAL 3.9K 0.50% 1/16W
R331	1-218-724-11	s	CHIP, METAL 22K 5% 1/16W
R332	1-218-660-91	s	CHIP, METAL 47 0.50% 1/16W
R333	1-218-710-11	s	CHIP, METAL 5.6K 0.50% 1/16W
R334	1-218-708-11	s	METAL 4.7K 0.50% 1/16W
R335	1-218-702-11	s	CHIP, METAL 2.7K 0.50% 1/16W
R336	1-218-691-11	s	CHIP, METAL 910 0.50% 1/16W
R337	1-218-705-11	s	METAL 3.6K 0.50% 1/16W
R338	1-218-673-11	s	CHIP, METAL 160 0.50% 1/16W
R339	1-218-659-11	s	METAL 43 0.50% 1/16W
R340	1-218-692-11	s	CHIP, METAL 1K 0.50% 1/16W
R341	1-218-748-11	s	CHIP, METAL 220K 0.50% 1/16W
R344	1-218-691-11	s	CHIP, METAL 910 0.50% 1/16W
R345	1-218-708-11	s	METAL 4.7K 0.50% 1/16W
R346	1-218-851-11	s	CHIP, METAL 1.5K 0.50% 1/16W
R347	1-218-716-11	s	METAL 10K 0.50% 1/16W
R348	1-218-692-11	s	CHIP, METAL 1K 0.50% 1/16W
R349	1-218-748-11	s	CHIP, METAL 220K 0.50% 1/16W
R350	1-218-716-11	s	METAL 10K 0.50% 1/16W
R351	1-218-660-91	s	CHIP, METAL 47 0.50% 1/16W
R352	1-218-692-11	s	CHIP, METAL 1K 0.50% 1/16W
R353	1-218-713-11	s	CHIP, METAL 7.5K 0.50% 1/16W
R354	1-218-716-11	s	METAL 10K 0.50% 1/16W
R355	1-218-652-11	s	CHIP, METAL 22 0.50% 1/16W
R356	1-218-740-11	s	METAL 100K 0.50% 1/16W
R357	1-218-733-11	s	CHIP, METAL 51K 0.50% 1/16W
R358	1-218-736-11	s	METAL 68K 0.50% 1/16W
R362	1-218-740-11	s	METAL 100K 0.50% 1/16W
R363	1-218-734-11	s	CHIP, METAL 56K 5% 1/16W
R365	1-218-716-11	s	METAL 10K 0.50% 1/16W
R366	1-218-708-11	s	METAL 4.7K 0.50% 1/16W
R367	1-218-668-11	s	CHIP, METAL 100 0.50% 1/16W
R370	1-218-740-11	s	METAL 100K 0.50% 1/16W
R371	1-218-668-11	s	CHIP, METAL 100 0.50% 1/16W
R372	1-218-692-11	s	CHIP, METAL 1K 0.50% 1/16W
R401	1-218-702-11	s	CHIP, METAL 2.7K 0.50% 1/16W
R402	1-218-676-11	s	METAL 220 0.50% 1/16W
R403	1-218-702-11	s	CHIP, METAL 2.7K 0.50% 1/16W
R404	1-218-702-11	s	CHIP, METAL 2.7K 0.50% 1/16W
R405	1-218-713-11	s	CHIP, METAL 7.5K 0.50% 1/16W
R406	1-218-713-11	s	CHIP, METAL 7.5K 0.50% 1/16W
R407	1-218-702-11	s	CHIP, METAL 2.7K 0.50% 1/16W
R408	1-218-716-11	s	METAL 10K 0.50% 1/16W
R409	1-218-723-11	s	METAL 20K 0.50% 1/16W
R410	1-218-716-11	s	METAL 10K 0.50% 1/16W
R411	1-218-702-11	s	CHIP, METAL 2.7K 0.50% 1/16W
R412	1-218-676-11	s	METAL 220 0.50% 1/16W
R413	1-218-702-11	s	CHIP, METAL 2.7K 0.50% 1/16W
R414	1-218-702-11	s	CHIP, METAL 2.7K 0.50% 1/16W
R415	1-218-713-11	s	CHIP, METAL 7.5K 0.50% 1/16W

(MX-59 BOARD)

Ref. No. or Q'ty	Part No.	SP	Description
R416	1-218-694-11	s	CHIP, METAL 1.2K 0.50% 1/16W
R417	1-218-713-11	s	CHIP, METAL 7.5K 0.50% 1/16W
R418	1-218-702-11	s	CHIP, METAL 2.7K 0.50% 1/16W
R419	1-218-716-11	s	METAL 10K 0.50% 1/16W
R420	1-218-723-11	s	METAL 20K 0.50% 1/16W
R421	1-218-716-11	s	METAL 10K 0.50% 1/16W
R422	1-218-720-11	s	METAL 15K 0.50% 1/16W
R423	1-218-716-11	s	METAL 10K 0.50% 1/16W
R424	1-218-851-11	s	CHIP, METAL 1.5K 0.50% 1/16W
R425	1-218-748-11	s	CHIP, METAL 220K 0.50% 1/16W
R426	1-218-713-11	s	CHIP, METAL 7.5K 0.50% 1/16W
R427	1-218-713-11	s	CHIP, METAL 7.5K 0.50% 1/16W
R428	1-218-851-11	s	CHIP, METAL 1.5K 0.50% 1/16W
R429	1-218-851-11	s	CHIP, METAL 1.5K 0.50% 1/16W
R430	1-218-736-11	s	METAL 68K 0.50% 1/16W
R431	1-218-702-11	s	CHIP, METAL 2.7K 0.50% 1/16W
R432	1-218-676-11	s	METAL 220 0.50% 1/16W
R433	1-218-702-11	s	CHIP, METAL 2.7K 0.50% 1/16W
R434	1-218-702-11	s	CHIP, METAL 2.7K 0.50% 1/16W
R435	1-218-713-11	s	CHIP, METAL 7.5K 0.50% 1/16W
R436	1-218-713-11	s	CHIP, METAL 7.5K 0.50% 1/16W
R437	1-218-702-11	s	CHIP, METAL 2.7K 0.50% 1/16W
R438	1-218-716-11	s	METAL 10K 0.50% 1/16W
R439	1-218-723-11	s	METAL 20K 0.50% 1/16W
R440	1-218-716-11	s	METAL 10K 0.50% 1/16W
R441	1-218-702-11	s	CHIP, METAL 2.7K 0.50% 1/16W
R442	1-218-676-11	s	METAL 220 0.50% 1/16W
R443	1-218-702-11	s	CHIP, METAL 2.7K 0.50% 1/16W
R444	1-218-702-11	s	CHIP, METAL 2.7K 0.50% 1/16W
R445	1-218-713-11	s	CHIP, METAL 7.5K 0.50% 1/16W
R446	1-218-694-11	s	CHIP, METAL 1.2K 0.50% 1/16W
R447	1-218-713-11	s	CHIP, METAL 7.5K 0.50% 1/16W
R448	1-218-702-11	s	CHIP, METAL 2.7K 0.50% 1/16W
R449	1-218-716-11	s	METAL 10K 0.50% 1/16W
R450	1-218-723-11	s	METAL 20K 0.50% 1/16W
R451	1-218-716-11	s	METAL 10K 0.50% 1/16W
R452	1-218-720-11	s	METAL 15K 0.50% 1/16W
R453	1-218-716-11	s	METAL 10K 0.50% 1/16W
R454	1-218-851-11	s	CHIP, METAL 1.5K 0.50% 1/16W
R455	1-218-748-11	s	CHIP, METAL 220K 0.50% 1/16W
R456	1-218-702-11	s	CHIP, METAL 2.7K 0.50% 1/16W
R457	1-218-676-11	s	METAL 220 0.50% 1/16W
R458	1-218-702-11	s	CHIP, METAL 2.7K 0.50% 1/16W
R459	1-218-702-11	s	CHIP, METAL 2.7K 0.50% 1/16W
R460	1-218-713-11	s	CHIP, METAL 7.5K 0.50% 1/16W
R461	1-218-713-11	s	CHIP, METAL 7.5K 0.50% 1/16W
R462	1-218-702-11	s	CHIP, METAL 2.7K 0.50% 1/16W
R463	1-218-716-11	s	METAL 10K 0.50% 1/16W
R464	1-218-723-11	s	METAL 20K 0.50% 1/16W
R465	1-218-716-11	s	METAL 10K 0.50% 1/16W
R466	1-218-702-11	s	CHIP, METAL 2.7K 0.50% 1/16W
R467	1-218-676-11	s	METAL 220 0.50% 1/16W
R468	1-218-702-11	s	CHIP, METAL 2.7K 0.50% 1/16W
R469	1-218-702-11	s	CHIP, METAL 2.7K 0.50% 1/16W
R470	1-218-713-11	s	CHIP, METAL 7.5K 0.50% 1/16W
R471	1-218-694-11	s	CHIP, METAL 1.2K 0.50% 1/16W
R472	1-218-713-11	s	CHIP, METAL 7.5K 0.50% 1/16W
R473	1-218-702-11	s	CHIP, METAL 2.7K 0.50% 1/16W
R474	1-218-716-11	s	METAL 10K 0.50% 1/16W

(MX-59 BOARD)

Ref. No. or Q'ty	Part No.	SP	Description
R475	1-218-723-11	s	METAL 20K 0.50% 1/16W
R476	1-218-716-11	s	METAL 10K 0.50% 1/16W
R477	1-218-720-11	s	METAL 15K 0.50% 1/16W
R478	1-218-716-11	s	METAL 10K 0.50% 1/16W
R479	1-218-851-11	s	CHIP, METAL 1.5K 0.50% 1/16W
R480	1-218-748-11	s	CHIP, METAL 220K 0.50% 1/16W
R481	1-218-668-11	s	CHIP, METAL 100 0.50% 1/16W
R482	1-218-716-11	s	METAL 10K 0.50% 1/16W
R483	1-218-668-11	s	CHIP, METAL 100 0.50% 1/16W
R484	1-218-708-11	s	METAL 4.7K 0.50% 1/16W
R485	1-218-668-11	s	CHIP, METAL 100 0.50% 1/16W
R486	1-218-716-11	s	METAL 10K 0.50% 1/16W
R487	1-218-668-11	s	CHIP, METAL 100 0.50% 1/16W
R488	1-218-708-11	s	METAL 4.7K 0.50% 1/16W
R489	1-218-668-11	s	CHIP, METAL 100 0.50% 1/16W
R490	1-218-716-11	s	METAL 10K 0.50% 1/16W
R491	1-218-668-11	s	CHIP, METAL 100 0.50% 1/16W
R492	1-218-708-11	s	METAL 4.7K 0.50% 1/16W
R493	1-218-707-11	s	CHIP, METAL 4.3K 0.50% 1/16W
R494	1-218-737-11	s	CHIP, METAL 75K 0.50% 1/16W
R495	1-218-744-11	s	METAL 150K 0.50% 1/16W
R496	1-218-744-11	s	METAL 150K 0.50% 1/16W
R497	1-218-699-11	s	CHIP, METAL 2K 0.50% 1/16W
R498	1-218-699-11	s	CHIP, METAL 2K 0.50% 1/16W
R499	1-218-692-11	s	CHIP, METAL 1K 0.50% 1/16W
R500	1-218-692-11	s	CHIP, METAL 1K 0.50% 1/16W
R501	1-218-692-11	s	CHIP, METAL 1K 0.50% 1/16W
R502	1-218-736-11	s	METAL 68K 0.50% 1/16W
R503	1-218-699-11	s	CHIP, METAL 2K 0.50% 1/16W
R504	1-218-699-11	s	CHIP, METAL 2K 0.50% 1/16W
R505	1-218-692-11	s	CHIP, METAL 1K 0.50% 1/16W
R506	1-218-692-11	s	CHIP, METAL 1K 0.50% 1/16W
R507	1-218-692-11	s	CHIP, METAL 1K 0.50% 1/16W
R508	1-218-736-11	s	METAL 68K 0.50% 1/16W
R509	1-218-699-11	s	CHIP, METAL 2K 0.50% 1/16W
R510	1-218-699-11	s	CHIP, METAL 2K 0.50% 1/16W
R511	1-218-692-11	s	CHIP, METAL 1K 0.50% 1/16W
R512	1-218-692-11	s	CHIP, METAL 1K 0.50% 1/16W
R513	1-218-692-11	s	CHIP, METAL 1K 0.50% 1/16W
R514	1-218-736-11	s	METAL 68K 0.50% 1/16W
R516	1-218-745-11	s	CHIP, METAL 160K 0.50% 1/16W
R517	1-218-745-11	s	CHIP, METAL 160K 0.50% 1/16W
R520	1-218-683-11	s	CHIP, METAL 430 0.50% 1/16W
R521	1-218-683-11	s	CHIP, METAL 430 0.50% 1/16W
R522	1-218-680-11	s	METAL 330 0.50% 1/16W
R523	1-218-680-11	s	METAL 330 0.50% 1/16W
R524	1-218-682-11	s	METAL 390 0.50% 1/16W
R525	1-218-682-11	s	METAL 390 0.50% 1/16W
R526	1-218-680-11	s	METAL 330 0.50% 1/16W
R527	1-218-680-11	s	METAL 330 0.50% 1/16W
R528	1-218-680-11	s	METAL 330 0.50% 1/16W
R529	1-218-680-11	s	METAL 330 0.50% 1/16W
R530	1-218-680-11	s	METAL 330 0.50% 1/16W
R531	1-218-680-11	s	METAL 330 0.50% 1/16W
R532	1-218-644-11	s	METAL 10 0.50% 1/16W
R533	1-218-644-11	s	METAL 10 0.50% 1/16W
R534	1-218-644-11	s	METAL 10 0.50% 1/16W
R600	1-218-745-11	s	CHIP, METAL 160K 0.50% 1/16W
R601	1-218-700-11	s	METAL 2.2K 0.50% 1/16W

(MX-59 BOARD)

Ref. No. or Q'ty	Part No.	SP	Description
R602	1-218-700-11	s	METAL 2.2K 0.50% 1/16W
R603	1-218-652-11	s	CHIP, METAL 22 0.50% 1/16W
R604	1-218-652-11	s	CHIP, METAL 22 0.50% 1/16W
R605	1-218-652-11	s	CHIP, METAL 22 0.50% 1/16W
R606	1-218-652-11	s	CHIP, METAL 22 0.50% 1/16W
RV1	1-241-834-21	s	RES, ADJ, METAL 20K
RV101	1-241-836-21	s	RES, ADJ, METAL 100K
RV103	1-241-827-11	s	RES, ADJ, METAL 200
RV201	1-241-836-21	s	RES, ADJ, METAL 100K
RV203	1-241-827-11	s	RES, ADJ, METAL 200
RV210	1-241-829-21	s	RES, ADJ, METAL 1K
RV301	1-241-836-21	s	RES, ADJ, METAL 100K
RV303	1-241-827-11	s	RES, ADJ, METAL 200
RV401	1-241-741-11	s	RES, ADJ METAL 50K

PR-200 BOARD

Ref. No. or Q'ty	Part No.	SP	Description
1pc	A-8273-213-A	o	MOUNTED CIRCUIT BOARD, PR-200
1pc	3-602-408-01	o	PANEL,PR-200 PC BOARD
1pc	3-724-753-01	o	RING
5pcs	3-729-061-01	s	SCREW (M2X4.5) (TYPE 1)
C1	1-162-915-11	s	CERAMIC, CHIP 10PF 5PF 50V
C3	1-164-156-11	s	CERAMIC 0.1uF 25V
C4	1-164-156-11	s	CERAMIC 0.1uF 25V
C5	1-162-927-11	s	CERAMIC, CHIP 100PF 5% 50V
C6	1-164-156-11	s	CERAMIC 0.1uF 25V
C7	1-162-907-11	s	CERAMIC, CHIP 2PF 50V
C8	1-135-177-21	s	TANTALUM, CHIP 1uF 10% 25V
C9	1-164-156-11	s	CERAMIC 0.1uF 25V
C10	1-135-177-21	s	TANTALUM, CHIP 1uF 10% 25V
C12	1-164-156-11	s	CERAMIC 0.1uF 25V
C13	1-164-156-11	s	CERAMIC 0.1uF 25V
C14	1-162-927-11	s	CERAMIC, CHIP 100PF 5% 50V
C16	1-164-156-11	s	CERAMIC 0.1uF 25V
C17	1-162-907-11	s	CERAMIC, CHIP 2PF 50V
C18	1-162-927-11	s	CERAMIC, CHIP 100PF 5% 50V
C19	1-164-156-11	s	CERAMIC 0.1uF 25V
C20	1-162-915-11	s	CERAMIC, CHIP 10PF 5PF 50V
C27	1-162-907-11	s	CERAMIC, CHIP 2PF 50V
C34	1-164-156-11	s	CERAMIC 0.1uF 25V
C35	1-135-177-21	s	TANTALUM, CHIP 1uF 10% 25V
C36	1-162-927-11	s	CERAMIC, CHIP 100PF 5% 50V
C37	1-164-156-11	s	CERAMIC 0.1uF 25V
C38	1-164-156-11	s	CERAMIC 0.1uF 25V
C39	1-164-156-11	s	CERAMIC 0.1uF 25V
C40	1-164-156-11	s	CERAMIC 0.1uF 25V
C41	1-164-156-11	s	CERAMIC 0.1uF 25V
C42	1-162-927-11	s	CERAMIC, CHIP 100PF 5% 50V
C43	1-164-156-11	s	CERAMIC 0.1uF 25V
C44	1-164-156-11	s	CERAMIC 0.1uF 25V
C45	1-164-156-11	s	CERAMIC 0.1uF 25V
C47	1-164-156-11	s	CERAMIC 0.1uF 25V
C48	1-162-927-11	s	CERAMIC, CHIP 100PF 5% 50V
C49	1-164-156-11	s	CERAMIC 0.1uF 25V
C50	1-135-164-21	s	TANTALUM, CHIP 22uF 20% 10V
C51	1-164-156-11	s	CERAMIC 0.1uF 25V
C52	1-162-970-11	s	CERAMIC, CHIP 0.01uF 10% 25V
C53	1-162-927-11	s	CERAMIC, CHIP 100PF 5% 50V
C54	1-135-177-21	s	TANTALUM, CHIP 1uF 10% 25V
C55	1-164-156-11	s	CERAMIC 0.1uF 25V
C56	1-164-156-11	s	CERAMIC 0.1uF 25V
C57	1-164-156-11	s	CERAMIC 0.1uF 25V
C58	1-164-156-11	s	CERAMIC 0.1uF 25V
C59	1-104-823-11	s	TANTALUM, CHIP 47uF 20% 16V
C60	1-104-823-11	s	TANTALUM, CHIP 47uF 20% 16V
C61	1-162-927-11	s	CERAMIC, CHIP 100PF 5% 50V
C62	1-162-927-11	s	CERAMIC, CHIP 100PF 5% 50V
C63	1-164-156-11	s	CERAMIC 0.1uF 25V
C64	1-135-177-21	s	TANTALUM, CHIP 1uF 10% 25V
C65	1-135-177-21	s	TANTALUM, CHIP 1uF 10% 25V
C66	1-164-156-11	s	CERAMIC 0.1uF 25V
C67	1-164-156-11	s	CERAMIC 0.1uF 25V
C69	1-104-851-11	s	TANTALUM, CHIP 10uF 20% 10V
C70	1-104-851-11	s	TANTALUM, CHIP 10uF 20% 10V
C201	1-162-905-11	s	CERAMIC 1PF 0.25PF 50V
C202	1-164-156-11	s	CERAMIC 0.1uF 25V

(PR-200 BOARD)

Ref. No. or Q'ty	Part No.	SP	Description
C203	1-164-156-11	s	CERAMIC 0.1uF 25V
C204	1-162-927-11	s	CERAMIC, CHIP 100PF 5% 50V
C205	1-104-851-11	s	TANTALUM, CHIP 10uF 20% 10V
C206	1-104-851-11	s	TANTALUM, CHIP 10uF 20% 10V
C207	1-164-156-11	s	CERAMIC 0.1uF 25V
C208	1-164-156-11	s	CERAMIC 0.1uF 25V
C209	1-164-156-11	s	CERAMIC 0.1uF 25V
C211	1-135-259-11	s	TANTALUM, CHIP 10uF 20% 6.3
C214	1-135-177-21	s	TANTALUM, CHIP 1uF 10% 25V
C215	1-164-156-11	s	CERAMIC 0.1uF 25V
C216	1-104-852-11	s	TANTALUM, CHIP 22uF 20% 10V
C217	1-104-851-11	s	TANTALUM, CHIP 10uF 20% 10V
C219	1-164-156-11	s	CERAMIC 0.1uF 25V
C220	1-135-177-21	s	TANTALUM, CHIP 1uF 10% 25V
C221	1-164-156-11	s	CERAMIC 0.1uF 25V
C223	1-135-177-21	s	TANTALUM, CHIP 1uF 10% 25V
C224	1-162-905-11	s	CERAMIC 1PF 0.25PF 50V
C225	1-104-851-11	s	TANTALUM, CHIP 10uF 20% 10V
C226	1-164-156-11	s	CERAMIC 0.1uF 25V
C227	1-107-686-11	s	CHIP, TANTALUM 4.7uF 20% 16V
C228	1-162-927-11	s	CERAMIC, CHIP 100PF 5% 50V
C229	1-104-913-11	s	TANTALUM, CHIP 10uF 20% 16V
C230	1-164-156-11	s	CERAMIC 0.1uF 25V
C231	1-104-851-11	s	TANTALUM, CHIP 10uF 20% 10V
C232	1-164-156-11	s	CERAMIC 0.1uF 25V
C233	1-164-156-11	s	CERAMIC 0.1uF 25V
C234	1-104-851-11	s	TANTALUM, CHIP 10uF 20% 10V
C235	1-164-156-11	s	CERAMIC 0.1uF 25V
C236	1-164-156-11	s	CERAMIC 0.1uF 25V
C238	1-164-156-11	s	CERAMIC 0.1uF 25V
C241	1-104-852-11	s	TANTALUM, CHIP 22uF 20% 10V
C242	1-135-177-21	s	TANTALUM, CHIP 1uF 10% 25V
C243	1-164-156-11	s	CERAMIC 0.1uF 25V
C244	1-164-156-11	s	CERAMIC 0.1uF 25V
C245	1-164-156-11	s	CERAMIC 0.1uF 25V
C247	1-135-177-21	s	TANTALUM, CHIP 1uF 10% 25V
C248	1-164-156-11	s	CERAMIC 0.1uF 25V
C249	1-164-156-11	s	CERAMIC 0.1uF 25V
C250	1-162-907-11	s	CERAMIC, CHIP 2PF 50V
C251	1-162-927-11	s	CERAMIC, CHIP 100PF 5% 50V
C252	1-104-851-11	s	TANTALUM, CHIP 10uF 20% 10V
C253	1-104-851-11	s	TANTALUM, CHIP 10uF 20% 10V
C254	1-164-156-11	s	CERAMIC 0.1uF 25V
C255	1-164-156-11	s	CERAMIC 0.1uF 25V
C256	1-162-927-11	s	CERAMIC, CHIP 100PF 5% 50V
C257	1-104-851-11	s	TANTALUM, CHIP 10uF 20% 10V
C258	1-104-851-11	s	TANTALUM, CHIP 10uF 20% 10V
C259	1-164-156-11	s	CERAMIC 0.1uF 25V
C260	1-164-156-11	s	CERAMIC 0.1uF 25V
C263	1-162-915-11	s	CERAMIC, CHIP 10PF 5PF 50V
C264	1-135-177-21	s	TANTALUM, CHIP 1uF 10% 25V
C300	1-135-177-21	s	TANTALUM, CHIP 1uF 10% 25V
C401	1-162-905-11	s	CERAMIC 1PF 0.25PF 50V
C402	1-164-156-11	s	CERAMIC 0.1uF 25V
C403	1-164-156-11	s	CERAMIC 0.1uF 25V
C404	1-162-927-11	s	CERAMIC, CHIP 100PF 5% 50V
C405	1-104-851-11	s	TANTALUM, CHIP 10uF 20% 10V
C406	1-104-851-11	s	TANTALUM, CHIP 10uF 20% 10V
C407	1-164-156-11	s	CERAMIC 0.1uF 25V

(PR-200 BOARD)

Ref. No. or Q'ty	Part No.	SP	Description
C408	1-164-156-11	s	CERAMIC 0.1uF 25V
C409	1-164-156-11	s	CERAMIC 0.1uF 25V
C411	1-135-259-11	s	TANTALUM, CHIP 10uF 20% 6.3
C414	1-135-177-21	s	TANTALUM, CHIP 1uF 10% 25V
C415	1-164-156-11	s	CERAMIC 0.1uF 25V
C416	1-104-852-11	s	TANTALUM, CHIP 22uF 20% 10V
C417	1-104-851-11	s	TANTALUM, CHIP 10uF 20% 10V
C419	1-164-156-11	s	CERAMIC 0.1uF 25V
C420	1-135-177-21	s	TANTALUM, CHIP 1uF 10% 25V
C421	1-164-156-11	s	CERAMIC 0.1uF 25V
C423	1-135-177-21	s	TANTALUM, CHIP 1uF 10% 25V
C424	1-162-905-11	s	CERAMIC 1PF 0.25PF 50V
C425	1-104-851-11	s	TANTALUM, CHIP 10uF 20% 10V
C426	1-164-156-11	s	CERAMIC 0.1uF 25V
C427	1-107-686-11	s	CHIP, TANTALUM 4.7uF 20% 16V
C428	1-162-927-11	s	CERAMIC, CHIP 100PF 5% 50V
C429	1-164-156-11	s	CERAMIC 0.1uF 25V
C430	1-104-913-11	s	TANTALUM, CHIP 10uF 20% 16V
C431	1-104-851-11	s	TANTALUM, CHIP 10uF 20% 10V
C432	1-164-156-11	s	CERAMIC 0.1uF 25V
C433	1-164-156-11	s	CERAMIC 0.1uF 25V
C434	1-104-851-11	s	TANTALUM, CHIP 10uF 20% 10V
C435	1-164-156-11	s	CERAMIC 0.1uF 25V
C436	1-107-686-11	s	CHIP, TANTALUM 4.7uF 20% 16V
C437	1-135-259-11	s	TANTALUM, CHIP 10uF 20% 6.3
C438	1-164-156-11	s	CERAMIC 0.1uF 25V
C439	1-164-156-11	s	CERAMIC 0.1uF 25V
C441	1-164-156-11	s	CERAMIC 0.1uF 25V
C444	1-104-852-11	s	TANTALUM, CHIP 22uF 20% 10V
C445	1-135-177-21	s	TANTALUM, CHIP 1uF 10% 25V
C446	1-164-156-11	s	CERAMIC 0.1uF 25V
C447	1-164-156-11	s	CERAMIC 0.1uF 25V
C448	1-164-156-11	s	CERAMIC 0.1uF 25V
C450	1-135-177-21	s	TANTALUM, CHIP 1uF 10% 25V
C451	1-164-156-11	s	CERAMIC 0.1uF 25V
C452	1-164-156-11	s	CERAMIC 0.1uF 25V
C453	1-162-907-11	s	CERAMIC, CHIP 2PF 50V
C454	1-162-927-11	s	CERAMIC, CHIP 100PF 5% 50V
C455	1-104-851-11	s	TANTALUM, CHIP 10uF 20% 10V
C456	1-104-851-11	s	TANTALUM, CHIP 10uF 20% 10V
C457	1-164-156-11	s	CERAMIC 0.1uF 25V
C458	1-164-156-11	s	CERAMIC 0.1uF 25V
C459	1-162-927-11	s	CERAMIC, CHIP 100PF 5% 50V
C460	1-104-851-11	s	TANTALUM, CHIP 10uF 20% 10V
C461	1-104-851-11	s	TANTALUM, CHIP 10uF 20% 10V
C462	1-164-156-11	s	CERAMIC 0.1uF 25V
C463	1-164-156-11	s	CERAMIC 0.1uF 25V
C464	1-135-177-21	s	TANTALUM, CHIP 1uF 10% 25V
C465	1-135-177-21	s	TANTALUM, CHIP 1uF 10% 25V
C466	1-162-915-11	s	CERAMIC, CHIP 10PF 5PF 50V
C500	1-135-177-21	s	TANTALUM, CHIP 1uF 10% 25V
C601	1-162-905-11	s	CERAMIC 1PF 0.25PF 50V
C602	1-164-156-11	s	CERAMIC 0.1uF 25V
C603	1-164-156-11	s	CERAMIC 0.1uF 25V
C604	1-162-927-11	s	CERAMIC, CHIP 100PF 5% 50V
C605	1-104-851-11	s	TANTALUM, CHIP 10uF 20% 10V
C606	1-104-851-11	s	TANTALUM, CHIP 10uF 20% 10V
C607	1-164-156-11	s	CERAMIC 0.1uF 25V
C608	1-164-156-11	s	CERAMIC 0.1uF 25V

(PR-200 BOARD)

Ref. No. or Q'ty	Part No.	SP	Description
C609	1-164-156-11	s	CERAMIC 0.1uF 25V
C611	1-135-259-11	s	TANTALUM, CHIP 10uF 20% 6.3
C614	1-135-177-21	s	TANTALUM, CHIP 1uF 10% 25V
C615	1-164-156-11	s	CERAMIC 0.1uF 25V
C616	1-104-852-11	s	TANTALUM, CHIP 22uF 20% 10V
C617	1-104-851-11	s	TANTALUM, CHIP 10uF 20% 10V
C619	1-164-156-11	s	CERAMIC 0.1uF 25V
C620	1-135-177-21	s	TANTALUM, CHIP 1uF 10% 25V
C621	1-164-156-11	s	CERAMIC 0.1uF 25V
C623	1-135-177-21	s	TANTALUM, CHIP 1uF 10% 25V
C624	1-162-905-11	s	CERAMIC 1PF 0.25PF 50V
C625	1-104-851-11	s	TANTALUM, CHIP 10uF 20% 10V
C626	1-164-156-11	s	CERAMIC 0.1uF 25V
C627	1-107-686-11	s	CHIP, TANTALUM 4.7uF 20% 16V
C628	1-162-927-11	s	CERAMIC, CHIP 100PF 5% 50V
C629	1-104-913-11	s	TANTALUM, CHIP 10uF 20% 16V
C630	1-164-156-11	s	CERAMIC 0.1uF 25V
C631	1-104-851-11	s	TANTALUM, CHIP 10uF 20% 10V
C632	1-164-156-11	s	CERAMIC 0.1uF 25V
C633	1-164-156-11	s	CERAMIC 0.1uF 25V
C634	1-104-851-11	s	TANTALUM, CHIP 10uF 20% 10V
C635	1-164-156-11	s	CERAMIC 0.1uF 25V
C636	1-164-156-11	s	CERAMIC 0.1uF 25V
C638	1-164-156-11	s	CERAMIC 0.1uF 25V
C641	1-104-852-11	s	TANTALUM, CHIP 22uF 20% 10V
C642	1-135-177-21	s	TANTALUM, CHIP 1uF 10% 25V
C643	1-164-156-11	s	CERAMIC 0.1uF 25V
C644	1-164-156-11	s	CERAMIC 0.1uF 25V
C645	1-164-156-11	s	CERAMIC 0.1uF 25V
C647	1-135-177-21	s	TANTALUM, CHIP 1uF 10% 25V
C648	1-164-156-11	s	CERAMIC 0.1uF 25V
C649	1-164-156-11	s	CERAMIC 0.1uF 25V
C650	1-162-907-11	s	CERAMIC, CHIP 2PF 50V
C651	1-162-927-11	s	CERAMIC, CHIP 100PF 5% 50V
C652	1-104-851-11	s	TANTALUM, CHIP 10uF 20% 10V
C653	1-104-851-11	s	TANTALUM, CHIP 10uF 20% 10V
C654	1-164-156-11	s	CERAMIC 0.1uF 25V
C655	1-164-156-11	s	CERAMIC 0.1uF 25V
C656	1-162-927-11	s	CERAMIC, CHIP 100PF 5% 50V
C657	1-104-851-11	s	TANTALUM, CHIP 10uF 20% 10V
C658	1-104-851-11	s	TANTALUM, CHIP 10uF 20% 10V
C659	1-164-156-11	s	CERAMIC 0.1uF 25V
C660	1-164-156-11	s	CERAMIC 0.1uF 25V
C663	1-162-915-11	s	CERAMIC, CHIP 10PF 5PF 50V
C664	1-135-177-21	s	TANTALUM, CHIP 1uF 10% 25V
C700	1-135-177-21	s	TANTALUM, CHIP 1uF 10% 25V
CN1	1-695-453-11	s	CONNECTOR, BOARD TO BOARD 50P
D1	8-719-059-52	s	DIODE MA3J14300LSO
D201	8-719-059-52	s	DIODE MA3J14300LSO
D202	8-719-820-05	s	DIODE 1SS181
D203	8-719-059-52	s	DIODE MA3J14300LSO
D204	8-719-059-52	s	DIODE MA3J14300LSO
D401	8-719-059-52	s	DIODE MA3J14300LSO
D402	8-719-820-05	s	DIODE 1SS181
D403	8-719-059-52	s	DIODE MA3J14300LSO
D404	8-719-059-52	s	DIODE MA3J14300LSO
D601	8-719-059-52	s	DIODE MA3J14300LSO

http://getMANUAL.com

(PR-200 BOARD)

Ref. No. or Q'ty	Part No.	SP	Description
D602	8-719-820-05	s	DIODE 1SS181
D603	8-719-059-52	s	DIODE MA3J14300LSO
D604	8-719-059-52	s	DIODE MA3J14300LSO
DL201	1-406-743-11	s	DELAY LINE 27.0nS
DL401	1-406-743-11	s	DELAY LINE 27.0nS
DL601	1-406-743-11	s	DELAY LINE 27.0nS
IC1	8-759-058-62	s	IC TC7S08FU(TE85R)
IC2	8-759-054-61	s	IC CLC505AJE
IC4	8-759-271-18	s	IC NJM1496V
IC5	8-759-054-61	s	IC CLC505AJE
IC11	8-759-173-16	s	IC TL062CPW
IC12	8-759-054-61	s	IC CLC505AJE
IC13	8-759-054-61	s	IC CLC505AJE
IC14	8-759-082-60	s	IC TC7S66FU
IC15	8-759-349-47	s	IC TLC393CPW-E05
IC16	8-759-086-41	s	IC X24C02S-3.0
IC17	8-759-059-50	s	IC MB88351PFV
IC18	8-759-059-50	s	IC MB88351PFV
IC19	8-759-059-50	s	IC MB88351PFV
IC20	8-759-064-36	s	IC MB88346BPFV
IC21	8-759-147-84	s	IC CXD8072Q
IC22	8-759-058-55	s	IC TC7S02FU-TE85L
IC23	8-759-076-06	s	IC TL064CPW
IC24	8-759-185-42	s	IC LM4040AIM3-2.5
IC25	8-759-058-62	s	IC TC7S08FU(TE85R)
IC26	8-759-058-62	s	IC TC7S08FU(TE85R)
IC27	8-759-058-62	s	IC TC7S08FU(TE85R)
IC28	8-759-058-62	s	IC TC7S08FU(TE85R)
IC29	8-759-054-61	s	IC CLC505AJE
IC201	8-759-054-61	s	IC CLC505AJE
IC202	8-759-066-59	s	IC TC74HC4053AFS
IC203	8-759-173-16	s	IC TL062CPW
IC204	8-759-357-89	s	IC TLE2426CPS
IC205	8-759-030-49	s	IC MC1495M
IC207	8-759-030-49	s	IC MC1495M
IC208	8-759-054-61	s	IC CLC505AJE
IC209	8-759-066-59	s	IC TC74HC4053AFS
IC210	8-759-173-16	s	IC TL062CPW
IC211	8-759-030-49	s	IC MC1495M
IC212	8-759-173-16	s	IC TL062CPW
IC213	8-759-054-61	s	IC CLC505AJE
IC215	8-759-054-61	s	IC CLC505AJE
IC401	8-759-054-61	s	IC CLC505AJE
IC402	8-759-066-59	s	IC TC74HC4053AFS
IC403	8-759-173-16	s	IC TL062CPW
IC404	8-759-357-89	s	IC TLE2426CPS
IC405	8-759-030-49	s	IC MC1495M
IC407	8-759-030-49	s	IC MC1495M
IC408	8-759-054-61	s	IC CLC505AJE
IC409	8-759-066-59	s	IC TC74HC4053AFS
IC410	8-759-173-16	s	IC TL062CPW
IC411	8-759-173-16	s	IC TL062CPW
IC412	8-759-357-89	s	IC TLE2426CPS
IC413	8-759-030-49	s	IC MC1495M
IC414	8-759-173-16	s	IC TL062CPW
IC415	8-759-054-61	s	IC CLC505AJE
IC417	8-759-054-61	s	IC CLC505AJE
IC601	8-759-054-61	s	IC CLC505AJE

(PR-200 BOARD)

Ref. No. or Q'ty	Part No.	SP	Description
IC602	8-759-066-59	s	IC TC74HC4053AFS
IC603	8-759-173-16	s	IC TL062CPW
IC604	8-759-357-89	s	IC TLE2426CPS
IC605	8-759-030-49	s	IC MC1495M
IC607	8-759-030-49	s	IC MC1495M
IC608	8-759-054-61	s	IC CLC505AJE
IC609	8-759-066-59	s	IC TC74HC4053AFS
IC610	8-759-173-16	s	IC TL062CPW
IC611	8-759-030-49	s	IC MC1495M
IC612	8-759-173-16	s	IC TL062CPW
IC613	8-759-054-61	s	IC CLC505AJE
IC615	8-759-054-61	s	IC CLC505AJE
Q1	8-729-143-07	s	TRANSISTOR 2SA1610-Y33
Q2	8-729-143-07	s	TRANSISTOR 2SA1610-Y33
Q3	8-729-143-07	s	TRANSISTOR 2SA1610-Y33
Q4	8-729-928-36	s	TRANSISTOR DTA114EE
Q5	8-729-928-90	s	TRANSISTOR DTC114EE
Q11	8-729-143-13	s	TRANSISTOR 2SC4176-B34
Q12	8-729-143-13	s	TRANSISTOR 2SC4176-B34
Q13	8-729-143-13	s	TRANSISTOR 2SC4176-B34
Q14	8-729-143-13	s	TRANSISTOR 2SC4176-B34
Q15	8-729-143-07	s	TRANSISTOR 2SA1610-Y33
Q16	8-729-143-07	s	TRANSISTOR 2SA1610-Y33
Q17	8-729-143-13	s	TRANSISTOR 2SC4176-B34
Q18	8-729-143-13	s	TRANSISTOR 2SC4176-B34
Q19	8-729-143-13	s	TRANSISTOR 2SC4176-B34
Q20	8-729-143-13	s	TRANSISTOR 2SC4176-B34
Q21	8-729-928-36	s	TRANSISTOR DTA114EE
Q22	8-729-143-13	s	TRANSISTOR 2SC4176-B34
Q23	8-729-143-13	s	TRANSISTOR 2SC4176-B34
Q24	8-729-143-07	s	TRANSISTOR 2SA1610-Y33
Q25	8-729-143-07	s	TRANSISTOR 2SA1610-Y33
Q26	8-729-143-13	s	TRANSISTOR 2SC4176-B34
Q27	8-729-143-07	s	TRANSISTOR 2SA1610-Y33
Q28	8-729-143-07	s	TRANSISTOR 2SA1610-Y33
Q29	8-729-143-07	s	TRANSISTOR 2SA1610-Y33
Q30	8-729-143-13	s	TRANSISTOR 2SC4176-B34
Q31	8-729-820-86	s	TRANSISTOR 2SB1121-ST
Q32	8-729-143-13	s	TRANSISTOR 2SC4176-B34
Q33	8-729-820-86	s	TRANSISTOR 2SB1121-ST
Q34	8-729-820-90	s	TRANSISTOR 2SD1621-ST
Q35	8-729-143-13	s	TRANSISTOR 2SC4176-B34
Q36	8-729-143-07	s	TRANSISTOR 2SA1610-Y33
Q37	8-729-928-90	s	TRANSISTOR DTC114EE
Q201	8-729-143-07	s	TRANSISTOR 2SA1610-Y33
Q202	8-729-143-07	s	TRANSISTOR 2SA1610-Y33
Q203	8-729-143-07	s	TRANSISTOR 2SA1610-Y33
Q204	8-729-143-07	s	TRANSISTOR 2SA1610-Y33
Q205	8-729-143-07	s	TRANSISTOR 2SA1610-Y33
Q206	8-729-143-07	s	TRANSISTOR 2SA1610-Y33
Q207	8-729-143-07	s	TRANSISTOR 2SA1610-Y33
Q208	8-729-143-07	s	TRANSISTOR 2SA1610-Y33
Q209	8-729-143-13	s	TRANSISTOR 2SC4176-B34
Q210	8-729-143-07	s	TRANSISTOR 2SA1610-Y33
Q211	8-729-143-07	s	TRANSISTOR 2SA1610-Y33
Q212	8-729-928-36	s	TRANSISTOR DTA114EE
Q213	8-729-143-13	s	TRANSISTOR 2SC4176-B34
Q401	8-729-143-07	s	TRANSISTOR 2SA1610-Y33

(PR-200 BOARD)

Ref. No. or Q'ty	Part No.	SP	Description
Q402	8-729-143-07	s	TRANSISTOR 2SA1610-Y33
Q403	8-729-143-07	s	TRANSISTOR 2SA1610-Y33
Q404	8-729-928-90	s	TRANSISTOR DTC114EE
Q405	8-729-928-36	s	TRANSISTOR DTA114EE
Q406	8-729-143-07	s	TRANSISTOR 2SA1610-Y33
Q407	8-729-143-07	s	TRANSISTOR 2SA1610-Y33
Q408	8-729-143-07	s	TRANSISTOR 2SA1610-Y33
Q409	8-729-143-07	s	TRANSISTOR 2SA1610-Y33
Q410	8-729-928-36	s	TRANSISTOR DTA114EE
Q411	8-729-928-90	s	TRANSISTOR DTC114EE
Q412	8-729-143-07	s	TRANSISTOR 2SA1610-Y33
Q413	8-729-143-13	s	TRANSISTOR 2SC4176-B34
Q414	8-729-143-07	s	TRANSISTOR 2SA1610-Y33
Q415	8-729-143-07	s	TRANSISTOR 2SA1610-Y33
Q416	8-729-928-36	s	TRANSISTOR DTA114EE
Q417	8-729-143-13	s	TRANSISTOR 2SC4176-B34
Q601	8-729-143-07	s	TRANSISTOR 2SA1610-Y33
Q602	8-729-143-07	s	TRANSISTOR 2SA1610-Y33
Q603	8-729-143-07	s	TRANSISTOR 2SA1610-Y33
Q604	8-729-143-07	s	TRANSISTOR 2SA1610-Y33
Q605	8-729-143-07	s	TRANSISTOR 2SA1610-Y33
Q606	8-729-143-07	s	TRANSISTOR 2SA1610-Y33
Q607	8-729-143-07	s	TRANSISTOR 2SA1610-Y33
Q608	8-729-143-07	s	TRANSISTOR 2SA1610-Y33
Q609	8-729-143-13	s	TRANSISTOR 2SC4176-B34
Q610	8-729-143-07	s	TRANSISTOR 2SA1610-Y33
Q611	8-729-143-07	s	TRANSISTOR 2SA1610-Y33
Q612	8-729-928-36	s	TRANSISTOR DTA114EE
Q613	8-729-143-13	s	TRANSISTOR 2SC4176-B34
R1	1-218-644-11	s	METAL 10 0.50% 1/16W
R2	1-218-707-11	s	CHIP, METAL 4.3K 0.50% 1/16W
R3	1-218-694-11	s	CHIP, METAL 1.2K 0.50% 1/16W
R4	1-218-717-11	s	CHIP, METAL 11K 0.50% 1/16W
R5	1-218-692-11	s	CHIP, METAL 1K 0.50% 1/16W
R6	1-218-682-11	s	METAL 390 0.50% 1/16W
R7	1-218-675-11	s	CHIP, METAL 200 0.50% 1/16W
R8	1-218-684-11	s	CHIP, METAL 470 0.50% 1/16W
R9	1-218-654-11	s	CHIP, METAL 27 0.50% 1/16W
R10	1-218-654-11	s	CHIP, METAL 27 0.50% 1/16W
R11	1-218-653-11	s	METAL 24 0.50% 1/16W
R12	1-218-692-11	s	CHIP, METAL 1K 0.50% 1/16W
R13	1-218-745-11	s	CHIP, METAL 160K 0.50% 1/16W
R14	1-218-652-11	s	CHIP, METAL 22 0.50% 1/16W
R15	1-218-708-11	s	METAL 4.7K 0.50% 1/16W
R16	1-218-708-11	s	METAL 4.7K 0.50% 1/16W
R17	1-218-652-11	s	CHIP, METAL 22 0.50% 1/16W
R18	1-218-652-11	s	CHIP, METAL 22 0.50% 1/16W
R19	1-218-730-11	s	CHIP, METAL 39K 0.50% 1/16W
R20	1-218-720-11	s	METAL 15K 0.50% 1/16W
R21	1-218-728-11	s	METAL 33K 0.50% 1/16W
R22	1-218-710-11	s	CHIP, METAL 5.6K 0.50% 1/16W
R23	1-218-692-11	s	CHIP, METAL 1K 0.50% 1/16W
R24	1-218-668-11	s	CHIP, METAL 100 0.50% 1/16W
R25	1-218-668-11	s	CHIP, METAL 100 0.50% 1/16W
R26	1-218-690-11	s	CHIP, METAL 820 0.50% 1/16W
R27	1-218-692-11	s	CHIP, METAL 1K 0.50% 1/16W
R28	1-218-736-11	s	METAL 68K 0.50% 1/16W
R29	1-218-698-11	s	METAL 1.8K 0.50% 1/16W
R30	1-218-749-11	s	CHIP, METAL 240K 0.50% 1/16W

(PR-200 BOARD)

Ref. No. or Q'ty	Part No.	SP	Description
R31	1-218-692-11	s	CHIP, METAL 1K 0.50% 1/16W
R32	1-218-740-11	s	METAL 100K 0.50% 1/16W
R33	1-218-694-11	s	CHIP, METAL 1.2K 0.50% 1/16W
R34	1-218-722-11	s	CHIP, METAL 18K 0.50% 1/16W
R35	1-218-727-11	s	METAL 30K 0.50% 1/16W
R36	1-218-706-11	s	METAL 3.9K 0.50% 1/16W
R37	1-218-749-11	s	CHIP, METAL 240K 0.50% 1/16W
R38	1-218-692-11	s	CHIP, METAL 1K 0.50% 1/16W
R39	1-218-692-11	s	CHIP, METAL 1K 0.50% 1/16W
R71	1-218-668-11	s	CHIP, METAL 100 0.50% 1/16W
R72	1-218-668-11	s	CHIP, METAL 100 0.50% 1/16W
R73	1-218-668-11	s	CHIP, METAL 100 0.50% 1/16W
R74	1-218-716-11	s	METAL 10K 0.50% 1/16W
R75	1-218-730-11	s	CHIP, METAL 39K 0.50% 1/16W
R76	1-218-712-11	s	CHIP, METAL 6.8K 0.50% 1/16W
R77	1-218-716-11	s	METAL 10K 0.50% 1/16W
R78	1-218-716-11	s	METAL 10K 0.50% 1/16W
R79	1-218-700-11	s	METAL 2.2K 0.50% 1/16W
R80	1-216-857-11	s	METAL, CHIP 1M 5% 1/16W
R81	1-218-716-11	s	METAL 10K 0.50% 1/16W
R82	1-218-716-11	s	METAL 10K 0.50% 1/16W
R83	1-218-716-11	s	METAL 10K 0.50% 1/16W
R84	1-218-716-11	s	METAL 10K 0.50% 1/16W
R85	1-218-668-11	s	CHIP, METAL 100 0.50% 1/16W
R86	1-218-716-11	s	METAL 10K 0.50% 1/16W
R87	1-218-668-11	s	CHIP, METAL 100 0.50% 1/16W
R88	1-218-668-11	s	CHIP, METAL 100 0.50% 1/16W
R89	1-218-716-11	s	METAL 10K 0.50% 1/16W
R90	1-218-668-11	s	CHIP, METAL 100 0.50% 1/16W
R91	1-218-730-11	s	CHIP, METAL 39K 0.50% 1/16W
R92	1-218-712-11	s	CHIP, METAL 6.8K 0.50% 1/16W
R93	1-218-712-11	s	CHIP, METAL 6.8K 0.50% 1/16W
R94	1-218-692-11	s	CHIP, METAL 1K 0.50% 1/16W
R95	1-218-692-11	s	CHIP, METAL 1K 0.50% 1/16W
R96	1-218-692-11	s	CHIP, METAL 1K 0.50% 1/16W
R97	1-218-692-11	s	CHIP, METAL 1K 0.50% 1/16W
R98	1-218-745-11	s	CHIP, METAL 160K 0.50% 1/16W
R99	1-218-716-11	s	METAL 10K 0.50% 1/16W
R100	1-218-724-11	s	CHIP, METAL 22K 5% 1/16W
R102	1-218-668-11	s	CHIP, METAL 100 0.50% 1/16W
R103	1-218-708-11	s	METAL 4.7K 0.50% 1/16W
R104	1-218-716-11	s	METAL 10K 0.50% 1/16W
R105	1-218-725-11	s	METAL 24K 0.50% 1/16W
R107	1-218-692-11	s	CHIP, METAL 1K 0.50% 1/16W
R108	1-218-692-11	s	CHIP, METAL 1K 0.50% 1/16W
R109	1-218-680-11	s	METAL 330 0.50% 1/16W
R110	1-218-692-11	s	CHIP, METAL 1K 0.50% 1/16W
R111	1-218-692-11	s	CHIP, METAL 1K 0.50% 1/16W
R112	1-218-745-11	s	CHIP, METAL 160K 0.50% 1/16W
R113	1-218-716-11	s	METAL 10K 0.50% 1/16W
R114	1-218-652-11	s	CHIP, METAL 22 0.50% 1/16W
R116	1-218-716-11	s	METAL 10K 0.50% 1/16W
R117	1-218-716-11	s	METAL 10K 0.50% 1/16W
R118	1-218-675-11	s	CHIP, METAL 200 0.50% 1/16W
R119	1-218-675-11	s	CHIP, METAL 200 0.50% 1/16W
R120	1-218-692-11	s	CHIP, METAL 1K 0.50% 1/16W
R121	1-218-700-11	s	METAL 2.2K 0.50% 1/16W
R122	1-218-700-11	s	METAL 2.2K 0.50% 1/16W
R123	1-218-716-11	s	METAL 10K 0.50% 1/16W

(PR-200 BOARD)

Ref. No. or Q'ty	Part No.	SP	Description
R124	1-218-698-11	s	METAL 1.8K 0.50% 1/16W
R125	1-218-689-11	s	CHIP, METAL 750 0.50% 1/16W
R126	1-218-718-11	s	CHIP, METAL 12K 0.50% 1/16W
R127	1-218-676-11	s	METAL 220 0.50% 1/16W
R128	1-218-708-11	s	METAL 4.7K 0.50% 1/16W
R129	1-218-701-11	s	METAL 2.4K 0.50% 1/16W
R130	1-218-716-11	s	METAL 10K 0.50% 1/16W
R131	1-218-692-11	s	CHIP, METAL 1K 0.50% 1/16W
R132	1-218-675-11	s	CHIP, METAL 200 0.50% 1/16W
R133	1-218-675-11	s	CHIP, METAL 200 0.50% 1/16W
R134	1-218-675-11	s	CHIP, METAL 200 0.50% 1/16W
R135	1-218-675-11	s	CHIP, METAL 200 0.50% 1/16W
R136	1-218-700-11	s	METAL 2.2K 0.50% 1/16W
R137	1-218-700-11	s	METAL 2.2K 0.50% 1/16W
R138	1-218-700-11	s	METAL 2.2K 0.50% 1/16W
R139	1-218-700-11	s	METAL 2.2K 0.50% 1/16W
R140	1-218-692-11	s	CHIP, METAL 1K 0.50% 1/16W
R141	1-218-716-11	s	METAL 10K 0.50% 1/16W
R142	1-218-716-11	s	METAL 10K 0.50% 1/16W
R143	1-218-724-11	s	CHIP, METAL 22K 5% 1/16W
R144	1-218-724-11	s	CHIP, METAL 22K 5% 1/16W
R145	1-218-701-11	s	METAL 2.4K 0.50% 1/16W
R146	1-218-699-11	s	CHIP, METAL 2K 0.50% 1/16W
R147	1-218-692-11	s	CHIP, METAL 1K 0.50% 1/16W
R148	1-218-668-11	s	CHIP, METAL 100 0.50% 1/16W
R149	1-218-668-11	s	CHIP, METAL 100 0.50% 1/16W
R150	1-218-740-11	s	METAL 100K 0.50% 1/16W
R151	1-218-740-11	s	METAL 100K 0.50% 1/16W
R152	1-218-644-11	s	METAL 10 0.50% 1/16W
R153	1-218-728-11	s	METAL 33K 0.50% 1/16W
R154	1-218-692-11	s	CHIP, METAL 1K 0.50% 1/16W
R155	1-218-692-11	s	CHIP, METAL 1K 0.50% 1/16W
R156	1-218-692-11	s	CHIP, METAL 1K 0.50% 1/16W
R157	1-218-740-11	s	METAL 100K 0.50% 1/16W
R158	1-218-740-11	s	METAL 100K 0.50% 1/16W
R159	1-218-740-11	s	METAL 100K 0.50% 1/16W
R201	1-218-664-11	s	CHIP, METAL 68 0.50% 1/16W
R202	1-218-694-11	s	CHIP, METAL 1.2K 0.50% 1/16W
R203	1-218-703-11	s	CHIP, METAL 3K 0.50% 1/16W
R204	1-218-692-11	s	CHIP, METAL 1K 0.50% 1/16W
R205	1-218-710-11	s	CHIP, METAL 5.6K 0.50% 1/16W
R206	1-218-851-11	s	CHIP, METAL 1.5K 0.50% 1/16W
R207	1-218-692-11	s	CHIP, METAL 1K 0.50% 1/16W
R208	1-218-745-11	s	CHIP, METAL 160K 0.50% 1/16W
R209	1-218-660-91	s	CHIP, METAL 47 0.50% 1/16W
R211	1-218-692-11	s	CHIP, METAL 1K 0.50% 1/16W
R212	1-218-668-11	s	CHIP, METAL 100 0.50% 1/16W
R213	1-218-700-11	s	METAL 2.2K 0.50% 1/16W
R214	1-218-668-11	s	CHIP, METAL 100 0.50% 1/16W
R215	1-218-700-11	s	METAL 2.2K 0.50% 1/16W
R216	1-218-668-11	s	CHIP, METAL 100 0.50% 1/16W
R217	1-218-718-11	s	CHIP, METAL 12K 0.50% 1/16W
R218	1-218-732-11	s	METAL 47K 0.50% 1/16W
R219	1-218-697-11	s	METAL 1.6K 0.50% 1/16W
R220	1-218-725-11	s	METAL 24K 0.50% 1/16W
R221	1-218-740-11	s	METAL 100K 0.50% 1/16W
R223	1-218-692-11	s	CHIP, METAL 1K 0.50% 1/16W
R224	1-218-692-11	s	CHIP, METAL 1K 0.50% 1/16W
R225	1-218-668-11	s	CHIP, METAL 100 0.50% 1/16W

(PR-200 BOARD)

Ref. No. or Q'ty	Part No.	SP	Description
R226	1-218-668-11	s	CHIP, METAL 100 0.50% 1/16W
R227	1-218-698-11	s	METAL 1.8K 0.50% 1/16W
R228	1-218-724-11	s	CHIP, METAL 22K 5% 1/16W
R229	1-218-688-11	s	METAL 680 0.50% 1/16W
R230	1-218-713-11	s	CHIP, METAL 7.5K 0.50% 1/16W
R231	1-218-688-11	s	METAL 680 0.50% 1/16W
R233	1-218-720-11	s	METAL 15K 0.50% 1/16W
R234	1-218-720-11	s	METAL 15K 0.50% 1/16W
R236	1-218-727-11	s	METAL 30K 0.50% 1/16W
R237	1-218-692-11	s	CHIP, METAL 1K 0.50% 1/16W
R238	1-218-692-11	s	CHIP, METAL 1K 0.50% 1/16W
R239	1-218-714-11	s	METAL 8.2K 0.50% 1/16W
R240	1-218-668-11	s	CHIP, METAL 100 0.50% 1/16W
R241	1-218-714-11	s	METAL 8.2K 0.50% 1/16W
R242	1-218-732-11	s	METAL 47K 0.50% 1/16W
R243	1-218-682-11	s	METAL 390 0.50% 1/16W
R244	1-218-708-11	s	METAL 4.7K 0.50% 1/16W
R245	1-218-652-11	s	CHIP, METAL 22 0.50% 1/16W
R246	1-218-652-11	s	CHIP, METAL 22 0.50% 1/16W
R247	1-218-678-11	s	CHIP, METAL 270 0.50% 1/16W
R248	1-218-698-11	s	METAL 1.8K 0.50% 1/16W
R249	1-218-713-11	s	CHIP, METAL 7.5K 0.50% 1/16W
R250	1-218-713-11	s	CHIP, METAL 7.5K 0.50% 1/16W
R251	1-218-702-11	s	CHIP, METAL 2.7K 0.50% 1/16W
R253	1-218-720-11	s	METAL 15K 0.50% 1/16W
R254	1-218-720-11	s	METAL 15K 0.50% 1/16W
R256	1-218-727-11	s	METAL 30K 0.50% 1/16W
R257	1-218-723-11	s	METAL 20K 0.50% 1/16W
R258	1-218-727-11	s	METAL 30K 0.50% 1/16W
R259	1-218-704-11	s	METAL 3.3K 0.50% 1/16W
R260	1-218-699-11	s	CHIP, METAL 2K 0.50% 1/16W
R261	1-218-710-11	s	CHIP, METAL 5.6K 0.50% 1/16W
R262	1-218-675-11	s	CHIP, METAL 200 0.50% 1/16W
R263	1-218-749-11	s	CHIP, METAL 240K 0.50% 1/16W
R264	1-218-716-11	s	METAL 10K 0.50% 1/16W
R265	1-218-716-11	s	METAL 10K 0.50% 1/16W
R266	1-218-692-11	s	CHIP, METAL 1K 0.50% 1/16W
R267	1-218-679-91	s	CHIP, METAL 300 0.50% 1/16W
R268	1-218-668-11	s	CHIP, METAL 100 0.50% 1/16W
R269	1-218-724-11	s	CHIP, METAL 22K 5% 1/16W
R270	1-218-708-11	s	METAL 4.7K 0.50% 1/16W
R271	1-218-679-91	s	CHIP, METAL 300 0.50% 1/16W
R272	1-218-690-11	s	CHIP, METAL 820 0.50% 1/16W
R273	1-218-698-11	s	METAL 1.8K 0.50% 1/16W
R274	1-218-656-11	s	CHIP, METAL 33 0.50% 1/16W
R275	1-218-720-11	s	METAL 15K 0.50% 1/16W
R276	1-218-851-11	s	CHIP, METAL 1.5K 0.50% 1/16W
R277	1-218-716-11	s	METAL 10K 0.50% 1/16W
R278	1-218-672-11	s	METAL 150 0.50% 1/16W
R279	1-218-724-11	s	CHIP, METAL 22K 5% 1/16W
R280	1-218-718-11	s	CHIP, METAL 12K 0.50% 1/16W
R281	1-218-680-11	s	METAL 330 0.50% 1/16W
R282	1-218-680-11	s	METAL 330 0.50% 1/16W
R283	1-218-704-11	s	METAL 3.3K 0.50% 1/16W
R284	1-218-701-11	s	METAL 2.4K 0.50% 1/16W
R285	1-218-692-11	s	CHIP, METAL 1K 0.50% 1/16W
R286	1-218-724-11	s	CHIP, METAL 22K 5% 1/16W
R287	1-218-713-11	s	CHIP, METAL 7.5K 0.50% 1/16W
R288	1-218-851-11	s	CHIP, METAL 1.5K 0.50% 1/16W

(PR-200 BOARD)

Ref. No. or Q'ty	Part No.	SP	Description
R289	1-218-668-11	s	CHIP, METAL 100 0.50% 1/16W
R290	1-218-736-11	s	METAL 68K 0.50% 1/16W
R291	1-218-740-11	s	METAL 100K 0.50% 1/16W
R292	1-218-747-11	s	METAL 200K 0.50% 1/16W
R293	1-218-738-11	s	CHIP, METAL 82K 0.50% 1/16W
R295	1-218-727-11	s	METAL 30K 0.50% 1/16W
R296	1-218-723-11	s	METAL 20K 0.50% 1/16W
R297	1-218-692-11	s	CHIP, METAL 1K 0.50% 1/16W
R298	1-218-706-11	s	METAL 3.9K 0.50% 1/16W
R299	1-218-745-11	s	CHIP, METAL 160K 0.50% 1/16W
R300	1-218-668-11	s	CHIP, METAL 100 0.50% 1/16W
R301	1-218-668-11	s	CHIP, METAL 100 0.50% 1/16W
R302	1-218-703-11	s	CHIP, METAL 3K 0.50% 1/16W
R303	1-218-703-11	s	CHIP, METAL 3K 0.50% 1/16W
R304	1-218-703-11	s	CHIP, METAL 3K 0.50% 1/16W
R305	1-218-740-11	s	METAL 100K 0.50% 1/16W
R306	1-218-692-11	s	CHIP, METAL 1K 0.50% 1/16W
R307	1-218-660-91	s	CHIP, METAL 47 0.50% 1/16W
R308	1-218-692-11	s	CHIP, METAL 1K 0.50% 1/16W
R309	1-218-692-11	s	CHIP, METAL 1K 0.50% 1/16W
R310	1-216-864-11	s	METAL, CHIP 0 5% 1/16W
R311	1-218-708-11	s	METAL 4.7K 0.50% 1/16W
R326	1-218-652-11	s	CHIP, METAL 22 0.50% 1/16W
R327	1-218-692-11	s	CHIP, METAL 1K 0.50% 1/16W
R401	1-218-664-11	s	CHIP, METAL 68 0.50% 1/16W
R402	1-218-694-11	s	CHIP, METAL 1.2K 0.50% 1/16W
R403	1-218-703-11	s	CHIP, METAL 3K 0.50% 1/16W
R404	1-218-710-11	s	CHIP, METAL 5.6K 0.50% 1/16W
R405	1-218-692-11	s	CHIP, METAL 1K 0.50% 1/16W
R406	1-218-851-11	s	CHIP, METAL 1.5K 0.50% 1/16W
R407	1-218-692-11	s	CHIP, METAL 1K 0.50% 1/16W
R408	1-218-745-11	s	CHIP, METAL 160K 0.50% 1/16W
R409	1-218-660-91	s	CHIP, METAL 47 0.50% 1/16W
R411	1-218-692-11	s	CHIP, METAL 1K 0.50% 1/16W
R412	1-218-668-11	s	CHIP, METAL 100 0.50% 1/16W
R413	1-218-700-11	s	METAL 2.2K 0.50% 1/16W
R414	1-218-668-11	s	CHIP, METAL 100 0.50% 1/16W
R415	1-218-700-11	s	METAL 2.2K 0.50% 1/16W
R416	1-218-668-11	s	CHIP, METAL 100 0.50% 1/16W
R417	1-218-718-11	s	CHIP, METAL 12K 0.50% 1/16W
R418	1-218-732-11	s	METAL 47K 0.50% 1/16W
R419	1-218-697-11	s	METAL 1.6K 0.50% 1/16W
R420	1-218-725-11	s	METAL 24K 0.50% 1/16W
R421	1-218-740-11	s	METAL 100K 0.50% 1/16W
R423	1-218-692-11	s	CHIP, METAL 1K 0.50% 1/16W
R424	1-218-692-11	s	CHIP, METAL 1K 0.50% 1/16W
R425	1-218-668-11	s	CHIP, METAL 100 0.50% 1/16W
R426	1-218-668-11	s	CHIP, METAL 100 0.50% 1/16W
R427	1-218-698-11	s	METAL 1.8K 0.50% 1/16W
R428	1-218-724-11	s	CHIP, METAL 22K 5% 1/16W
R429	1-218-688-11	s	METAL 680 0.50% 1/16W
R430	1-218-713-11	s	CHIP, METAL 7.5K 0.50% 1/16W
R431	1-218-688-11	s	METAL 680 0.50% 1/16W
R433	1-218-720-11	s	METAL 15K 0.50% 1/16W
R434	1-218-720-11	s	METAL 15K 0.50% 1/16W
R436	1-218-727-11	s	METAL 30K 0.50% 1/16W
R437	1-218-692-11	s	CHIP, METAL 1K 0.50% 1/16W
R438	1-218-692-11	s	CHIP, METAL 1K 0.50% 1/16W
R439	1-218-714-11	s	METAL 8.2K 0.50% 1/16W

(PR-200 BOARD)

Ref. No. or Q'ty	Part No.	SP	Description
R440	1-218-668-11	s	CHIP, METAL 100 0.50% 1/16W
R441	1-218-714-11	s	METAL 8.2K 0.50% 1/16W
R442	1-218-732-11	s	METAL 47K 0.50% 1/16W
R443	1-218-682-11	s	METAL 390 0.50% 1/16W
R444	1-218-708-11	s	METAL 4.7K 0.50% 1/16W
R445	1-218-652-11	s	CHIP, METAL 22 0.50% 1/16W
R446	1-218-652-11	s	CHIP, METAL 22 0.50% 1/16W
R447	1-218-678-11	s	CHIP, METAL 270 0.50% 1/16W
R448	1-218-698-11	s	METAL 1.8K 0.50% 1/16W
R449	1-218-713-11	s	CHIP, METAL 7.5K 0.50% 1/16W
R450	1-218-713-11	s	CHIP, METAL 7.5K 0.50% 1/16W
R451	1-218-702-11	s	CHIP, METAL 2.7K 0.50% 1/16W
R453	1-218-720-11	s	METAL 15K 0.50% 1/16W
R454	1-218-720-11	s	METAL 15K 0.50% 1/16W
R456	1-218-727-11	s	METAL 30K 0.50% 1/16W
R457	1-218-723-11	s	METAL 20K 0.50% 1/16W
R458	1-218-727-11	s	METAL 30K 0.50% 1/16W
R459	1-218-704-11	s	METAL 3.3K 0.50% 1/16W
R460	1-218-699-11	s	CHIP, METAL 2K 0.50% 1/16W
R461	1-218-710-11	s	CHIP, METAL 5.6K 0.50% 1/16W
R462	1-218-675-11	s	CHIP, METAL 200 0.50% 1/16W
R463	1-218-749-11	s	CHIP, METAL 240K 0.50% 1/16W
R464	1-218-716-11	s	METAL 10K 0.50% 1/16W
R465	1-218-716-11	s	METAL 10K 0.50% 1/16W
R466	1-218-692-11	s	CHIP, METAL 1K 0.50% 1/16W
R467	1-218-688-11	s	METAL 680 0.50% 1/16W
R469	1-218-679-91	s	CHIP, METAL 300 0.50% 1/16W
R470	1-218-668-11	s	CHIP, METAL 100 0.50% 1/16W
R471	1-218-679-91	s	CHIP, METAL 300 0.50% 1/16W
R472	1-218-724-11	s	CHIP, METAL 22K 5% 1/16W
R473	1-218-708-11	s	METAL 4.7K 0.50% 1/16W
R474	1-218-690-11	s	CHIP, METAL 820 0.50% 1/16W
R475	1-218-679-91	s	CHIP, METAL 300 0.50% 1/16W
R476	1-218-698-11	s	METAL 1.8K 0.50% 1/16W
R477	1-218-656-11	s	CHIP, METAL 33 0.50% 1/16W
R478	1-218-720-11	s	METAL 15K 0.50% 1/16W
R479	1-218-851-11	s	CHIP, METAL 1.5K 0.50% 1/16W
R480	1-218-716-11	s	METAL 10K 0.50% 1/16W
R481	1-218-672-11	s	METAL 150 0.50% 1/16W
R482	1-218-724-11	s	CHIP, METAL 22K 5% 1/16W
R483	1-218-718-11	s	CHIP, METAL 12K 0.50% 1/16W
R484	1-218-680-11	s	METAL 330 0.50% 1/16W
R485	1-218-680-11	s	METAL 330 0.50% 1/16W
R486	1-218-704-11	s	METAL 3.3K 0.50% 1/16W
R487	1-218-701-11	s	METAL 2.4K 0.50% 1/16W
R488	1-218-692-11	s	CHIP, METAL 1K 0.50% 1/16W
R489	1-218-724-11	s	CHIP, METAL 22K 5% 1/16W
R490	1-218-713-11	s	CHIP, METAL 7.5K 0.50% 1/16W
R491	1-218-851-11	s	CHIP, METAL 1.5K 0.50% 1/16W
R492	1-218-668-11	s	CHIP, METAL 100 0.50% 1/16W
R493	1-218-736-11	s	METAL 68K 0.50% 1/16W
R494	1-218-740-11	s	METAL 100K 0.50% 1/16W
R495	1-218-747-11	s	METAL 200K 0.50% 1/16W
R496	1-218-738-11	s	CHIP, METAL 82K 0.50% 1/16W
R498	1-218-727-11	s	METAL 30K 0.50% 1/16W
R499	1-218-723-11	s	METAL 20K 0.50% 1/16W
R500	1-218-692-11	s	CHIP, METAL 1K 0.50% 1/16W
R501	1-218-706-11	s	METAL 3.9K 0.50% 1/16W
R502	1-218-745-11	s	CHIP, METAL 160K 0.50% 1/16W

(PR-200 BOARD)

Ref. No. or Q'ty	Part No.	SP	Description
R503	1-218-668-11	s	CHIP, METAL 100 0.50% 1/16W
R504	1-218-668-11	s	CHIP, METAL 100 0.50% 1/16W
R505	1-218-703-11	s	CHIP, METAL 3K 0.50% 1/16W
R506	1-218-703-11	s	CHIP, METAL 3K 0.50% 1/16W
R507	1-218-703-11	s	CHIP, METAL 3K 0.50% 1/16W
R508	1-218-740-11	s	METAL 100K 0.50% 1/16W
R509	1-218-692-11	s	CHIP, METAL 1K 0.50% 1/16W
R510	1-218-660-91	s	CHIP, METAL 47 0.50% 1/16W
R511	1-218-692-11	s	CHIP, METAL 1K 0.50% 1/16W
R512	1-218-692-11	s	CHIP, METAL 1K 0.50% 1/16W
R513	1-216-864-11	s	METAL, CHIP 0 5% 1/16W
R514	1-218-708-11	s	METAL 4.7K 0.50% 1/16W
R529	1-218-652-11	s	CHIP, METAL 22 0.50% 1/16W
R530	1-218-692-11	s	CHIP, METAL 1K 0.50% 1/16W
R601	1-218-664-11	s	CHIP, METAL 68 0.50% 1/16W
R602	1-218-694-11	s	CHIP, METAL 1.2K 0.50% 1/16W
R603	1-218-703-11	s	CHIP, METAL 3K 0.50% 1/16W
R604	1-218-710-11	s	CHIP, METAL 5.6K 0.50% 1/16W
R605	1-218-692-11	s	CHIP, METAL 1K 0.50% 1/16W
R606	1-218-851-11	s	CHIP, METAL 1.5K 0.50% 1/16W
R607	1-218-692-11	s	CHIP, METAL 1K 0.50% 1/16W
R608	1-218-745-11	s	CHIP, METAL 160K 0.50% 1/16W
R609	1-218-660-91	s	CHIP, METAL 47 0.50% 1/16W
R611	1-218-692-11	s	CHIP, METAL 1K 0.50% 1/16W
R612	1-218-668-11	s	CHIP, METAL 100 0.50% 1/16W
R613	1-218-700-11	s	METAL 2.2K 0.50% 1/16W
R614	1-218-668-11	s	CHIP, METAL 100 0.50% 1/16W
R615	1-218-700-11	s	METAL 2.2K 0.50% 1/16W
R616	1-218-668-11	s	CHIP, METAL 100 0.50% 1/16W
R617	1-218-718-11	s	CHIP, METAL 12K 0.50% 1/16W
R618	1-218-732-11	s	METAL 47K 0.50% 1/16W
R619	1-218-697-11	s	METAL 1.6K 0.50% 1/16W
R620	1-218-725-11	s	METAL 24K 0.50% 1/16W
R621	1-218-740-11	s	METAL 100K 0.50% 1/16W
R623	1-218-692-11	s	CHIP, METAL 1K 0.50% 1/16W
R624	1-218-692-11	s	CHIP, METAL 1K 0.50% 1/16W
R625	1-218-668-11	s	CHIP, METAL 100 0.50% 1/16W
R626	1-218-668-11	s	CHIP, METAL 100 0.50% 1/16W
R627	1-218-698-11	s	METAL 1.8K 0.50% 1/16W
R628	1-218-724-11	s	CHIP, METAL 22K 5% 1/16W
R629	1-218-688-11	s	METAL 680 0.50% 1/16W
R630	1-218-713-11	s	CHIP, METAL 7.5K 0.50% 1/16W
R631	1-218-688-11	s	METAL 680 0.50% 1/16W
R633	1-218-720-11	s	METAL 15K 0.50% 1/16W
R634	1-218-720-11	s	METAL 15K 0.50% 1/16W
R635	1-218-727-11	s	METAL 30K 0.50% 1/16W
R637	1-218-692-11	s	CHIP, METAL 1K 0.50% 1/16W
R638	1-218-692-11	s	CHIP, METAL 1K 0.50% 1/16W
R639	1-218-714-11	s	METAL 8.2K 0.50% 1/16W
R640	1-218-668-11	s	CHIP, METAL 100 0.50% 1/16W
R641	1-218-714-11	s	METAL 8.2K 0.50% 1/16W
R642	1-218-732-11	s	METAL 47K 0.50% 1/16W
R643	1-218-682-11	s	METAL 390 0.50% 1/16W
R644	1-218-708-11	s	METAL 4.7K 0.50% 1/16W
R645	1-218-652-11	s	CHIP, METAL 22 0.50% 1/16W
R646	1-218-652-11	s	CHIP, METAL 22 0.50% 1/16W
R647	1-218-678-11	s	CHIP, METAL 270 0.50% 1/16W
R648	1-218-698-11	s	METAL 1.8K 0.50% 1/16W
R649	1-218-713-11	s	CHIP, METAL 7.5K 0.50% 1/16W

(PR-200 BOARD)

Ref. No. or Q'ty	Part No.	SP	Description
R650	1-218-713-11	s	CHIP, METAL 7.5K 0.50% 1/16W
R651	1-218-702-11	s	CHIP, METAL 2.7K 0.50% 1/16W
R653	1-218-720-11	s	METAL 15K 0.50% 1/16W
R654	1-218-720-11	s	METAL 15K 0.50% 1/16W
R655	1-218-727-11	s	METAL 30K 0.50% 1/16W
R657	1-218-723-11	s	METAL 20K 0.50% 1/16W
R658	1-218-727-11	s	METAL 30K 0.50% 1/16W
R659	1-218-704-11	s	METAL 3.3K 0.50% 1/16W
R660	1-218-699-11	s	CHIP, METAL 2K 0.50% 1/16W
R661	1-218-710-11	s	CHIP, METAL 5.6K 0.50% 1/16W
R662	1-218-675-11	s	CHIP, METAL 200 0.50% 1/16W
R663	1-218-749-11	s	CHIP, METAL 240K 0.50% 1/16W
R664	1-218-716-11	s	METAL 10K 0.50% 1/16W
R665	1-218-716-11	s	METAL 10K 0.50% 1/16W
R666	1-218-692-11	s	CHIP, METAL 1K 0.50% 1/16W
R667	1-218-679-91	s	CHIP, METAL 300 0.50% 1/16W
R668	1-218-668-11	s	CHIP, METAL 100 0.50% 1/16W
R669	1-218-724-11	s	CHIP, METAL 22K 5% 1/16W
R670	1-218-708-11	s	METAL 4.7K 0.50% 1/16W
R671	1-218-679-91	s	CHIP, METAL 300 0.50% 1/16W
R672	1-218-690-11	s	CHIP, METAL 820 0.50% 1/16W
R673	1-218-698-11	s	METAL 1.8K 0.50% 1/16W
R674	1-218-656-11	s	CHIP, METAL 33 0.50% 1/16W
R675	1-218-720-11	s	METAL 15K 0.50% 1/16W
R676	1-218-851-11	s	CHIP, METAL 1.5K 0.50% 1/16W
R677	1-218-716-11	s	METAL 10K 0.50% 1/16W
R678	1-218-672-11	s	METAL 150 0.50% 1/16W
R679	1-218-724-11	s	CHIP, METAL 22K 5% 1/16W
R680	1-218-718-11	s	CHIP, METAL 12K 0.50% 1/16W
R681	1-218-680-11	s	METAL 330 0.50% 1/16W
R682	1-218-680-11	s	METAL 330 0.50% 1/16W
R683	1-218-704-11	s	METAL 3.3K 0.50% 1/16W
R684	1-218-701-11	s	METAL 2.4K 0.50% 1/16W
R685	1-218-692-11	s	CHIP, METAL 1K 0.50% 1/16W
R686	1-218-724-11	s	CHIP, METAL 22K 5% 1/16W
R687	1-218-713-11	s	CHIP, METAL 7.5K 0.50% 1/16W
R688	1-218-851-11	s	CHIP, METAL 1.5K 0.50% 1/16W
R689	1-218-668-11	s	CHIP, METAL 100 0.50% 1/16W
R690	1-218-736-11	s	METAL 68K 0.50% 1/16W
R691	1-218-740-11	s	METAL 100K 0.50% 1/16W
R692	1-218-747-11	s	METAL 200K 0.50% 1/16W
R693	1-218-738-11	s	CHIP, METAL 82K 0.50% 1/16W
R695	1-218-727-11	s	METAL 30K 0.50% 1/16W
R696	1-218-723-11	s	METAL 20K 0.50% 1/16W
R697	1-218-692-11	s	CHIP, METAL 1K 0.50% 1/16W
R698	1-218-706-11	s	METAL 3.9K 0.50% 1/16W
R699	1-218-745-11	s	CHIP, METAL 160K 0.50% 1/16W
R700	1-218-668-11	s	CHIP, METAL 100 0.50% 1/16W
R701	1-218-668-11	s	CHIP, METAL 100 0.50% 1/16W
R702	1-218-703-11	s	CHIP, METAL 3K 0.50% 1/16W
R703	1-218-703-11	s	CHIP, METAL 3K 0.50% 1/16W
R704	1-218-703-11	s	CHIP, METAL 3K 0.50% 1/16W
R705	1-218-740-11	s	METAL 100K 0.50% 1/16W
R706	1-218-692-11	s	CHIP, METAL 1K 0.50% 1/16W
R707	1-218-660-91	s	CHIP, METAL 47 0.50% 1/16W
R708	1-218-692-11	s	CHIP, METAL 1K 0.50% 1/16W
R709	1-218-692-11	s	CHIP, METAL 1K 0.50% 1/16W
R710	1-216-864-11	s	METAL, CHIP 0 5% 1/16W
R711	1-218-708-11	s	METAL 4.7K 0.50% 1/16W

(PR-200 BOARD)

Ref. No. or Q'ty	Part No.	SP	Description
R726	1-218-652-11	s	CHIP, METAL 22 0.50% 1/16W
R727	1-218-692-11	s	CHIP, METAL 1K 0.50% 1/16W
RV2	1-241-833-11	s	RES, ADJ, METAL 10K
RV3	1-241-829-21	s	RES, ADJ, METAL 1K
RV204	1-241-825-11	s	RES, ADJ, METAL 50
RV206	1-241-828-21	s	RES, ADJ, METAL 500
RV404	1-241-825-11	s	RES, ADJ, METAL 50
RV406	1-241-828-21	s	RES, ADJ, METAL 500
RV604	1-241-825-11	s	RES, ADJ, METAL 50
RV606	1-241-828-21	s	RES, ADJ, METAL 500
TH401	1-810-482-21	s	THERMISTOR

PS-400 BOARD

Ref. No. or Q'ty	Part No.	SP	Description
1pc	A-8273-150-A	o	MOUNTED CIRCUIT BOARD, PS-400 (FOR HDCA-750)
1pc	A-8277-038-A	o	MOUNTED CIRCUIT BOARD, PS-400 (FOR HDC-700)
1pc	3-724-753-01	o	RING
1pc	3-729-061-01	s	SCREW (M2X4.5) (TYPE 1)
1pc	7-621-775-68	s	SCREW +B 2.6X12
1pc	7-623-922-11	s	WASHER 2.0, NYLON
1pc	7-688-001-12	s	WASHER 2, MIDDLE
C1	1-164-004-11	s	CERAMIC, CHIP 0.1uF 10% 25V
C2	1-135-091-00	s	TANTALUM, CHIP 1uF 20% 16V
C3	1-107-689-21	s	TANTAL 1uF 20% 35V
C4	1-135-091-00	s	TANTALUM, CHIP 1uF 20% 16V
C6	1-104-851-11	s	TANTALUM, CHIP 10uF 20% 10V
C8	1-104-851-11	s	TANTALUM, CHIP 10uF 20% 10V
C9	1-163-038-00	s	CHIP, CERAMIC 0.1uF 25V
C10	1-163-038-00	s	CHIP, CERAMIC 0.1uF 25V
C11	1-135-091-00	s	TANTALUM, CHIP 1uF 20% 16V
C12	1-135-091-00	s	TANTALUM, CHIP 1uF 20% 16V
C13	1-110-501-11	s	CERAMIC 0.33uF 10% 16V
C14	1-164-232-11	s	CERAMIC, CHIP 0.01uF 10% 50V
C15	1-135-091-00	s	TANTALUM, CHIP 1uF 20% 16V
C16	1-110-501-11	s	CERAMIC 0.33uF 10% 16V
C17	1-164-004-11	s	CERAMIC, CHIP 0.1uF 10% 25V
C18	1-163-131-00	s	CERAMIC, CHIP 390PF 5% 50V
C19	1-104-851-11	s	TANTALUM, CHIP 10uF 20% 10V
C20	1-163-038-00	s	CHIP, CERAMIC 0.1uF 25V
C21	1-104-760-11	s	CERAMIC, CHIP 0.047uF 10% 50V
C22	1-135-091-00	s	TANTALUM, CHIP 1uF 20% 16V
C23	1-104-760-11	s	CERAMIC, CHIP 0.047uF 10% 50V
C24	1-104-851-11	s	TANTALUM, CHIP 10uF 20% 10V
C25	1-104-851-11	s	TANTALUM, CHIP 10uF 20% 10V
C26	1-163-038-00	s	CHIP, CERAMIC 0.1uF 25V
C27	1-163-038-00	s	CHIP, CERAMIC 0.1uF 25V
C28	1-110-501-11	s	CERAMIC 0.33uF 10% 16V
C29	1-163-038-00	s	CHIP, CERAMIC 0.1uF 25V
C30	1-163-038-00	s	CHIP, CERAMIC 0.1uF 25V
C31	1-111-058-11	s	CHIP, ELECT 150uF 20% 25V

(PS-400 BOARD)

Ref. No. or Q'ty	Part No.	SP	Description
C33	1-104-851-11	s	TANTALUM, CHIP 10uF 20% 10V
C34	1-163-038-00	s	CHIP, CERAMIC 0.1uF 25V
C35	1-135-091-00	s	TANTALUM, CHIP 1uF 20% 16V
C38	1-111-058-11	s	CHIP, ELECT 150uF 20% 25V
C39	1-104-851-11	s	TANTALUM, CHIP 10uF 20% 10V
C40	1-163-038-00	s	CHIP, CERAMIC 0.1uF 25V
C41	1-163-038-00	s	CHIP, CERAMIC 0.1uF 25V
C42	1-163-038-00	s	CHIP, CERAMIC 0.1uF 25V
C43	1-163-038-00	s	CHIP, CERAMIC 0.1uF 25V
C44	1-135-091-00	s	TANTALUM, CHIP 1uF 20% 16V
C45	1-163-038-00	s	CHIP, CERAMIC 0.1uF 25V
C47	1-163-038-00	s	CHIP, CERAMIC 0.1uF 25V
C48	1-163-038-00	s	CHIP, CERAMIC 0.1uF 25V
C49	1-163-038-00	s	CHIP, CERAMIC 0.1uF 25V
C50	1-163-038-00	s	CHIP, CERAMIC 0.1uF 25V
C52	1-104-851-11	s	TANTALUM, CHIP 10uF 20% 10V
C53	1-111-010-11	s	CHIP, ELECT 330uF 20% 10V
C54	1-127-516-11	s	ALUMN SOLID 220uF 20% 10V
C55	1-163-038-00	s	CHIP, CERAMIC 0.1uF 25V
C56	1-127-516-11	s	ALUMN SOLID 220uF 20% 10V
C57	1-111-010-11	s	CHIP, ELECT 330uF 20% 10V
C58	1-163-038-00	s	CHIP, CERAMIC 0.1uF 25V
C59	1-163-038-00	s	CHIP, CERAMIC 0.1uF 25V
C60	1-163-038-00	s	CHIP, CERAMIC 0.1uF 25V
C61	1-111-010-11	s	CHIP, ELECT 330uF 20% 10V
C63	1-163-038-00	s	CHIP, CERAMIC 0.1uF 25V
C64	1-163-038-00	s	CHIP, CERAMIC 0.1uF 25V
C65	1-111-010-11	s	CHIP, ELECT 330uF 20% 10V
C66	1-163-038-00	s	CHIP, CERAMIC 0.1uF 25V
C67	1-111-010-11	s	CHIP, ELECT 330uF 20% 10V
C69	1-127-515-11	s	ELECT 47uF 20% 10V
C70	1-163-038-00	s	CHIP, CERAMIC 0.1uF 25V
C71	1-163-038-00	s	CHIP, CERAMIC 0.1uF 25V
C73	1-163-038-00	s	CHIP, CERAMIC 0.1uF 25V
C74	1-163-038-00	s	CHIP, CERAMIC 0.1uF 25V
C75	1-111-010-11	s	CHIP, ELECT 330uF 20% 10V
C76	1-163-038-00	s	CHIP, CERAMIC 0.1uF 25V
C77	1-111-010-11	s	CHIP, ELECT 330uF 20% 10V
C78	1-163-038-00	s	CHIP, CERAMIC 0.1uF 25V
C79	1-163-038-00	s	CHIP, CERAMIC 0.1uF 25V
C80	1-163-038-00	s	CHIP, CERAMIC 0.1uF 25V
C81	1-111-010-11	s	CHIP, ELECT 330uF 20% 10V
C82	1-111-010-11	s	CHIP, ELECT 330uF 20% 10V
C83	1-163-038-00	s	CHIP, CERAMIC 0.1uF 25V
C85	1-163-245-11	s	CERAMIC 56PF 5% 50V
C86	1-163-038-00	s	CHIP, CERAMIC 0.1uF 25V
C87	1-111-112-11	s	CHIP, ELECT 68uF 20% 50V
C88	1-163-038-00	s	CHIP, CERAMIC 0.1uF 25V
C90	1-163-038-00	s	CHIP, CERAMIC 0.1uF 25V
C101	1-111-112-11	s	CHIP, ELECT 68uF 20% 50V
C102	1-163-038-00	s	CHIP, CERAMIC 0.1uF 25V
C103	1-163-038-00	s	CHIP, CERAMIC 0.1uF 25V
C104	1-111-030-11	s	CHIP, ELECT 56uF 20% 16V
C105	1-163-038-00	s	CHIP, CERAMIC 0.1uF 25V
C110	1-135-091-00	s	TANTALUM, CHIP 1uF 20% 16V
C111	1-104-851-11	s	TANTALUM, CHIP 10uF 20% 10V
C112	1-135-091-00	s	TANTALUM, CHIP 1uF 20% 16V
C113	1-163-038-00	s	CHIP, CERAMIC 0.1uF 25V
C114	1-163-038-00	s	CHIP, CERAMIC 0.1uF 25V
C115	1-104-760-11	s	CERAMIC, CHIP 0.047uF 10% 50V

(PS-400 BOARD)

Ref. No. or Q'ty	Part No.	SP	Description
C116	1-104-851-11	s	TANTALUM, CHIP 10uF 20% 10V
C117	1-163-038-00	s	CHIP, CERAMIC 0.1uF 25V
CB1	1-533-520-21	s	BREAKER, CIRCUIT 6A 250V
CN1	1-568-459-11	o	CONNECTOR 50P
CP1	1-464-758-11	s	CONVERTER, DC-DC (CD-54)
D1	8-719-030-03	s	DIODE EA60QC06-TE16F2
D2	8-719-059-52	s	DIODE MA3J14300LSO
D3	8-719-059-52	s	DIODE MA3J14300LSO
D4	8-719-059-52	s	DIODE MA3J14300LSO
D5	8-719-059-52	s	DIODE MA3J14300LSO
D6	8-719-051-05	s	DIODE EC10QS06-TE12L5
D7	8-719-023-53	s	DIODE EA30QS04-F
D8	8-719-059-22	s	DIODE NSQ03A06-TE16L
D9	8-719-059-22	s	DIODE NSQ03A06-TE16L
D10	8-719-059-52	s	DIODE MA3J14300LSO
D11	8-719-059-22	s	DIODE NSQ03A06-TE16L
D12	8-719-059-52	s	DIODE MA3J14300LSO
D13	8-719-051-05	s	DIODE EC10QS06-TE12L5
D14	8-719-059-52	s	DIODE MA3J14300LSO
D15	8-719-422-23	s	DIODE MA8047
FB1	1-543-528-11	s	BEAD, AMORPHOUS
FB2	1-543-528-11	s	BEAD, AMORPHOUS
FB3	1-543-528-11	s	BEAD, AMORPHOUS
FB4	1-543-528-11	s	BEAD, AMORPHOUS
FB5	1-543-528-11	s	BEAD, AMORPHOUS
FB6	1-543-528-11	s	BEAD, AMORPHOUS
IC1	8-759-066-68	s	IC REF-03GS
IC2	8-759-260-57	s	IC TL1451ACPW-E05
IC3	8-759-260-57	s	IC TL1451ACPW-E05
IC4	8-759-260-57	s	IC TL1451ACPW-E05
IC5	8-759-260-57	s	IC TL1451ACPW-E05
IC6	8-759-166-02	s	IC UPC814G2
IC7	8-759-075-97	s	IC LM358PW
IC10	8-759-260-57	s	IC TL1451ACPW-E05
L1	1-410-283-11	s	48uH (WITH CORE)
L2	1-412-048-11	s	CHOKE 65uH
L3	1-410-283-11	s	48uH (WITH CORE)
L4	1-414-700-11	s	INDUCTOR 47uH
L5	1-414-700-11	s	INDUCTOR 47uH
L6	1-414-700-11	s	INDUCTOR 47uH
L7	1-414-700-11	s	INDUCTOR 47uH
L8	1-414-700-11	s	INDUCTOR 47uH
L10	1-414-700-11	s	INDUCTOR 47uH
L11	1-414-700-11	s	INDUCTOR 47uH
L12	1-414-700-11	s	INDUCTOR 47uH
L13	1-414-699-11	s	INDUCTOR 6.8uH
L15	1-414-700-11	s	INDUCTOR 47uH
Q1	8-729-117-16	s	TRANSISTOR 2SA1611-M6
Q2	8-729-117-32	s	TRANSISTOR 2SC4177
Q3	8-729-117-32	s	TRANSISTOR 2SC4177
Q4	8-729-117-32	s	TRANSISTOR 2SC4177
Q5	8-729-117-16	s	TRANSISTOR 2SA1611-M6
Q6	8-729-117-32	s	TRANSISTOR 2SC4177
Q7	8-729-117-32	s	TRANSISTOR 2SC4177
Q8	8-729-117-16	s	TRANSISTOR 2SA1611-M6
Q9	8-729-117-32	s	TRANSISTOR 2SC4177

(PS-400 BOARD)

Ref. No. or Q'ty	Part No.	SP	Description
Q10	8-729-117-32	s	TRANSISTOR 2SC4177
Q11	8-729-117-32	s	TRANSISTOR 2SC4177
Q12	8-729-117-32	s	TRANSISTOR 2SC4177
Q13	8-729-928-90	s	TRANSISTOR DTC114EE
Q14	8-729-928-90	s	TRANSISTOR DTC114EE
Q15	8-729-117-32	s	TRANSISTOR 2SC4177
Q16	8-729-117-32	s	TRANSISTOR 2SC4177
Q17	8-729-928-90	s	TRANSISTOR DTC114EE
Q18	8-729-117-32	s	TRANSISTOR 2SC4177
Q19	8-729-117-32	s	TRANSISTOR 2SC4177
Q20	8-729-117-32	s	TRANSISTOR 2SC4177
Q21	8-729-117-32	s	TRANSISTOR 2SC4177
Q22	8-729-117-32	s	TRANSISTOR 2SC4177
Q23	8-729-117-32	s	TRANSISTOR 2SC4177
Q24	8-729-117-16	s	TRANSISTOR 2SA1611-M6
Q25	8-729-117-32	s	TRANSISTOR 2SC4177
Q26	8-729-117-32	s	TRANSISTOR 2SC4177
Q27	8-729-117-16	s	TRANSISTOR 2SA1611-M6
Q28	8-729-117-32	s	TRANSISTOR 2SC4177
Q29	8-729-117-16	s	TRANSISTOR 2SA1611-M6
Q30	8-729-117-32	s	TRANSISTOR 2SC4177
Q31	8-729-117-16	s	TRANSISTOR 2SA1611-M6
Q32	8-729-322-45	s	TRANSISTOR 2SJ182S
Q33	8-729-322-45	s	TRANSISTOR 2SJ182S
Q34	8-729-322-45	s	TRANSISTOR 2SJ182S
Q35	8-729-322-45	s	TRANSISTOR 2SJ182S
Q36	8-729-322-45	s	TRANSISTOR 2SJ182S
Q37	8-729-117-32	s	TRANSISTOR 2SC4177
Q38	8-729-928-90	s	TRANSISTOR DTC114EE
Q39	8-729-117-32	s	TRANSISTOR 2SC4177
Q40	8-729-117-16	s	TRANSISTOR 2SA1611-M6
Q41	8-729-117-32	s	TRANSISTOR 2SC4177
Q42	8-729-322-45	s	TRANSISTOR 2SJ182S
Q43	8-729-820-90	s	TRANSISTOR 2SD1621-ST
Q44	8-729-820-86	s	TRANSISTOR 2SB1121-ST
Q45	8-729-111-15	s	TRANSISTOR 2SA1385-Z-K
Q46	8-729-105-19	s	TRANSISTOR 2SC3518
Q47	8-729-117-32	s	TRANSISTOR 2SC4177
Q48	8-729-117-32	s	TRANSISTOR 2SC4177
Q49	8-729-117-16	s	TRANSISTOR 2SA1611-M6
Q50	8-729-928-90	s	TRANSISTOR DTC114EE
Q51	8-729-117-32	s	TRANSISTOR 2SC4177
Q53	8-729-928-90	s	TRANSISTOR DTC114EE
Q54	8-729-117-32	s	TRANSISTOR 2SC4177
Q60	8-729-117-32	s	TRANSISTOR 2SC4177
Q62	8-729-111-15	s	TRANSISTOR 2SA1385-Z-K
Q63	8-729-820-90	s	TRANSISTOR 2SD1621-ST
Q64	8-729-928-90	s	TRANSISTOR DTC114EE
Q65	8-729-117-32	s	TRANSISTOR 2SC4177
Q66	8-729-118-70	s	TRANSISTOR 2SK739-Z
Q70	8-729-117-32	s	TRANSISTOR 2SC4177
Q71	8-729-928-90	s	TRANSISTOR DTC114EE
Q72	8-729-117-32	s	TRANSISTOR 2SC4177
R1	1-216-675-11	s	METAL, CHIP 10K 0.5% 1/10W
R2	1-216-682-11	s	METAL, CHIP 20K 0.5% 1/10W
R3	1-216-675-11	s	METAL, CHIP 10K 0.5% 1/10W
R4	1-216-675-11	s	METAL, CHIP 10K 0.5% 1/10W
R5	1-216-672-11	s	METAL, CHIP 7.5K 0.5% 1/10W
R6	1-216-675-11	s	METAL, CHIP 10K 0.5% 1/10W

(PS-400 BOARD)

Ref. No. or Q'ty	Part No.	SP	Description
R7	1-216-675-11	s	METAL, CHIP 10K 0.5% 1/10W
R8	1-216-675-11	s	METAL, CHIP 10K 0.5% 1/10W
R9	1-216-675-11	s	METAL, CHIP 10K 0.5% 1/10W
R10	1-216-675-11	s	METAL, CHIP 10K 0.5% 1/10W
R11	1-216-682-11	s	METAL, CHIP 20K 0.5% 1/10W
R12	1-216-675-11	s	METAL, CHIP 10K 0.5% 1/10W
R13	1-216-675-11	s	METAL, CHIP 10K 0.5% 1/10W
R14	1-216-672-11	s	METAL, CHIP 7.5K 0.5% 1/10W
R15	1-216-675-11	s	METAL, CHIP 10K 0.5% 1/10W
R16	1-216-675-11	s	METAL, CHIP 10K 0.5% 1/10W
R17	1-216-675-11	s	METAL, CHIP 10K 0.5% 1/10W
R18	1-216-675-11	s	METAL, CHIP 10K 0.5% 1/10W
R19	1-216-651-11	s	METAL, CHIP 1K 0.5% 1/10W
R20	1-216-651-11	s	METAL, CHIP 1K 0.5% 1/10W
R21	1-216-655-11	s	CHIP, METAL 1.5K 0.50% 1/10W
R22	1-216-651-11	s	METAL, CHIP 1K 0.5% 1/10W
R23	1-216-660-11	s	METAL 2.4K 0.50% 1/10W
R24	1-216-651-11	s	METAL, CHIP 1K 0.5% 1/10W
R25	1-216-683-11	s	CHIP, METAL 22K 0.50% 1/10W
R26	1-216-660-11	s	METAL 2.4K 0.50% 1/10W
R27	1-216-675-11	s	METAL, CHIP 10K 0.5% 1/10W
R28	1-216-675-11	s	METAL, CHIP 10K 0.5% 1/10W
R29	1-216-651-11	s	METAL, CHIP 1K 0.5% 1/10W
R30	1-216-683-11	s	CHIP, METAL 22K 0.50% 1/10W
R31	1-216-672-11	s	METAL, CHIP 7.5K 0.5% 1/10W
R32	1-216-651-11	s	METAL, CHIP 1K 0.5% 1/10W
R33	1-216-699-11	s	CHIP, METAL 100K 0.50% 1/10W
R34	1-216-695-11	s	CHIP, METAL 68K 0.50% 1/10W
R35	1-216-687-11	s	METAL, CHIP 33K 0.5% 1/10W
R36	1-216-687-11	s	METAL, CHIP 33K 0.5% 1/10W
R37	1-218-758-11	s	CHIP, METAL 180K 0.50% 1/10W
R38	1-218-756-11	s	METAL 150K 0.50% 1/10W
R39	1-216-651-11	s	METAL, CHIP 1K 0.5% 1/10W
R40	1-216-675-11	s	METAL, CHIP 10K 0.5% 1/10W
R41	1-216-295-11	s	CHIP, CONDUCTOR 0
R42	1-216-677-11	s	METAL, CHIP 12K 0.5% 1/10W
R43	1-216-665-11	s	METAL, CHIP 3.9K 0.5% 1/10W
R44	1-216-651-11	s	METAL, CHIP 1K 0.5% 1/10W
R45	1-216-651-11	s	METAL, CHIP 1K 0.5% 1/10W
R46	1-216-677-11	s	METAL, CHIP 12K 0.5% 1/10W
R47	1-216-650-11	s	CHIP, METAL 910 0.50% 1/10W
R48	1-216-683-11	s	CHIP, METAL 22K 0.50% 1/10W
R49	1-216-616-11	s	METAL, CHIP 36 0.50% 1/10W
R50	1-216-620-11	s	METAL, CHIP 51 0.5% 1/10W
R51	1-216-617-11	s	METAL, CHIP 39 0.50% 1/10W
R52	1-216-672-11	s	METAL, CHIP 7.5K 0.5% 1/10W
R53	1-216-646-11	s	METAL, CHIP 620 0.5% 1/10W
R54	1-216-660-11	s	METAL 2.4K 0.50% 1/10W
R55	1-216-295-11	s	CHIP, CONDUCTOR 0
R56	1-216-658-11	s	METAL, CHIP 2K 0.5% 1/10W
R57	1-216-651-11	s	METAL, CHIP 1K 0.5% 1/10W
R58	1-216-695-11	s	CHIP, METAL 68K 0.50% 1/10W
R59	1-216-295-11	s	CHIP, CONDUCTOR 0
R60	1-216-687-11	s	METAL, CHIP 33K 0.5% 1/10W
R61	1-216-660-11	s	METAL 2.4K 0.50% 1/10W
R62	1-216-645-11	s	METAL 560 0.50% 1/10W
R63	1-216-295-11	s	CHIP, CONDUCTOR 0
R64	1-218-756-11	s	METAL 150K 0.50% 1/10W
R65	1-216-675-11	s	METAL, CHIP 10K 0.5% 1/10W
R66	1-216-670-11	s	METAL 6.2K 0.50% 1/10W

(PS-400 BOARD)

Ref. No. or Q'ty	Part No.	SP	Description
R67	1-216-675-11	s	METAL, CHIP 10K 0.5% 1/10W
R68	1-216-675-11	s	METAL, CHIP 10K 0.5% 1/10W
R69	1-216-699-11	s	CHIP, METAL 100K 0.50% 1/10W
R70	1-216-687-11	s	METAL, CHIP 33K 0.5% 1/10W
R71	1-216-636-11	s	METAL, CHIP 240 0.5% 1/10W
R72	1-216-687-11	s	METAL, CHIP 33K 0.5% 1/10W
R73	1-216-683-11	s	CHIP, METAL 22K 0.50% 1/10W
R74	1-216-683-11	s	CHIP, METAL 22K 0.50% 1/10W
R75	1-216-295-11	s	CHIP, CONDUCTOR 0
R76	1-216-651-11	s	METAL, CHIP 1K 0.5% 1/10W
R77	1-216-651-11	s	METAL, CHIP 1K 0.5% 1/10W
R78	1-216-675-11	s	METAL, CHIP 10K 0.5% 1/10W
R80	1-216-683-11	s	CHIP, METAL 22K 0.50% 1/10W
R81	1-216-667-11	s	METAL, CHIP 4.7K 0.5% 1/10W
R82	1-216-687-11	s	METAL, CHIP 33K 0.5% 1/10W
R83	1-216-663-11	s	METAL, CHIP 3.3K 0.5% 1/10W
R84	1-216-667-11	s	METAL, CHIP 4.7K 0.5% 1/10W
R85	1-216-695-11	s	CHIP, METAL 68K 0.50% 1/10W
R86	1-216-683-11	s	CHIP, METAL 22K 0.50% 1/10W
R87	1-216-687-11	s	METAL, CHIP 33K 0.5% 1/10W
R88	1-216-667-11	s	METAL, CHIP 4.7K 0.5% 1/10W
R89	1-216-667-11	s	METAL, CHIP 4.7K 0.5% 1/10W
R90	1-216-663-11	s	METAL, CHIP 3.3K 0.5% 1/10W
R91	1-218-755-11	s	METAL, CHIP 130K 0.50% 1/10W
R92	1-216-663-11	s	METAL, CHIP 3.3K 0.5% 1/10W
R93	1-216-663-11	s	METAL, CHIP 3.3K 0.5% 1/10W
R94	1-216-667-11	s	METAL, CHIP 4.7K 0.5% 1/10W
R95	1-216-667-11	s	METAL, CHIP 4.7K 0.5% 1/10W
R96	1-216-667-11	s	METAL, CHIP 4.7K 0.5% 1/10W
R97	1-216-667-11	s	METAL, CHIP 4.7K 0.5% 1/10W
R98	1-216-611-11	s	CHIP, METAL 22 0.50% 1/10W
R99	1-216-611-11	s	CHIP, METAL 22 0.50% 1/10W
R100	1-216-611-11	s	CHIP, METAL 22 0.50% 1/10W
R101	1-216-611-11	s	CHIP, METAL 22 0.50% 1/10W
R102	1-216-611-11	s	CHIP, METAL 22 0.50% 1/10W
R107	1-216-663-11	s	METAL, CHIP 3.3K 0.5% 1/10W
R108	1-216-675-11	s	METAL, CHIP 10K 0.5% 1/10W
R109	1-216-687-11	s	METAL, CHIP 33K 0.5% 1/10W
R110	1-216-667-11	s	METAL, CHIP 4.7K 0.5% 1/10W
R111	1-216-683-11	s	CHIP, METAL 22K 0.50% 1/10W
R112	1-216-634-11	s	CHIP, METAL 200 0.50% 1/10W
R113	1-216-669-11	s	METAL, CHIP 5.6K 0.5% 1/10W
R114	1-216-669-11	s	METAL, CHIP 5.6K 0.5% 1/10W
R115	1-216-656-11	s	METAL 1.6K 0.50% 1/10W
R116	1-208-784-11	s	CHIP, METAL 1.2K 0.50% 1/10W
R117	1-216-669-11	s	METAL, CHIP 5.6K 0.5% 1/10W
R118	1-216-665-11	s	METAL, CHIP 3.9K 0.5% 1/10W
R119	1-216-649-11	s	CHIP, METAL 820 0.50% 1/10W
R120	1-216-635-11	s	METAL, CHIP 220 0.5% 1/10W
R121	1-216-635-11	s	METAL, CHIP 220 0.5% 1/10W
R122	1-216-649-11	s	CHIP, METAL 820 0.50% 1/10W
R123	1-216-667-11	s	METAL, CHIP 4.7K 0.5% 1/10W
R124	1-216-663-11	s	METAL, CHIP 3.3K 0.5% 1/10W
R125	1-216-675-11	s	METAL, CHIP 10K 0.5% 1/10W
R126	1-216-657-11	s	METAL, CHIP 1.8K 0.5% 1/10W
R127	1-216-687-11	s	METAL, CHIP 33K 0.5% 1/10W
R128	1-216-611-11	s	CHIP, METAL 22 0.50% 1/10W
R129	1-216-683-11	s	CHIP, METAL 22K 0.50% 1/10W
R130	1-216-675-11	s	METAL, CHIP 10K 0.5% 1/10W
R131	1-216-687-11	s	METAL, CHIP 33K 0.5% 1/10W

(PS-400 BOARD)

Ref. No. or Q'ty	Part No.	SP	Description
R132	1-216-683-11	s	CHIP, METAL 22K 0.50% 1/10W
R135	1-216-651-11	s	METAL, CHIP 1K 0.5% 1/10W
R150	1-216-675-11	s	METAL, CHIP 10K 0.5% 1/10W
R151	1-216-675-11	s	METAL, CHIP 10K 0.5% 1/10W
R154	1-216-667-11	s	METAL, CHIP 4.7K 0.5% 1/10W
R160	1-216-635-11	s	METAL, CHIP 220 0.5% 1/10W
R161	1-216-676-11	s	CHIP, METAL 11K 0.50% 1/10W
R162	1-216-668-11	s	METAL, CHIP 5.1K 0.5% 1/10W
R163	1-216-665-11	s	METAL, CHIP 3.9K 0.5% 1/10W
R164	1-216-649-11	s	CHIP, METAL 820 0.50% 1/10W
R165	1-216-635-11	s	METAL, CHIP 220 0.5% 1/10W
R166	1-216-675-11	s	METAL, CHIP 10K 0.5% 1/10W
R167	1-216-687-11	s	METAL, CHIP 33K 0.5% 1/10W
R168	1-216-683-11	s	CHIP, METAL 22K 0.50% 1/10W
R169	1-216-691-11	s	CHIP, METAL 47K 0.50% 1/10W
R170	1-216-683-11	s	CHIP, METAL 22K 0.50% 1/10W
R171	1-216-651-11	s	METAL, CHIP 1K 0.5% 1/10W
R172	1-216-651-11	s	METAL, CHIP 1K 0.5% 1/10W
R173	1-216-695-11	s	CHIP, METAL 68K 0.50% 1/10W
R174	1-216-683-11	s	CHIP, METAL 22K 0.50% 1/10W
R175	1-216-687-11	s	METAL, CHIP 33K 0.5% 1/10W
R176	1-218-755-11	s	METAL, CHIP 130K 0.50% 1/10W
R177	1-216-692-11	s	CHIP, METAL 51K 0.50% 1/10W
R178	1-216-665-11	s	METAL, CHIP 3.9K 0.5% 1/10W
R179	1-216-638-11	s	METAL 300 0.50% 1/10W
R180	1-216-660-11	s	METAL 2.4K 0.50% 1/10W
R181	1-216-675-11	s	METAL, CHIP 10K 0.5% 1/10W
R182	1-216-687-11	s	METAL, CHIP 33K 0.5% 1/10W
R183	1-216-683-11	s	CHIP, METAL 22K 0.50% 1/10W

PS-401 BOARD

Ref. No. or Q'ty	Part No.	SP	Description
1pc	A-8273-136-A	o	MOUNTED CIRCUIT BOARD, PS-401
1pc	2-250-541-00	s	SUPPORT (A), PC BOARD
1pc	7-621-770-87	s	SCREW +B 2.6X5
1pc	1-562-579-21	s	PLUG, SHORTING
C1	1-137-105-11	s	FILM 0.01uF 20% 250
C2	⚠ 1-113-907-51	s	CERAMIC 0.0022uF 20% 250
C4	⚠ 1-113-907-51	s	CERAMIC 0.0022uF 20% 250
C5	1-113-711-11	s	ELECT 330uF 20% 450Vv
C6	1-126-405-11	s	ELECT 10uF 20% 50V
C7	1-163-038-00	s	CHIP, CERAMIC 0.1uF 25V
C8	1-163-009-11	s	CERAMIC, CHIP 0.001uF 10% 50V
C9	1-163-038-00	s	CHIP, CERAMIC 0.1uF 25V
C10	1-163-038-00	s	CHIP, CERAMIC 0.1uF 25V
C11	1-110-519-11	s	ELECT 4.7uF 20% 400V
C12	⚠ 1-113-903-11	s	ELECT 0.001uF 20% 250V
C13	⚠ 1-113-903-11	s	ELECT 0.001uF 20% 250V
C14	1-163-009-11	s	CERAMIC, CHIP 0.001uF 10% 50V
C15	1-163-009-11	s	CERAMIC, CHIP 0.001uF 10% 50V
C16	1-127-530-11	s	ELECT 22uF 20% 20V
C17	1-163-038-00	s	CHIP, CERAMIC 0.1uF 25V
C18	1-163-009-11	s	CERAMIC, CHIP 0.001uF 10% 50V
C19	1-163-009-11	s	CERAMIC, CHIP 0.001uF 10% 50V
C20	1-163-038-00	s	CHIP, CERAMIC 0.1uF 25V
C21	1-107-910-11	s	ELECT 100uF 20% 50V
C22	1-163-038-00	s	CHIP, CERAMIC 0.1uF 25V
C23	1-104-851-11	s	TANTALUM, CHIP 10uF 20% 10V
C24	1-163-131-00	s	CERAMIC, CHIP 390PF 5% 50V
C25	1-107-689-21	s	TANTAL 1uF 20% 35V
C26	1-128-526-11	s	ELECT 100uF 20% 25V
C27	1-128-526-11	s	ELECT 100uF 20% 25V
C28	1-163-038-00	s	CHIP, CERAMIC 0.1uF 25V
C29	1-163-038-00	s	CHIP, CERAMIC 0.1uF 25V
C30	1-163-038-00	s	CHIP, CERAMIC 0.1uF 25V
C31	1-107-823-11	s	CHIP, CERAMIC 0.47uF 10% 16V
C32	1-107-823-11	s	CHIP, CERAMIC 0.47uF 10% 16V
C33	1-110-519-11	s	ELECT 4.7uF 20% 400V
C34	1-110-519-11	s	ELECT 4.7uF 20% 400V
C35	1-104-664-11	s	ELECT 47uF 20% 25V
C36	1-104-664-11	s	ELECT 47uF 20% 25V
C37	1-110-519-11	s	ELECT 4.7uF 20% 400V
C38	1-163-038-00	s	CHIP, CERAMIC 0.1uF 25V
CB1	⚠ 1-533-518-21	s	BREAKER, CIRCUIT 3.15A 250V
CN1	1-564-104-00	o	PIN, CONNECTOR (B3P-VH) 3P
CN2	1-564-104-00	o	PIN, CONNECTOR (B3P-VH) 3P
CN3	1-580-561-11	o	PIN, CONNECTOR 12P
CN4	1-564-947-11	s	CONNECTOR, 2P, MALE
CP1	⚠ 1-473-667-11	s	CONVERTER UNIT, DC-DC
CP2	⚠ 8-749-010-64	s	PHOTO COUPLER TLP123F2
D1	8-719-000-20	s	THYRISTOR BCR10CM-12L
D2	8-719-940-59	s	DIODE DBB10G
D3	8-719-106-52	s	DIODE RD10M-B1
D4	8-719-157-36	s	DIODE RD6.8M-B
D5	8-719-024-81	s	DIODE 1SS300-TE85L
D6	8-719-106-52	s	DIODE RD10M-B1
D7	8-719-300-70	s	DIODE RH-1B
D8	8-719-051-05	s	DIODE EC10QS06-TE12L5
D9	8-719-051-05	s	DIODE EC10QS06-TE12L5

(PS-401 BOARD)

Ref. No. or Q'ty	Part No.	SP	Description
D12	8-759-147-47	s	IC UPC1093T
D13	8-719-300-70	s	DIODE RH-1B
D14	8-719-300-70	s	DIODE RH-1B
F1 ⚠	1-532-808-11	s	FUSE, RESISTOR TEMPERATURE 2A 250V
FB1	1-535-178-00	s	RES, FERRITE
IC1	8-759-060-66	s	IC TLC393CPS
IC2	8-759-060-66	s	IC TLC393CPS
IC3	8-759-937-36	s	IC TL1451ACNS
L1	1-408-142-21	s	INDUCTOR MICRO 22.5mH
L2	1-543-601-11	s	BEAD, FERRITE
L3	1-412-474-11	s	COIL, CHOKE 1.2mH
L4	1-412-474-11	s	COIL, CHOKE 1.2mH
PH1 ⚠	8-719-820-89	s	FPHOTO COUPLER TLP560J
Q1	8-729-142-57	s	TRANSISTOR 2SC3632-Z
Q2	8-729-026-82	s	TRANSISTOR 2SK1690
Q3	8-729-142-56	s	TRANSISTOR 2SA1413-Z
Q4	8-729-120-28	s	TRANSISTOR 2SC1623-L5L6
Q5	8-729-216-22	s	TRANSISTOR 2SA1162
Q6	8-729-037-97	s	TRANSISTOR 2SJ356-E2
R1	1-220-325-11	s	CHIP, METAL 1M 5% 1/4W
R2	1-220-325-11	s	CHIP, METAL 1M 5% 1/4W
R3	1-220-325-11	s	CHIP, METAL 1M 5% 1/4W
R4	1-220-325-11	s	CHIP, METAL 1M 5% 1/4W
R5	1-218-628-11	s	CHIP, METAL 150 5% 1W
R6	1-216-651-11	s	METAL, CHIP 1K 0.5% 1/10W
R7	1-220-313-11	s	CHIP, METAL 100K 5% 1/4W
R8	1-220-317-11	s	CHIP, METAL 220K 5% 1/4W
R9	1-216-684-11	s	CHIP, METAL 24K 0.50% 1/10W
R10	1-216-697-91	s	CHIP, METAL 82K 0.50% 1/10W
R11	1-216-673-11	s	METAL, CHIP 8.2K 0.5% 1/10W
R12	1-216-682-11	s	METAL, CHIP 20K 0.5% 1/10W
R13	1-220-325-11	s	CHIP, METAL 1M 5% 1/4W
R14	1-220-348-11	s	CHIP, METAL 2.2M 5% 1/4W
R16	1-216-699-11	s	CHIP, METAL 100K 0.50% 1/10W
R17	1-220-293-11	s	CHIP, METAL 47K 5% 1/4W
R18	1-220-293-11	s	CHIP, METAL 47K 5% 1/4W
R19	1-220-293-11	s	CHIP, METAL 47K 5% 1/4W
R20	1-220-293-11	s	CHIP, METAL 47K 5% 1/4W
R21	1-216-295-11	s	CHIP, CONDUCTOR 0
R22	1-216-689-11	s	CHIP, METAL 39K 0.50% 1/10W
R23	1-216-642-11	s	METAL, CHIP 430 0.5% 1/10W
R24	1-216-692-11	s	CHIP, METAL 51K 0.50% 1/10W
R25	1-216-655-11	s	CHIP, METAL 1.5K 0.50% 1/10W
R26	1-216-682-11	s	METAL, CHIP 20K 0.5% 1/10W
R27	1-218-614-11	s	CHIP, METAL 10 5% 1W
R28	1-216-699-11	s	CHIP, METAL 100K 0.50% 1/10W
R29	1-216-682-11	s	METAL, CHIP 20K 0.5% 1/10W
R30	1-216-651-11	s	METAL, CHIP 1K 0.5% 1/10W
R31	1-216-651-11	s	METAL, CHIP 1K 0.5% 1/10W
R32	1-216-660-11	s	METAL 2.4K 0.50% 1/10W
R33	1-216-665-11	s	METAL, CHIP 3.9K 0.5% 1/10W
R34	1-216-666-11	s	METAL, CHIP 4.3K 0.5% 1/10W
R35	1-216-647-11	s	METAL, CHIP 680 0.5% 1/10W
R36	1-216-676-11	s	CHIP, METAL 11K 0.50% 1/10W
R37	1-216-637-11	s	METAL, CHIP 270 0.5% 1/10W

(PS-401 BOARD)

Ref. No. or Q'ty	Part No.	SP	Description
R38	1-216-672-11	s	METAL, CHIP 7.5K 0.5% 1/10W
R39	1-216-611-11	s	CHIP, METAL 22 0.50% 1/10W
R40	1-216-686-11	s	CHIP, METAL 30K 0.50% 1/10W
R41	1-216-658-11	s	METAL, CHIP 2K 0.5% 1/10W
R42	1-216-674-11	s	METAL, CHIP 9.1K 0.5% 1/10W
R43	1-216-699-11	s	CHIP, METAL 100K 0.50% 1/10W
R44	1-216-683-11	s	CHIP, METAL 22K 0.50% 1/10W
R45	1-218-761-11	s	METAL 240K 0.50% 1/10W
R47	1-216-682-11	s	METAL, CHIP 20K 0.5% 1/10W
R48	1-216-682-11	s	METAL, CHIP 20K 0.5% 1/10W
R49	1-216-682-11	s	METAL, CHIP 20K 0.5% 1/10W
T1	1-421-400-00	s	COIL, LINE FILTER
T2	1-431-478-11	s	TRANSFORMER, DC/DC CONVERTER

http://getMANUAL.com

PS-416 BOARD

Ref. No. or Q'ty	Part No.	SP	Description
1pc	A-8273-173-A	o	MOUNTED CIRCUIT BOARD, PS-416
2pcs	3-697-455-01	o	INSULATING SHEET,PS
C1	1-137-105-11	s	FILM 0.01uF 20% 250
C3	1-136-203-11	s	FILM 0.01uF 5% 630
C4	1-111-107-11	s	CHIP, ELECT 10uF 20% 50V
C5	1-163-038-00	s	CHIP, CERAMIC 0.1uF 25V
C6	1-109-987-11	s	ELECT 270uF 20% 450
C7	1-109-987-11	s	ELECT 270uF 20% 450
C8	1-113-907-11	s	ELECT 0.0022uF 20% 250V
C11	1-163-038-00	s	CHIP, CERAMIC 0.1uF 25V
C12	1-163-038-00	s	CHIP, CERAMIC 0.1uF 25V
C14	1-135-091-00	s	TANTALUM, CHIP 1uF 20% 16V
C15	1-136-203-11	s	FILM 0.01uF 5% 630
C16	1-136-203-11	s	FILM 0.01uF 5% 630
C17	1-162-814-11	s	CERAMIC 0.47uF 10% 50V
C18	1-162-814-11	s	CERAMIC 0.47uF 10% 50V
C19	1-162-814-11	s	CERAMIC 0.47uF 10% 50V
C20	1-135-138-11	s	TANTALUM, CHIP 10uF 20% 25V
C21	1-162-814-11	s	CERAMIC 0.47uF 10% 50V
C22	1-107-890-11	s	ELECT 2200uF 20% 25V
C23	1-163-038-00	s	CHIP, CERAMIC 0.1uF 25V
C24	1-163-038-00	s	CHIP, CERAMIC 0.1uF 25V
C25	1-163-038-00	s	CHIP, CERAMIC 0.1uF 25V
C26	1-163-038-00	s	CHIP, CERAMIC 0.1uF 25V
C27	1-107-890-11	s	ELECT 2200uF 20% 25V
C28	1-107-890-11	s	ELECT 2200uF 20% 25V
C29	1-107-890-11	s	ELECT 2200uF 20% 25V
C30	1-107-890-11	s	ELECT 2200uF 20% 25V
C31	1-137-105-11	s	FILM 0.01uF 20% 250
C32	1-113-907-11	s	ELECT 0.0022uF 20% 250V
C33	1-113-907-11	s	ELECT 0.0022uF 20% 250V
C34	1-113-907-11	s	ELECT 0.0022uF 20% 250V
C35	1-113-907-11	s	ELECT 0.0022uF 20% 250V
C36	1-135-138-11	s	TANTALUM, CHIP 10uF 20% 25V
C39	1-104-913-11	s	TANTALUM, CHIP 10uF 20% 16V
C40	1-113-907-11	s	ELECT 0.0022uF 20% 250V
C41	1-113-907-11	s	ELECT 0.0022uF 20% 250V
C42	1-136-209-11	s	FILM 0.1uF 5% 400
C43	1-128-181-11	s	ELECT 10uF 20% 400
C44	1-162-814-11	s	CERAMIC 0.47uF 10% 50V
C118	1-163-009-11	s	CERAMIC, CHIP 0.001uF 10% 50V
C119	1-163-009-11	s	CERAMIC, CHIP 0.001uF 10% 50V
C120	1-163-038-00	s	CHIP, CERAMIC 0.1uF 25V
C121	1-107-910-11	s	ELECT 100uF 20% 50V
C122	1-163-038-00	s	CHIP, CERAMIC 0.1uF 25V
C123	1-104-851-11	s	TANTALUM, CHIP 10uF 20% 10V
C124	1-163-131-00	s	CERAMIC, CHIP 390PF 5% 50V
C125	1-107-689-21	s	TANTAL 1uF 20% 35V
C126	1-111-082-11	s	CHIP, ELECT 100uF 20% 35V
C127	1-111-082-11	s	CHIP, ELECT 100uF 20% 35V
C128	1-163-038-00	s	CHIP, CERAMIC 0.1uF 25V
C129	1-163-038-00	s	CHIP, CERAMIC 0.1uF 25V
C130	1-163-038-00	s	CHIP, CERAMIC 0.1uF 25V
C131	1-107-823-11	s	CHIP, CERAMIC 0.47uF 10% 16V
C132	1-107-823-11	s	CHIP, CERAMIC 0.47uF 10% 16V
C133	1-128-181-11	s	ELECT 10uF 20% 400
C135	1-111-054-11	s	CHIP, ELECT 39uF 20% 25V
C136	1-111-054-11	s	CHIP, ELECT 39uF 20% 25V

(PS-416 BOARD)

Ref. No. or Q'ty	Part No.	SP	Description
C138	1-163-038-00	s	CHIP, CERAMIC 0.1uF 25V
CB1	⚠ 1-533-518-21	s	BREAKER, CIRCUIT 3.15A 250V
CB2	⚠ 1-533-520-21	s	BREAKER, CIRCUIT 6A 250V
CB3	⚠ 1-533-519-21	s	BREAKER, CIRCUIT 4A 250V
CB4	⚠ 1-533-518-21	s	BREAKER, CIRCUIT 3.15A 250V
CB5	⚠ 1-533-517-21	s	BREAKER, CIRCUIT 1A 250V
CN1	⚠ 1-564-320-00	s	PIN, CONNECTOR (B2P-VH) 2P
CN2	⚠ 1-778-794-11	o	PIN, CONNECTOR 5P
CN3	1-580-535-11	o	PIN, CONNECTOR 12P
CN4	1-580-533-11	s	PIN, CONNECTOR 8P
CN5	⚠ 1-564-674-11	o	PIN, CONNECTOR 8P
CN6	1-580-533-11	s	PIN, CONNECTOR 8P
CP102	⚠ 8-719-053-15	s	PHOTO COUPLER PS2701-1-E3-L
D3	8-719-000-20	s	THYRISTOR BCR10CM-12L
D4	8-719-024-81	s	DIODE 1SS300-TE85L
D5	8-719-300-63	s	DIODE LB-156
D7	8-719-023-53	s	DIODE EA30QS04-F
D8	8-719-106-52	s	DIODE RD10M-B1
D9	8-719-157-36	s	DIODE RD6.8M-B
D10	8-719-024-81	s	DIODE 1SS300-TE85L
D11	8-719-157-54	s	DIODE RD12M-B
D12	8-719-024-81	s	DIODE 1SS300-TE85L
D13	8-719-024-81	s	DIODE 1SS300-TE85L
D14	8-719-023-53	s	DIODE EA30QS04-F
D17	8-719-157-69	s	DIODE RD20M-B
D18	8-719-157-54	s	DIODE RD12M-B
D19	8-719-820-59	s	DIODE 1S1588
D106	8-719-106-52	s	DIODE RD10M-B1
D107	8-719-300-70	s	DIODE RH-1B
D108	8-719-051-05	s	DIODE EC10QS06-TE12L5
D109	8-719-051-05	s	DIODE EC10QS06-TE12L5
D112	8-759-147-47	s	IC UPC1093T
D113	8-719-300-70	s	DIODE RH-1B
D114	8-719-300-70	s	DIODE RH-1B
F1	⚠ 1-532-808-11	s	FUSE, RESISTOR TEMPERATURE 2A 250V
IC2	8-759-060-66	s	IC TLC393CPS
IC102	8-759-060-66	s	IC TLC393CPS
IC103	8-759-937-36	s	IC TL1451ACNS
L1	1-459-401-00	s	COIL (WITH CORE)
L2	1-459-401-00	s	COIL (WITH CORE)
L3	1-410-253-11	s	COIL, CHOKE (TROIDAL) 80uH
L4	1-408-549-00	s	INDUCTOR 150uH
L5	1-408-549-00	s	INDUCTOR 150uH
L6	1-410-948-11	s	INDUCTOR 100uH
L7	1-408-142-21	s	INDUCTOR MICRO 22.5mH
L103	1-412-474-11	s	COIL, CHOKE 1.2mH
L104	1-412-474-11	s	COIL, CHOKE 1.2mH
PH1	⚠ 8-719-820-89	s	FPHOTO COUPLER TLP560J
Q1	8-729-142-57	s	TRANSISTOR 2SC3632-Z
Q4	8-729-117-32	s	TRANSISTOR 2SC4177
Q7	8-729-807-51	s	TRANSISTOR 2SD1623-S
Q8	8-729-029-14	s	TRANSISTOR DTC144EUA-T106
Q9	8-729-117-32	s	TRANSISTOR 2SC4177
Q102	8-729-026-82	s	TRANSISTOR 2SK1690

(PS-416 BOARD)

Ref. No. or Q'ty	Part No.	SP	Description
Q103	8-729-142-56	s	TRANSISTOR 2SA1413-Z
Q104	8-729-120-28	s	TRANSISTOR 2SC1623-L5L6
Q105	8-729-216-22	s	TRANSISTOR 2SA1162
Q106	8-729-037-97	s	TRANSISTOR 2SJ356-E2
R4	1-218-628-11	s	CHIP, METAL 150 5% 1W
R5	1-218-628-11	s	CHIP, METAL 150 5% 1W
R7	1-216-651-11	s	METAL, CHIP 1K 0.5% 1/10W
R12	1-216-673-11	s	METAL, CHIP 8.2K 0.5% 1/10W
R15	1-220-317-11	s	CHIP, METAL 220K 5% 1/4W
R16	1-216-684-11	s	CHIP, METAL 24K 0.50% 1/10W
R17	1-220-348-11	s	CHIP, METAL 2.2M 5% 1/4W
R18	1-216-697-91	s	CHIP, METAL 82K 0.50% 1/10W
R19	1-216-295-11	s	CHIP, CONDUCTOR 0
R20	1-216-682-11	s	METAL, CHIP 20K 0.5% 1/10W
R23	1-216-657-11	s	METAL, CHIP 1.8K 0.5% 1/10W
R24	1-216-657-11	s	METAL, CHIP 1.8K 0.5% 1/10W
R33	1-220-313-11	s	CHIP, METAL 100K 5% 1/4W
R36	1-220-325-11	s	CHIP, METAL 1M 5% 1/4W
R38	1-216-675-11	s	METAL, CHIP 10K 0.5% 1/10W
R39	1-216-627-11	s	CHIP, METAL 100 0.50% 1/10W
R40	1-216-699-11	s	CHIP, METAL 100K 0.50% 1/10W
R41	1-216-675-11	s	METAL, CHIP 10K 0.5% 1/10W
R50	1-220-325-11	s	CHIP, METAL 1M 5% 1/4W
R51	1-220-325-11	s	CHIP, METAL 1M 5% 1/4W
R52	1-220-325-11	s	CHIP, METAL 1M 5% 1/4W
R53	1-220-325-11	s	CHIP, METAL 1M 5% 1/4W
R117	1-220-293-11	s	CHIP, METAL 47K 5% 1/4W
R118	1-220-293-11	s	CHIP, METAL 47K 5% 1/4W
R119	1-220-293-11	s	CHIP, METAL 47K 5% 1/4W
R120	1-220-293-11	s	CHIP, METAL 47K 5% 1/4W
R121	1-216-295-11	s	CHIP, CONDUCTOR 0
R122	1-216-689-11	s	CHIP, METAL 39K 0.50% 1/10W
R123	1-216-642-11	s	METAL, CHIP 430 0.5% 1/10W
R124	1-216-692-11	s	CHIP, METAL 51K 0.50% 1/10W
R125	1-216-655-11	s	CHIP, METAL 1.5K 0.50% 1/10W
R126	1-216-682-11	s	METAL, CHIP 20K 0.5% 1/10W
R127	1-218-614-11	s	CHIP, METAL 10 5% 1W
R128	1-216-699-11	s	CHIP, METAL 100K 0.50% 1/10W
R129	1-216-682-11	s	METAL, CHIP 20K 0.5% 1/10W
R130	1-216-651-11	s	METAL, CHIP 1K 0.5% 1/10W
R131	1-216-651-11	s	METAL, CHIP 1K 0.5% 1/10W
R132	1-216-660-11	s	METAL 2.4K 0.50% 1/10W
R133	1-216-665-11	s	METAL, CHIP 3.9K 0.5% 1/10W
R134	1-216-666-11	s	METAL, CHIP 4.3K 0.5% 1/10W
R135	1-216-647-11	s	METAL, CHIP 680 0.5% 1/10W
R136	1-216-676-11	s	CHIP, METAL 11K 0.50% 1/10W
R137	1-216-642-11	s	METAL, CHIP 430 0.5% 1/10W
R138	1-216-672-11	s	METAL, CHIP 7.5K 0.5% 1/10W
R139	1-216-611-11	s	CHIP, METAL 22 0.50% 1/10W
R140	1-216-682-11	s	METAL, CHIP 20K 0.5% 1/10W
R141	1-216-682-11	s	METAL, CHIP 20K 0.5% 1/10W
R143	1-216-699-11	s	CHIP, METAL 100K 0.50% 1/10W
R144	1-216-683-11	s	CHIP, METAL 22K 0.50% 1/10W
R145	1-218-762-11	s	CHIP, METAL 270K 0.50% 1/10W
R146	1-216-682-11	s	METAL, CHIP 20K 0.5% 1/10W
RY2	⚠ 1-755-056-11	s	RELAY
RY3	⚠ 1-515-898-11	s	RELAY

(PS-416 BOARD)

Ref. No. or Q'ty	Part No.	SP	Description
T1	1-421-400-00	s	COIL, LINE FILTER
T2	1-421-779-11	s	FILTER, LINE
T102	1-431-478-11	s	TRANSFORMER, DC/DC CONVERTER

PS-419 BOARD

Ref. No. or Q'ty	Part No.	SP	Description
1pc	A-8273-225-A	o	MOUNTED CIRCUIT BOARD, PS-419
C1	1-135-091-00	s	TANTALUM, CHIP 1uF 20% 16V
C2	1-104-851-11	s	TANTALUM, CHIP 10uF 20% 10V
C3	1-164-156-11	s	CERAMIC 0.1uF 25V
C4	1-135-091-00	s	TANTALUM, CHIP 1uF 20% 16V
C5	1-165-128-11	s	CERAMIC 0.22uF 16V
C6	1-164-392-11	s	CERAMIC 390PF 5% 50V
C7	1-164-677-11	s	CERAMIC 0.033uF 10% 16V
C8	1-104-851-11	s	TANTALUM, CHIP 10uF 20% 10V
C9	1-164-156-11	s	CERAMIC 0.1uF 25V
C10	1-111-058-11	s	CHIP, ELECT 150uF 20% 25V
C11	1-164-156-11	s	CERAMIC 0.1uF 25V
C12	1-111-058-11	s	CHIP, ELECT 150uF 20% 25V
C13	1-111-058-11	s	CHIP, ELECT 150uF 20% 25V
C14	1-164-156-11	s	CERAMIC 0.1uF 25V
C15	1-164-156-11	s	CERAMIC 0.1uF 25V
C16	1-127-516-11	s	ALUMN SOLID 220uF 20% 10V
C17	1-164-156-11	s	CERAMIC 0.1uF 25V
C18	1-127-518-11	s	ELECT (SOLID) 100uF 20% 16V
C19	1-164-156-11	s	CERAMIC 0.1uF 25V
C20	1-164-156-11	s	CERAMIC 0.1uF 25V
C21	1-165-128-11	s	CERAMIC 0.22uF 16V
CN1	1-573-665-11	s	CONNECTOR, PIN (PC BOARD) 14P
D1	8-719-059-52	s	DIODE MA3J14300LSO
D2	8-719-023-53	s	DIODE EA30QS04-F
FB1	1-543-528-11	s	BEAD, AMORPHOUS
IC1	8-759-937-36	s	IC TL1451ACNS
IC2	8-759-075-53	s	IC LM35DM
L1	1-410-283-11	s	48uH (WITH CORE)
L2	1-412-048-11	s	CHOKE 65uH
L3	1-410-283-11	s	48uH (WITH CORE)
Q1	8-729-117-32	s	TRANSISTOR 2SC4177
Q2	8-729-928-90	s	TRANSISTOR DTC114EE
Q3	8-729-117-32	s	TRANSISTOR 2SC4177
Q4	8-729-117-32	s	TRANSISTOR 2SC4177
Q5	8-729-117-32	s	TRANSISTOR 2SC4177
Q6	8-729-117-16	s	TRANSISTOR 2SA1611-M6
Q7	8-729-322-45	s	TRANSISTOR 2SJ182S
Q8	8-729-322-45	s	TRANSISTOR 2SJ182S
R1	1-218-692-11	s	CHIP, METAL 1K 0.50% 1/16W
R2	1-218-692-11	s	CHIP, METAL 1K 0.50% 1/16W
R3	1-218-692-11	s	CHIP, METAL 1K 0.50% 1/16W
R4	1-218-724-11	s	CHIP, METAL 22K 5% 1/16W
R5	1-218-736-11	s	METAL 68K 0.50% 1/16W
R6	1-218-713-11	s	CHIP, METAL 7.5K 0.50% 1/16W
R7	1-218-740-11	s	METAL 100K 0.50% 1/16W
R8	1-218-881-11	s	CHIP, METAL 27K 0.50% 1/16W
R9	1-218-714-11	s	METAL 8.2K 0.50% 1/16W
R10	1-218-700-11	s	METAL 2.2K 0.50% 1/16W
R11	1-218-716-11	s	METAL 10K 0.50% 1/16W
R12	1-218-713-11	s	CHIP, METAL 7.5K 0.50% 1/16W
R13	1-218-724-11	s	CHIP, METAL 22K 5% 1/16W
R14	1-218-708-11	s	METAL 4.7K 0.50% 1/16W
R15	1-218-704-11	s	METAL 3.3K 0.50% 1/16W

(PS-419 BOARD)

Ref. No. or Q'ty	Part No.	SP	Description
R16	1-218-708-11	s	METAL 4.7K 0.50% 1/16W
R17	1-218-652-11	s	CHIP, METAL 22 0.50% 1/16W
R18	1-218-652-11	s	CHIP, METAL 22 0.50% 1/16W
R19	1-218-713-11	s	CHIP, METAL 7.5K 0.50% 1/16W
RV1	1-241-829-21	s	RES, ADJ, METAL 1K

PS-445 BOARD

Ref. No. or Q'ty	Part No.	SP	Description
1pc	A-8273-196-A	o	MOUNTED CIRCUIT BOARD, PS-445
1pc	3-602-434-02	o	SUPPORT,PC BOARD
1pc	7-621-773-86	s	SCREW +B 2.6X4
C1	1-135-091-00	s	TANTALUM, CHIP 1uF 20% 16V
C2	1-104-851-11	s	TANTALUM, CHIP 10uF 20% 10V
C3	1-163-038-00	s	CHIP, CERAMIC 0.1uF 25V
C4	1-135-091-00	s	TANTALUM, CHIP 1uF 20% 16V
C5	1-164-489-11	s	CERAMIC CHIP 0.22uF 10% 16V
C6	1-163-131-00	s	CERAMIC, CHIP 390PF 5% 50V
C7	1-163-989-11	s	CERAMIC 0.033uF 10% 25V
C8	1-104-851-11	s	TANTALUM, CHIP 10uF 20% 10V
C9	1-163-038-00	s	CHIP, CERAMIC 0.1uF 25V
C10	1-111-058-11	s	CHIP, ELECT 150uF 20% 25V
C11	1-163-038-00	s	CHIP, CERAMIC 0.1uF 25V
C12	1-111-058-11	s	CHIP, ELECT 150uF 20% 25V
C13	1-111-058-11	s	CHIP, ELECT 150uF 20% 25V
C14	1-163-038-00	s	CHIP, CERAMIC 0.1uF 25V
C15	1-163-038-00	s	CHIP, CERAMIC 0.1uF 25V
C16	1-127-516-11	s	ALUMN SOLID 220uF 20% 10V
C17	1-163-038-00	s	CHIP, CERAMIC 0.1uF 25V
C18	1-127-518-11	s	ELECT (SOLID) 100uF 20% 16V
C19	1-163-038-00	s	CHIP, CERAMIC 0.1uF 25V
C20	1-163-038-00	s	CHIP, CERAMIC 0.1uF 25V
C21	1-164-489-11	s	CERAMIC CHIP 0.22uF 10% 16V
CN1	1-573-665-11	s	CONNECTOR, PIN (PC BOARD) 14P
D1	8-719-059-52	s	DIODE MA3J14300LSO
D2	8-719-023-53	s	DIODE EA30QS04-F
FB1	1-543-528-11	s	BEAD, AMORPHOUS
IC1	8-759-937-36	s	IC TL1451ACNS
IC2	8-759-075-53	s	IC LM35DM
L1	1-410-283-11	s	48uH (WITH CORE)
L2	1-412-048-11	s	CHOKE 65uH
L3	1-410-283-11	s	48uH (WITH CORE)
Q1	8-729-117-32	s	TRANSISTOR 2SC4177
Q2	8-729-900-53	s	TRANSISTOR DTC114EK
Q3	8-729-117-32	s	TRANSISTOR 2SC4177
Q4	8-729-117-32	s	TRANSISTOR 2SC4177
Q5	8-729-117-32	s	TRANSISTOR 2SC4177
Q6	8-729-117-16	s	TRANSISTOR 2SA1611-M6
Q7	8-729-322-45	s	TRANSISTOR 2SJ182S
Q8	8-729-322-45	s	TRANSISTOR 2SJ182S
R1	1-216-651-11	s	METAL, CHIP 1K 0.5% 1/10W
R2	1-216-651-11	s	METAL, CHIP 1K 0.5% 1/10W
R3	1-216-651-11	s	METAL, CHIP 1K 0.5% 1/10W
R4	1-216-683-11	s	CHIP, METAL 22K 0.50% 1/10W
R5	1-216-695-11	s	CHIP, METAL 68K 0.50% 1/10W
R6	1-216-687-11	s	METAL, CHIP 33K 0.5% 1/10W
R7	1-216-699-11	s	CHIP, METAL 100K 0.50% 1/10W
R8	1-216-685-11	s	METAL, CHIP 27K 0.5% 1/10W
R9	1-216-673-11	s	METAL, CHIP 8.2K 0.5% 1/10W
R10	1-216-659-11	s	METAL, CHIP 2.2K 0.5% 1/10W
R11	1-216-675-11	s	METAL, CHIP 10K 0.5% 1/10W
R12	1-216-687-11	s	METAL, CHIP 33K 0.5% 1/10W
R13	1-216-683-11	s	CHIP, METAL 22K 0.50% 1/10W
R14	1-216-667-11	s	METAL, CHIP 4.7K 0.5% 1/10W

(PS-445 BOARD)

Ref. No. or Q'ty	Part No.	SP	Description
R15	1-216-663-11	s	METAL, CHIP 3.3K 0.5% 1/10W
R16	1-216-667-11	s	METAL, CHIP 4.7K 0.5% 1/10W
R17	1-216-611-11	s	CHIP, METAL 22 0.50% 1/10W
R18	1-216-611-11	s	CHIP, METAL 22 0.50% 1/10W
R19	1-216-675-11	s	METAL, CHIP 10K 0.5% 1/10W
RV1	1-241-829-21	s	RES, ADJ, METAL 1K

RX-28 BOARD

Ref. No. or Q'ty	Part No.	SP	Description
1pc	A-8273-133-A	o	MOUNTED CIRCUIT BOARD, RX-28

SDI-10 BOARD

Ref. No. or Q'ty	Part No.	SP	Description
1pc	⚠ A-8273-134-A	o	MOUNTED CIRCUIT BOARD, SDI-10

SG-226 BOARD

Ref. No. or Q'ty	Part No.	SP	Description
1pc	A-8273-139-A	o	MOUNTED CIRCUIT BOARD, SG-226
1pc	3-602-441-02	o	PANEL,SG-226 PC BOARD
1pc	3-724-753-01	o	RING
6pcs	3-729-061-01	s	SCREW (M2X4.5) (TYPE 1)
C1	1-104-851-11	s	TANTALUM, CHIP 10uF 20% 10V
C2	1-164-156-11	s	CERAMIC 0.1uF 25V
C3	1-164-156-11	s	CERAMIC 0.1uF 25V
C4	1-164-156-11	s	CERAMIC 0.1uF 25V
C5	1-164-156-11	s	CERAMIC 0.1uF 25V
C6	1-104-852-11	s	TANTALUM, CHIP 22uF 20% 10V
C7	1-162-919-11	s	CERAMIC, CHIP 22PF 5% 50V
C8	1-162-919-11	s	CERAMIC, CHIP 22PF 5% 50V
C9	1-164-156-11	s	CERAMIC 0.1uF 25V
C10	1-164-156-11	s	CERAMIC 0.1uF 25V
C11	1-164-156-11	s	CERAMIC 0.1uF 25V
C12	1-164-156-11	s	CERAMIC 0.1uF 25V
C14	1-164-156-11	s	CERAMIC 0.1uF 25V
C15	1-164-156-11	s	CERAMIC 0.1uF 25V
C16	1-104-913-11	s	TANTALUM, CHIP 10uF 20% 16V
C17	1-162-927-11	s	CERAMIC, CHIP 100PF 5% 50V
C18	1-135-177-21	s	TANTALUM, CHIP 1uF 10% 25V
C19	1-162-921-11	s	CERAMIC, CHIP 33PF 5% 50V
C20	1-104-852-11	s	TANTALUM, CHIP 22uF 20% 10V
C21	1-104-852-11	s	TANTALUM, CHIP 22uF 20% 10V
C22	1-164-156-11	s	CERAMIC 0.1uF 25V
C23	1-162-927-11	s	CERAMIC, CHIP 100PF 5% 50V
C24	1-162-927-11	s	CERAMIC, CHIP 100PF 5% 50V
C25	1-135-177-21	s	TANTALUM, CHIP 1uF 10% 25V
C26	1-135-177-21	s	TANTALUM, CHIP 1uF 10% 25V
C27	1-164-156-11	s	CERAMIC 0.1uF 25V
C30	1-164-156-11	s	CERAMIC 0.1uF 25V
C31	1-164-156-11	s	CERAMIC 0.1uF 25V
C32	1-164-156-11	s	CERAMIC 0.1uF 25V
C33	1-164-156-11	s	CERAMIC 0.1uF 25V
C34	1-164-156-11	s	CERAMIC 0.1uF 25V
C35	1-164-156-11	s	CERAMIC 0.1uF 25V
C36	1-164-156-11	s	CERAMIC 0.1uF 25V
C37	1-164-156-11	s	CERAMIC 0.1uF 25V
C38	1-164-156-11	s	CERAMIC 0.1uF 25V
C39	1-164-156-11	s	CERAMIC 0.1uF 25V
C40	1-164-156-11	s	CERAMIC 0.1uF 25V
C41	1-164-156-11	s	CERAMIC 0.1uF 25V
C42	1-135-166-21	s	TANTALUM, CHIP 47uF 10% 10V
C43	1-164-156-11	s	CERAMIC 0.1uF 25V
C44	1-164-156-11	s	CERAMIC 0.1uF 25V
C45	1-164-156-11	s	CERAMIC 0.1uF 25V
C46	1-164-156-11	s	CERAMIC 0.1uF 25V
C47	1-164-156-11	s	CERAMIC 0.1uF 25V
C48	1-164-156-11	s	CERAMIC 0.1uF 25V
C49	1-164-156-11	s	CERAMIC 0.1uF 25V
C50	1-162-921-11	s	CERAMIC, CHIP 33PF 5% 50V
C51	1-162-921-11	s	CERAMIC, CHIP 33PF 5% 50V
C52	1-162-921-11	s	CERAMIC, CHIP 33PF 5% 50V
C53	1-164-156-11	s	CERAMIC 0.1uF 25V
C54	1-162-927-11	s	CERAMIC, CHIP 100PF 5% 50V
C55	1-164-156-11	s	CERAMIC 0.1uF 25V
C56	1-164-156-11	s	CERAMIC 0.1uF 25V
C57	1-164-156-11	s	CERAMIC 0.1uF 25V
C58	1-164-156-11	s	CERAMIC 0.1uF 25V

(SG-226 BOARD)

Ref. No. or Q'ty	Part No.	SP	Description
C59	1-104-851-11	s	TANTALUM, CHIP 10uF 20% 10V
C60	1-104-851-11	s	TANTALUM, CHIP 10uF 20% 10V
C61	1-164-156-11	s	CERAMIC 0.1uF 25V
C62	1-135-208-11	s	TANTAL 1uF 20% 10V
C63	1-104-851-11	s	TANTALUM, CHIP 10uF 20% 10V
C64	1-164-156-11	s	CERAMIC 0.1uF 25V
C65	1-164-156-11	s	CERAMIC 0.1uF 25V
C66	1-104-851-11	s	TANTALUM, CHIP 10uF 20% 10V
C67	1-162-957-11	s	CERAMIC 220PF 5% 50V
C68	1-164-156-11	s	CERAMIC 0.1uF 25V
C69	1-164-156-11	s	CERAMIC 0.1uF 25V
C70	1-164-156-11	s	CERAMIC 0.1uF 25V
C71	1-135-215-21	s	TANTALUM, CHIP 6.8uF 20% 16V
C72	1-162-924-11	s	CERAMIC 56PF 5% 50V
C73	1-135-177-21	s	TANTALUM, CHIP 1uF 10% 25V
C74	1-164-156-11	s	CERAMIC 0.1uF 25V
C75	1-164-156-11	s	CERAMIC 0.1uF 25V
C76	1-164-156-11	s	CERAMIC 0.1uF 25V
C77	1-162-970-11	s	CERAMIC, CHIP 0.01uF 10% 25V
C78	1-164-156-11	s	CERAMIC 0.1uF 25V
C79	1-164-156-11	s	CERAMIC 0.1uF 25V
C80	1-104-851-11	s	TANTALUM, CHIP 10uF 20% 10V
C81	1-162-970-11	s	CERAMIC, CHIP 0.01uF 10% 25V
C82	1-164-156-11	s	CERAMIC 0.1uF 25V
C83	1-164-156-11	s	CERAMIC 0.1uF 25V
C84	1-164-156-11	s	CERAMIC 0.1uF 25V
C85	1-162-919-11	s	CERAMIC, CHIP 22PF 5% 50V
C86	1-164-156-11	s	CERAMIC 0.1uF 25V
C87	1-162-919-11	s	CERAMIC, CHIP 22PF 5% 50V
C88	1-164-156-11	s	CERAMIC 0.1uF 25V
C89	1-162-919-11	s	CERAMIC, CHIP 22PF 5% 50V
C90	1-164-156-11	s	CERAMIC 0.1uF 25V
C91	1-164-156-11	s	CERAMIC 0.1uF 25V
C92	1-164-156-11	s	CERAMIC 0.1uF 25V
C93	1-164-156-11	s	CERAMIC 0.1uF 25V
C94	1-164-156-11	s	CERAMIC 0.1uF 25V
C95	1-164-156-11	s	CERAMIC 0.1uF 25V
C96	1-164-156-11	s	CERAMIC 0.1uF 25V
C97	1-162-970-11	s	CERAMIC, CHIP 0.01uF 10% 25V
C98	1-164-156-11	s	CERAMIC 0.1uF 25V
C99	1-104-851-11	s	TANTALUM, CHIP 10uF 20% 10V
C100	1-164-156-11	s	CERAMIC 0.1uF 25V
C101	1-164-156-11	s	CERAMIC 0.1uF 25V
C103	1-162-927-11	s	CERAMIC, CHIP 100PF 5% 50V
C104	1-162-970-11	s	CERAMIC, CHIP 0.01uF 10% 25V
C105	1-164-156-11	s	CERAMIC 0.1uF 25V
C106	1-164-156-11	s	CERAMIC 0.1uF 25V
C107	1-164-156-11	s	CERAMIC 0.1uF 25V
C108	1-164-217-11	s	CERAMIC 150PF 5% 50V
C110	1-164-217-11	s	CERAMIC 150PF 5% 50V
C111	1-162-927-11	s	CERAMIC, CHIP 100PF 5% 50V
C112	1-164-217-11	s	CERAMIC 150PF 5% 50V
C113	1-164-217-11	s	CERAMIC 150PF 5% 50V
C114	1-164-217-11	s	CERAMIC 150PF 5% 50V
C115	1-104-851-11	s	TANTALUM, CHIP 10uF 20% 10V
C116	1-164-156-11	s	CERAMIC 0.1uF 25V
C202	1-162-922-00	s	CERAMIC, CHIP 39PF 5% 50V
C204	1-162-915-11	s	CERAMIC, CHIP 10PF 5PF 50V

(SG-226 BOARD)

Ref. No. or Q'ty	Part No.	SP	Description
CNI24	1-540-197-11	o	SOCKET, IC
CV2	1-141-430-21	s	CAP, CHIP TRIMMER
D1	8-719-059-52	s	DIODE MA3J14300LSO
D2	8-719-059-52	s	DIODE MA3J14300LSO
D3	8-719-059-59	s	DIODE MA3J74200LSO
D4	8-719-820-41	s	DIODE 1SS302
D5	8-719-059-52	s	DIODE MA3J14300LSO
D6	8-719-059-52	s	DIODE MA3J14300LSO
D7	8-719-059-59	s	DIODE MA3J74200LSO
D8	8-719-059-59	s	DIODE MA3J74200LSO
D9	8-719-059-52	s	DIODE MA3J14300LSO
D10	8-719-059-52	s	DIODE MA3J14300LSO
D11	8-719-059-52	s	DIODE MA3J14300LSO
IC3	8-759-076-06	s	IC TL064CPW
IC4	8-759-185-42	s	IC LM4040AIM3-2.5
IC5	8-759-066-59	s	IC TC74HC4053AFS
IC6	8-759-058-64	s	IC TC7S32FU(TE85R)
IC7	8-759-242-78	s	IC TC7W02F
IC8	8-759-054-56	s	IC SN75179BPS
IC9	8-759-082-57	s	IC TC7W04FU
IC10	8-759-078-75	s	IC UPD6453GT-610
IC11	8-759-184-64	s	IC TC4W66FU
IC12	8-759-082-58	s	IC TC7W08FU
IC13	8-759-323-73	o	IC HD6475328F10
IC14	8-759-277-99	s	IC CXD8889R
IC15	8-759-149-05	s	IC UPD71051GB-10-3B4
IC16	8-759-973-71	s	IC TL7705CPS-B
IC17	8-759-082-60	s	IC TC7S66FU
IC18	8-759-092-81	s	IC SN75158PS
IC19	8-759-165-37	s	IC X24164SIC7000
IC20	8-759-082-61	s	IC TC4W53FU
IC21	8-759-058-58	s	IC TC7S04FU(TE85R)
IC22	8-759-082-58	s	IC TC7W08FU
IC23	8-759-277-99	s	IC CXD8889R
IC24	8-759-176-87	o	IC M27V201-200L6
IC34	8-752-337-95	s	IC CXK58257ATM-10LL
IC35	8-759-082-58	s	IC TC7W08FU
IC37	8-759-277-99	s	IC CXD8889R
IC38	8-759-173-16	s	IC TL062CPW
IC39	8-759-082-61	s	IC TC4W53FU
IC40	8-759-066-59	s	IC TC74HC4053AFS
IC42	8-759-285-09	s	IC CXD8892Q
IC45	8-759-258-51	s	IC TC74AC74FS(EL)
IC46	8-759-054-61	s	IC CLC505AJE
IC47	8-759-054-61	s	IC CLC505AJE
IC48	8-759-980-44	s	IC TL712CPS
IC49	8-759-173-16	s	IC TL062CPW
IC50	8-759-154-60	s	IC UPD71055GB-10-3B4
IC51	8-759-180-08	s	IC TC74HC4538AFS
IC52	8-759-385-12	s	IC TC74ACT374FS(EL)
IC53	8-759-054-61	s	IC CLC505AJE
IC54	8-759-385-12	s	IC TC74ACT374FS(EL)
IC55	8-759-054-61	s	IC CLC505AJE
IC56	8-759-066-59	s	IC TC74HC4053AFS
IC57	8-759-336-80	s	IC 74ACT125SJ
IC58	8-759-271-86	s	IC TC7SH04FU
IC59	8-759-059-50	s	IC MB88351PFV

(SG-226 BOARD)

Ref. No. or Q'ty	Part No.	SP	Description
IC60	8-759-069-36	s	IC MC74HC4046AF
IC61	8-759-182-95	s	IC HD151015T
IC62	8-759-929-21	s	IC TLC27L2CPS
IC63	8-759-196-96	s	IC TC7SH08FU-TE85R
IC64	8-759-049-86	s	IC SN74HCT244APW-E20
IC66	8-759-051-48	s	IC SN74HCT541APW-E05
IC67	8-759-051-48	s	IC SN74HCT541APW-E05
IC69	8-759-066-59	s	IC TC74HC4053AFS
IC71	8-759-154-60	s	IC UPD71055GB-10-3B4
L4	1-410-393-11	s	INDUCTOR CHIP 100uH
L5	1-410-733-11	s	INDUCTOR CHIP 0.22uH
L6	1-410-733-11	s	INDUCTOR CHIP 0.22uH
L7	1-410-379-31	s	INDUCTOR CHIP 6.8uH
PH1	8-749-924-62	s	PNOTO COUPLER PC410
PH2	8-749-924-62	s	PNOTO COUPLER PC410
PH3	8-749-924-62	s	PNOTO COUPLER PC410
PH4	8-749-924-62	s	PNOTO COUPLER PC410
PH5	8-749-924-62	s	PNOTO COUPLER PC410
PH6	8-749-924-62	s	PNOTO COUPLER PC410
Q1	8-729-820-86	s	TRANSISTOR 2SB1121-ST
Q2	8-729-820-86	s	TRANSISTOR 2SB1121-ST
Q3	8-729-143-13	s	TRANSISTOR 2SC4176-B34
Q4	8-729-143-13	s	TRANSISTOR 2SC4176-B34
Q5	8-729-143-07	s	TRANSISTOR 2SA1610-Y33
Q6	8-729-820-90	s	TRANSISTOR 2SD1621-ST
Q9	8-729-924-39	s	TRANSISTOR DTC143XU
Q10	8-729-028-88	s	TRANSISTOR DTA143XUA-T106
Q11	8-729-143-07	s	TRANSISTOR 2SA1610-Y33
Q12	8-729-143-13	s	TRANSISTOR 2SC4176-B34
Q13	8-729-143-13	s	TRANSISTOR 2SC4176-B34
Q14	8-729-143-13	s	TRANSISTOR 2SC4176-B34
Q15	8-729-143-13	s	TRANSISTOR 2SC4176-B34
Q16	8-729-143-13	s	TRANSISTOR 2SC4176-B34
Q17	8-729-143-07	s	TRANSISTOR 2SA1610-Y33
Q18	8-729-143-07	s	TRANSISTOR 2SA1610-Y33
Q19	8-729-143-13	s	TRANSISTOR 2SC4176-B34
Q20	8-729-143-13	s	TRANSISTOR 2SC4176-B34
Q23	8-729-924-39	s	TRANSISTOR DTC143XU
Q24	8-729-924-39	s	TRANSISTOR DTC143XU
Q30	8-729-924-39	s	TRANSISTOR DTC143XU
R1	1-218-716-11	s	METAL 10K 0.50% 1/16W
R2	1-218-716-11	s	METAL 10K 0.50% 1/16W
R3	1-218-732-11	s	METAL 47K 0.50% 1/16W
R4	1-218-692-11	s	CHIP, METAL 1K 0.50% 1/16W
R5	1-218-692-11	s	CHIP, METAL 1K 0.50% 1/16W
R6	1-218-711-11	s	METAL 6.2K 0.50% 1/16W
R7	1-218-699-11	s	CHIP, METAL 2K 0.50% 1/16W
R8	1-218-699-11	s	CHIP, METAL 2K 0.50% 1/16W
R9	1-218-692-11	s	CHIP, METAL 1K 0.50% 1/16W
R10	1-218-692-11	s	CHIP, METAL 1K 0.50% 1/16W
R11	1-218-706-11	s	METAL 3.9K 0.50% 1/16W
R12	1-218-711-11	s	METAL 6.2K 0.50% 1/16W
R13	1-218-732-11	s	METAL 47K 0.50% 1/16W
R14	1-218-732-11	s	METAL 47K 0.50% 1/16W
R15	1-218-644-11	s	METAL 10 0.50% 1/16W
R16	1-218-644-11	s	METAL 10 0.50% 1/16W
R17	1-218-644-11	s	METAL 10 0.50% 1/16W

(SG-226 BOARD)

Ref. No. or Q'ty	Part No.	SP	Description
R18	1-218-644-11	s	METAL 10 0.50% 1/16W
R19	1-218-644-11	s	METAL 10 0.50% 1/16W
R20	1-218-644-11	s	METAL 10 0.50% 1/16W
R21	1-218-644-11	s	METAL 10 0.50% 1/16W
R22	1-218-644-11	s	METAL 10 0.50% 1/16W
R23	1-218-644-11	s	METAL 10 0.50% 1/16W
R24	1-218-644-11	s	METAL 10 0.50% 1/16W
R25	1-218-644-11	s	METAL 10 0.50% 1/16W
R26	1-218-644-11	s	METAL 10 0.50% 1/16W
R27	1-218-644-11	s	METAL 10 0.50% 1/16W
R28	1-218-644-11	s	METAL 10 0.50% 1/16W
R29	1-218-740-11	s	METAL 100K 0.50% 1/16W
R30	1-218-716-11	s	METAL 10K 0.50% 1/16W
R31	1-218-692-11	s	CHIP, METAL 1K 0.50% 1/16W
R32	1-218-668-11	s	CHIP, METAL 100 0.50% 1/16W
R33	1-218-724-11	s	CHIP, METAL 22K 5% 1/16W
R34	1-218-740-11	s	METAL 100K 0.50% 1/16W
R35	1-218-724-11	s	CHIP, METAL 22K 5% 1/16W
R36	1-218-740-11	s	METAL 100K 0.50% 1/16W
R37	1-218-684-11	s	CHIP, METAL 470 0.50% 1/16W
R38	1-218-684-11	s	CHIP, METAL 470 0.50% 1/16W
R39	1-218-740-11	s	METAL 100K 0.50% 1/16W
R40	1-218-740-11	s	METAL 100K 0.50% 1/16W
R41	1-218-675-11	s	CHIP, METAL 200 0.50% 1/16W
R42	1-218-675-11	s	CHIP, METAL 200 0.50% 1/16W
R43	1-218-740-11	s	METAL 100K 0.50% 1/16W
R44	1-218-692-11	s	CHIP, METAL 1K 0.50% 1/16W
R45	1-218-692-11	s	CHIP, METAL 1K 0.50% 1/16W
R46	1-218-740-11	s	METAL 100K 0.50% 1/16W
R47	1-218-740-11	s	METAL 100K 0.50% 1/16W
R48	1-218-740-11	s	METAL 100K 0.50% 1/16W
R49	1-218-703-11	s	CHIP, METAL 3K 0.50% 1/16W
R50	1-218-695-11	s	METAL 1.3K 0.50% 1/16W
R51	1-218-708-11	s	METAL 4.7K 0.50% 1/16W
R52	1-218-716-11	s	METAL 10K 0.50% 1/16W
R53	1-218-716-11	s	METAL 10K 0.50% 1/16W
R54	1-218-675-11	s	CHIP, METAL 200 0.50% 1/16W
R55	1-218-675-11	s	CHIP, METAL 200 0.50% 1/16W
R56	1-218-675-11	s	CHIP, METAL 200 0.50% 1/16W
R57	1-218-675-11	s	CHIP, METAL 200 0.50% 1/16W
R58	1-218-692-11	s	CHIP, METAL 1K 0.50% 1/16W
R59	1-218-692-11	s	CHIP, METAL 1K 0.50% 1/16W
R60	1-218-692-11	s	CHIP, METAL 1K 0.50% 1/16W
R61	1-218-692-11	s	CHIP, METAL 1K 0.50% 1/16W
R62	1-218-684-11	s	CHIP, METAL 470 0.50% 1/16W
R63	1-218-684-11	s	CHIP, METAL 470 0.50% 1/16W
R64	1-218-684-11	s	CHIP, METAL 470 0.50% 1/16W
R65	1-218-684-11	s	CHIP, METAL 470 0.50% 1/16W
R66	1-218-716-11	s	METAL 10K 0.50% 1/16W
R67	1-218-716-11	s	METAL 10K 0.50% 1/16W
R68	1-218-716-11	s	METAL 10K 0.50% 1/16W
R69	1-218-716-11	s	METAL 10K 0.50% 1/16W
R70	1-218-701-11	s	METAL 2.4K 0.50% 1/16W
R71	1-218-716-11	s	METAL 10K 0.50% 1/16W
R72	1-218-676-11	s	METAL 220 0.50% 1/16W
R73	1-218-676-11	s	METAL 220 0.50% 1/16W
R74	1-218-692-11	s	CHIP, METAL 1K 0.50% 1/16W
R75	1-218-692-11	s	CHIP, METAL 1K 0.50% 1/16W
R76	1-218-716-11	s	METAL 10K 0.50% 1/16W

(SG-226 BOARD)

Ref. No. or Q'ty	Part No.	SP	Description
R77	1-218-716-11	s	METAL 10K 0.50% 1/16W
R78	1-218-716-11	s	METAL 10K 0.50% 1/16W
R79	1-218-712-11	s	CHIP, METAL 6.8K 0.50% 1/16W
R80	1-218-712-11	s	CHIP, METAL 6.8K 0.50% 1/16W
R81	1-218-712-11	s	CHIP, METAL 6.8K 0.50% 1/16W
R82	1-218-712-11	s	CHIP, METAL 6.8K 0.50% 1/16W
R83	1-218-712-11	s	CHIP, METAL 6.8K 0.50% 1/16W
R84	1-218-712-11	s	CHIP, METAL 6.8K 0.50% 1/16W
R85	1-218-644-11	s	METAL 10 0.50% 1/16W
R86	1-218-644-11	s	METAL 10 0.50% 1/16W
R87	1-218-644-11	s	METAL 10 0.50% 1/16W
R88	1-218-644-11	s	METAL 10 0.50% 1/16W
R89	1-218-644-11	s	METAL 10 0.50% 1/16W
R90	1-218-644-11	s	METAL 10 0.50% 1/16W
R91	1-218-676-11	s	METAL 220 0.50% 1/16W
R92	1-218-676-11	s	METAL 220 0.50% 1/16W
R93	1-218-676-11	s	METAL 220 0.50% 1/16W
R94	1-218-660-91	s	CHIP, METAL 47 0.50% 1/16W
R95	1-218-666-11	s	METAL 82 0.50% 1/16W
R96	1-218-692-11	s	CHIP, METAL 1K 0.50% 1/16W
R97	1-218-692-11	s	CHIP, METAL 1K 0.50% 1/16W
R98	1-218-692-11	s	CHIP, METAL 1K 0.50% 1/16W
R99	1-218-692-11	s	CHIP, METAL 1K 0.50% 1/16W
R100	1-218-723-11	s	METAL 20K 0.50% 1/16W
R101	1-218-723-11	s	METAL 20K 0.50% 1/16W
R102	1-218-668-11	s	CHIP, METAL 100 0.50% 1/16W
R103	1-218-700-11	s	METAL 2.2K 0.50% 1/16W
R104	1-218-700-11	s	METAL 2.2K 0.50% 1/16W
R105	1-218-724-11	s	CHIP, METAL 22K 5% 1/16W
R106	1-218-724-11	s	CHIP, METAL 22K 5% 1/16W
R107	1-218-700-11	s	METAL 2.2K 0.50% 1/16W
R108	1-218-700-11	s	METAL 2.2K 0.50% 1/16W
R109	1-218-736-11	s	METAL 68K 0.50% 1/16W
R110	1-218-736-11	s	METAL 68K 0.50% 1/16W
R111	1-218-652-11	s	CHIP, METAL 22 0.50% 1/16W
R112	1-218-740-11	s	METAL 100K 0.50% 1/16W
R113	1-218-704-11	s	METAL 3.3K 0.50% 1/16W
R114	1-218-716-11	s	METAL 10K 0.50% 1/16W
R115	1-218-644-11	s	METAL 10 0.50% 1/16W
R116	1-218-732-11	s	METAL 47K 0.50% 1/16W
R117	1-218-668-11	s	CHIP, METAL 100 0.50% 1/16W
R118	1-218-712-11	s	CHIP, METAL 6.8K 0.50% 1/16W
R119	1-218-712-11	s	CHIP, METAL 6.8K 0.50% 1/16W
R120	1-218-705-11	s	METAL 3.6K 0.50% 1/16W
R121	1-218-693-11	s	CHIP, METAL 1.1K 0.50% 1/16W
R122	1-218-737-11	s	CHIP, METAL 75K 0.50% 1/16W
R123	1-218-668-11	s	CHIP, METAL 100 0.50% 1/16W
R124	1-218-732-11	s	METAL 47K 0.50% 1/16W
R125	1-218-716-11	s	METAL 10K 0.50% 1/16W
R126	1-218-692-11	s	CHIP, METAL 1K 0.50% 1/16W
R127	1-218-668-11	s	CHIP, METAL 100 0.50% 1/16W
R128	1-218-716-11	s	METAL 10K 0.50% 1/16W
R129	1-218-685-11	s	METAL 510 0.50% 1/16W
R130	1-218-692-11	s	CHIP, METAL 1K 0.50% 1/16W
R131	1-218-704-11	s	METAL 3.3K 0.50% 1/16W
R132	1-218-752-11	s	METAL 330K 0.50% 1/16W
R133	1-218-692-11	s	CHIP, METAL 1K 0.50% 1/16W
R134	1-218-692-11	s	CHIP, METAL 1K 0.50% 1/16W
R135	1-218-699-11	s	CHIP, METAL 2K 0.50% 1/16W

(SG-226 BOARD)

Ref. No. or Q'ty	Part No.	SP	Description
R136	1-218-682-11	s	METAL 390 0.50% 1/16W
R137	1-218-692-11	s	CHIP, METAL 1K 0.50% 1/16W
R138	1-218-697-11	s	METAL 1.6K 0.50% 1/16W
R139	1-218-668-11	s	CHIP, METAL 100 0.50% 1/16W
R140	1-218-723-11	s	METAL 20K 0.50% 1/16W
R141	1-218-723-11	s	METAL 20K 0.50% 1/16W
R142	1-218-714-11	s	METAL 8.2K 0.50% 1/16W
R143	1-218-684-11	s	CHIP, METAL 470 0.50% 1/16W
R144	1-218-708-11	s	METAL 4.7K 0.50% 1/16W
R145	1-218-668-11	s	CHIP, METAL 100 0.50% 1/16W
R146	1-218-708-11	s	METAL 4.7K 0.50% 1/16W
R147	1-218-692-11	s	CHIP, METAL 1K 0.50% 1/16W
R148	1-218-716-11	s	METAL 10K 0.50% 1/16W
R149	1-218-704-11	s	METAL 3.3K 0.50% 1/16W
R150	1-218-728-11	s	METAL 33K 0.50% 1/16W
R151	1-218-700-11	s	METAL 2.2K 0.50% 1/16W
R152	1-218-716-11	s	METAL 10K 0.50% 1/16W
R153	1-218-716-11	s	METAL 10K 0.50% 1/16W
R154	1-218-668-11	s	CHIP, METAL 100 0.50% 1/16W
R155	1-218-727-11	s	METAL 30K 0.50% 1/16W
R156	1-218-740-11	s	METAL 100K 0.50% 1/16W
R157	1-218-716-11	s	METAL 10K 0.50% 1/16W
R158	1-218-716-11	s	METAL 10K 0.50% 1/16W
R159	1-218-668-11	s	CHIP, METAL 100 0.50% 1/16W
R160	1-218-727-11	s	METAL 30K 0.50% 1/16W
R161	1-218-740-11	s	METAL 100K 0.50% 1/16W
R163	1-216-864-11	s	METAL, CHIP 0 5% 1/16W
R164	1-216-864-11	s	METAL, CHIP 0 5% 1/16W
R167	1-216-864-11	s	METAL, CHIP 0 5% 1/16W
R168	1-216-864-11	s	METAL, CHIP 0 5% 1/16W
R173	1-216-864-11	s	METAL, CHIP 0 5% 1/16W
R175	1-216-864-11	s	METAL, CHIP 0 5% 1/16W
R177	1-218-692-11	s	CHIP, METAL 1K 0.50% 1/16W
R178	1-218-702-11	s	CHIP, METAL 2.7K 0.50% 1/16W
R179	1-218-708-11	s	METAL 4.7K 0.50% 1/16W
R180	1-218-692-11	s	CHIP, METAL 1K 0.50% 1/16W
R181	1-218-702-11	s	CHIP, METAL 2.7K 0.50% 1/16W
R182	1-218-708-11	s	METAL 4.7K 0.50% 1/16W
R183	1-218-722-11	s	CHIP, METAL 18K 0.50% 1/16W
R184	1-218-722-11	s	CHIP, METAL 18K 0.50% 1/16W
R185	1-218-722-11	s	CHIP, METAL 18K 0.50% 1/16W
R186	1-218-722-11	s	CHIP, METAL 18K 0.50% 1/16W
R187	1-218-722-11	s	CHIP, METAL 18K 0.50% 1/16W
R188	1-218-722-11	s	CHIP, METAL 18K 0.50% 1/16W
R189	1-218-722-11	s	CHIP, METAL 18K 0.50% 1/16W
R190	1-218-722-11	s	CHIP, METAL 18K 0.50% 1/16W
R191	1-218-668-11	s	CHIP, METAL 100 0.50% 1/16W
R192	1-218-704-11	s	METAL 3.3K 0.50% 1/16W
R193	1-218-694-11	s	CHIP, METAL 1.2K 0.50% 1/16W
R194	1-218-644-11	s	METAL 10 0.50% 1/16W
R195	1-218-745-11	s	CHIP, METAL 160K 0.50% 1/16W
R196	1-218-692-11	s	CHIP, METAL 1K 0.50% 1/16W
R197	1-218-668-11	s	CHIP, METAL 100 0.50% 1/16W
R198	1-218-644-11	s	METAL 10 0.50% 1/16W
R199	1-218-722-11	s	CHIP, METAL 18K 0.50% 1/16W
R200	1-218-722-11	s	CHIP, METAL 18K 0.50% 1/16W
R201	1-218-722-11	s	CHIP, METAL 18K 0.50% 1/16W
R202	1-218-722-11	s	CHIP, METAL 18K 0.50% 1/16W
R203	1-218-722-11	s	CHIP, METAL 18K 0.50% 1/16W

(SG-226 BOARD)

Ref. No. or Q'ty	Part No.	SP	Description
R204	1-218-722-11	s	CHIP, METAL 18K 0.50% 1/16W
R205	1-218-722-11	s	CHIP, METAL 18K 0.50% 1/16W
R206	1-218-722-11	s	CHIP, METAL 18K 0.50% 1/16W
R207	1-218-644-11	s	METAL 10 0.50% 1/16W
R208	1-218-676-11	s	METAL 220 0.50% 1/16W
R209	1-218-704-11	s	METAL 3.3K 0.50% 1/16W
R210	1-218-694-11	s	CHIP, METAL 1.2K 0.50% 1/16W
R211	1-218-745-11	s	CHIP, METAL 160K 0.50% 1/16W
R212	1-218-644-11	s	METAL 10 0.50% 1/16W
R213	1-218-692-11	s	CHIP, METAL 1K 0.50% 1/16W
R214	1-218-675-11	s	CHIP, METAL 200 0.50% 1/16W
R215	1-218-668-11	s	CHIP, METAL 100 0.50% 1/16W
R216	1-218-652-11	s	CHIP, METAL 22 0.50% 1/16W
R217	1-218-676-11	s	METAL 220 0.50% 1/16W
R218	1-218-684-11	s	CHIP, METAL 470 0.50% 1/16W
R219	1-218-668-11	s	CHIP, METAL 100 0.50% 1/16W
R400	1-218-724-11	s	CHIP, METAL 22K 5% 1/16W
R402	1-218-676-11	s	METAL 220 0.50% 1/16W
R403	1-216-864-11	s	METAL, CHIP 0 5% 1/16W
R404	1-216-864-11	s	METAL, CHIP 0 5% 1/16W
R406	1-218-740-11	s	METAL 100K 0.50% 1/16W
R407	1-218-724-11	s	CHIP, METAL 22K 5% 1/16W
R408	1-216-864-11	s	METAL, CHIP 0 5% 1/16W
RB1	1-239-286-11	s	NETWORK RESISTOR (CHIP) 22K
RB2	1-236-907-11	s	RESISTOR BLOCK, CHIP 100KX4
RB3	1-236-907-11	s	RESISTOR BLOCK, CHIP 100KX4
RB6	1-239-286-11	s	NETWORK RESISTOR (CHIP) 22K
RB7	1-239-416-11	s	RESISTOR BLOCK, CHIP 220X4
RB8	1-239-416-11	s	RESISTOR BLOCK, CHIP 220X4
S1	1-572-138-11	s	SWITCH, TACTILE
S2	1-692-271-31	s	SWITCH, SLIDE
X1	1-760-435-11	s	CRYSTAL 18.00MHz
X2	1-577-331-11	s	OSCILLATOR, CRYSTAL 74.25MHz
X3	1-577-332-11	s	OSCILLATOR, CRYSTAL 74.175750MHz

SW-687 BOARD

Ref. No. or Q'ty	Part No.	SP	Description
1pc	1-660-234-11	o	PRINTED CIRCUIT BOARD, SW-687
CN1	1-764-080-21	s	PIN, CONNECTOR (PC BOARD) 8P
RV1	1-223-686-11	s	RES, VAR, CARBON 5K/5K
S1	1-571-416-11	s	SWITCH, TOGGLE
S2	1-571-679-11	s	SWITCH, TOGGLE
S3	1-570-282-21	s	SWITCH, KEY BOARD

SW-688 BOARD

Ref. No. or Q'ty	Part No.	SP	Description
1pc	A-8273-239-A	o	MOUNTED CIRCUIT BOARD, SW-688
C1	1-164-156-11	s	CERAMIC 0.1uF 25V
C2	1-104-851-11	s	TANTALUM, CHIP 10uF 20% 10V
CN1	1-764-080-21	s	PIN, CONNECTOR (PC BOARD) 8P
CN2	1-764-079-21	s	PIN, CONNECTOR (PC BOARD) 4P
CN3	1-764-078-11	s	PIN, CONNECTOR (PC BOARD) 3P
CN4	1-764-087-21	s	PIN, CONNECTOR (PC BOARD) 14P
CN5	1-695-480-11	o	PIN, CONNECTOR (PC BOARD) 2P
IC1	8-759-175-04	s	IC PCF8574T-T
IC2	8-759-175-04	s	IC PCF8574T-T
R1	1-218-692-11	s	CHIP, METAL 1K 0.50% 1/16W
R2	1-218-692-11	s	CHIP, METAL 1K 0.50% 1/16W
R3	1-218-692-11	s	CHIP, METAL 1K 0.50% 1/16W
R4	1-218-692-11	s	CHIP, METAL 1K 0.50% 1/16W
R5	1-218-692-11	s	CHIP, METAL 1K 0.50% 1/16W
R6	1-218-668-11	s	CHIP, METAL 100 0.50% 1/16W
R7	1-218-668-11	s	CHIP, METAL 100 0.50% 1/16W
R8	1-218-692-11	s	CHIP, METAL 1K 0.50% 1/16W
R9	1-218-692-11	s	CHIP, METAL 1K 0.50% 1/16W
R10	1-218-692-11	s	CHIP, METAL 1K 0.50% 1/16W
R11	1-218-692-11	s	CHIP, METAL 1K 0.50% 1/16W
R12	1-218-692-11	s	CHIP, METAL 1K 0.50% 1/16W
R13	1-218-692-11	s	CHIP, METAL 1K 0.50% 1/16W
R14	1-218-692-11	s	CHIP, METAL 1K 0.50% 1/16W
R15	1-218-692-11	s	CHIP, METAL 1K 0.50% 1/16W
R16	1-218-668-11	s	CHIP, METAL 100 0.50% 1/16W
R17	1-218-668-11	s	CHIP, METAL 100 0.50% 1/16W
R18	1-218-740-11	s	METAL 100K 0.50% 1/16W
R19	1-218-740-11	s	METAL 100K 0.50% 1/16W
S1	1-571-415-11	s	SWITCH, TOGGLE
S2	1-571-415-11	s	SWITCH, TOGGLE
S3	1-571-415-11	s	SWITCH, TOGGLE
S4	1-571-415-11	s	SWITCH, TOGGLE

SW-689 BOARD

Ref. No. or Q'ty	Part No.	SP	Description
1pc	1-660-236-11	o	PRINTED CIRCUIT BOARD, SW-689
CN1	1-764-079-21	s	PIN, CONNECTOR (PC BOARD) 4P
S1	1-473-315-11	s	ENCODER, ROTARY

SW-690 BOARD

Ref. No. or Q'ty	Part No.	SP	Description
1pc	A-8273-157-A	o	MOUNTED CIRCUIT BOARD, SW-690
4pcs	7-623-927-11	s	WASHER 6.0, NYLON
C1	1-104-823-11	s	TANTALUM, CHIP 47uF 20% 16V
C2	1-104-823-11	s	TANTALUM, CHIP 47uF 20% 16V
C3	1-104-914-11	s	TANTAL 22uF 20% 16V
CN1	1-764-091-11	o	PIN, CONNECTOR (PC BOARD) 6P
CN2	1-764-097-11	o	PIN, CONNECTOR (PC BOARD) 12P
D1	8-719-059-52	s	DIODE MA3J14300LSO
D2	8-719-059-52	s	DIODE MA3J14300LSO
D3	8-719-059-52	s	DIODE MA3J14300LSO
IC1	8-759-175-04	s	IC PCF8574T-T
Q1	8-729-820-90	s	TRANSISTOR 2SD1621-ST
R1	1-216-627-11	s	CHIP, METAL 100 0.50% 1/10W
R2	1-216-627-11	s	CHIP, METAL 100 0.50% 1/10W
R3	1-216-687-11	s	METAL, CHIP 33K 0.5% 1/10W
R4	1-216-687-11	s	METAL, CHIP 33K 0.5% 1/10W
R7	1-216-687-11	s	METAL, CHIP 33K 0.5% 1/10W
R8	1-216-687-11	s	METAL, CHIP 33K 0.5% 1/10W
R9	1-216-687-11	s	METAL, CHIP 33K 0.5% 1/10W
R10	1-216-687-11	s	METAL, CHIP 33K 0.5% 1/10W
R11	1-216-627-11	s	CHIP, METAL 100 0.50% 1/10W
R12	1-216-627-11	s	CHIP, METAL 100 0.50% 1/10W
R13	1-216-699-11	s	CHIP, METAL 100K 0.50% 1/10W
R14	1-216-699-11	s	CHIP, METAL 100K 0.50% 1/10W
R15	1-218-756-11	s	METAL 150K 0.50% 1/10W
R16	1-216-675-11	s	METAL, CHIP 10K 0.5% 1/10W
R17	1-216-627-11	s	CHIP, METAL 100 0.50% 1/10W
R18	1-216-627-11	s	CHIP, METAL 100 0.50% 1/10W
RV1	1-238-296-11	s	CARBON, VAR 10K
RV2	1-238-296-11	s	CARBON, VAR 10K
RV3	1-238-296-11	s	CARBON, VAR 10K
RV4	1-238-296-11	s	CARBON, VAR 10K
S1	1-570-984-11	s	SWITCH, TOGGLE
S2	1-570-984-11	s	SWITCH, TOGGLE
S5	1-570-282-21	s	SWITCH, KEY BOARD

SW-696 BOARD

Ref. No. or Q'ty	Part No.	SP	Description
1pc	1-660-237-11	o	PRINTED CIRCUIT BOARD, SW-696
CN1	1-764-078-11	s	PIN, CONNECTOR (PC BOARD) 3P
S1	1-554-088-00	s	SWITCH, TACTILE

SW-706 BOARD

Ref. No. or Q'ty	Part No.	SP	Description
1pc	A-8314-068-A	o	MOUNTED CIRCUIT BOARD, SW-706
C2	1-163-275-11	s	CERAMIC 0.001uF 5% 50V
C3	1-163-275-11	s	CERAMIC 0.001uF 5% 50V
C4	1-163-275-11	s	CERAMIC 0.001uF 5% 50V
C5	1-163-275-11	s	CERAMIC 0.001uF 5% 50V
C6	1-163-275-11	s	CERAMIC 0.001uF 5% 50V
C7	1-163-275-11	s	CERAMIC 0.001uF 5% 50V
C8	1-163-275-11	s	CERAMIC 0.001uF 5% 50V
C9	1-163-275-11	s	CERAMIC 0.001uF 5% 50V
C10	1-163-275-11	s	CERAMIC 0.001uF 5% 50V
C11	1-163-275-11	s	CERAMIC 0.001uF 5% 50V
C12	1-163-275-11	s	CERAMIC 0.001uF 5% 50V
C13	1-163-275-11	s	CERAMIC 0.001uF 5% 50V
C14	1-163-275-11	s	CERAMIC 0.001uF 5% 50V
C15	1-163-275-11	s	CERAMIC 0.001uF 5% 50V
C16	1-163-275-11	s	CERAMIC 0.001uF 5% 50V
C17	1-163-275-11	s	CERAMIC 0.001uF 5% 50V
C18	1-163-275-11	s	CERAMIC 0.001uF 5% 50V
C19	1-163-275-11	s	CERAMIC 0.001uF 5% 50V
C20	1-163-275-11	s	CERAMIC 0.001uF 5% 50V
CN46	1-580-544-11	s	PIN, CONNECTOR 30P
CN61	1-506-475-11	o	PIN, CONNECTOR 10P
CN62	1-506-475-11	o	PIN, CONNECTOR 10P
RV1	1-223-742-11	s	RES, VAR METAL CARBON 50K
RV2	1-223-742-11	s	RES, VAR METAL CARBON 50K
RV3	1-223-742-11	s	RES, VAR METAL CARBON 50K
RV4	1-223-742-11	s	RES, VAR METAL CARBON 50K
S1	1-762-122-11	s	SWITCH, TOGGLE
S2	1-762-122-11	s	SWITCH, TOGGLE
S3	1-762-122-11	s	SWITCH, TOGGLE
S4	1-762-122-11	s	SWITCH, TOGGLE

SW-806 BOARD

Ref. No. or Q'ty	Part No.	SP	Description
1pc	1-660-233-11	o	PRINTED CIRCUIT BOARD, SW-806
C1	1-104-851-11	s	TANTALUM, CHIP 10uF 20% 10V
CN1	1-695-207-21	o	PIN, CONNECTOR (PC BOARD) 6P
IC1	8-759-175-04	s	IC PCF8574T-T
R1	1-218-692-11	s	CHIP, METAL 1K 0.50% 1/16W
R2	1-218-692-11	s	CHIP, METAL 1K 0.50% 1/16W
R3	1-218-692-11	s	CHIP, METAL 1K 0.50% 1/16W
R4	1-218-692-11	s	CHIP, METAL 1K 0.50% 1/16W
R5	1-218-692-11	s	CHIP, METAL 1K 0.50% 1/16W
R6	1-218-692-11	s	CHIP, METAL 1K 0.50% 1/16W
R7	1-218-668-11	s	CHIP, METAL 100 0.50% 1/16W
R8	1-218-668-11	s	CHIP, METAL 100 0.50% 1/16W
R9	1-218-740-11	s	METAL 100K 0.50% 1/16W
R10	1-218-740-11	s	METAL 100K 0.50% 1/16W
S1	1-570-985-11	s	SWITCH, TOGGLE
S2	1-570-985-11	s	SWITCH, TOGGLE
S3	1-571-396-11	s	SWITCH, TOGGLE

http://getMANUAL.com

SW-824 BOARD

Ref. No. or Q'ty	Part No.	SP	Description
1pc	A-8273-174-A	o	MOUNTED CIRCUIT BOARD, SW-824
1pc	3-708-930-01	s	CAP
1pc	3-708-930-11	s	CAP
1pc	3-708-930-21	s	CAP
1pc	3-708-932-01	s	CAP
1pc	3-708-933-01	s	CAP
1pc	3-708-933-11	s	CAP
1pc	3-708-934-01	s	CAP
1pc	3-710-803-03	o	HOLDER, DIA. 5-9 LED
2pcs	7-622-205-05	s	NUT M2 TYPE2
2pcs	7-627-553-67	s	SCREW,PRECISION +P 2X5
C1	1-135-212-21	s	TANTALUM, CHIP 2.2uF 20% 35V
C2	1-104-851-11	s	TANTALUM, CHIP 10uF 20% 10V
C3	1-104-851-11	s	TANTALUM, CHIP 10uF 20% 10V
C4	1-104-851-11	s	TANTALUM, CHIP 10uF 20% 10V
C5	1-163-038-00	s	CHIP, CERAMIC 0.1uF 25V
C6	1-163-038-00	s	CHIP, CERAMIC 0.1uF 25V
C7	1-104-851-11	s	TANTALUM, CHIP 10uF 20% 10V
C8	1-163-038-00	s	CHIP, CERAMIC 0.1uF 25V
C9	1-107-690-11	s	TANTALUM 6.8uF 20% 35V
C10	1-104-851-11	s	TANTALUM, CHIP 10uF 20% 10V
CN1	1-695-452-11	o	CONNECTOR, BOARD TO BOARD 50P
D1	8-719-946-89	s	DIODE GL5ED5
D2	8-719-801-78	s	DIODE 1SS184
D3	8-719-104-34	s	DIODE 1S2836
D4	8-719-104-34	s	DIODE 1S2836
D5	8-719-104-34	s	DIODE 1S2836
D6	8-719-104-34	s	DIODE 1S2836
D7	8-719-104-34	s	DIODE 1S2836
D8	8-719-104-34	s	DIODE 1S2836
D9	8-719-104-34	s	DIODE 1S2836
D10	8-719-104-34	s	DIODE 1S2836
D11	8-719-104-34	s	DIODE 1S2836
D12	8-719-104-34	s	DIODE 1S2836
D13	8-719-104-34	s	DIODE 1S2836
D14	8-719-104-34	s	DIODE 1S2836
D15	8-719-104-34	s	DIODE 1S2836
D16	8-719-104-34	s	DIODE 1S2836
D17	8-719-104-34	s	DIODE 1S2836
D18	8-719-104-34	s	DIODE 1S2836
D19	8-719-104-34	s	DIODE 1S2836
D20	8-719-104-34	s	DIODE 1S2836
D21	8-719-032-78	s	DIODE GL3UR8
D22	8-719-032-78	s	DIODE GL3UR8
D23	8-719-032-78	s	DIODE GL3UR8
D24	8-719-032-78	s	DIODE GL3UR8
D25	8-719-032-78	s	DIODE GL3UR8
D26	8-719-032-78	s	DIODE GL3UR8
D27	8-719-032-78	s	DIODE GL3UR8
D28	8-719-032-78	s	DIODE GL3UR8
D29	8-719-032-78	s	DIODE GL3UR8
D30	8-719-032-78	s	DIODE GL3UR8
D31	8-719-032-78	s	DIODE GL3UR8
D32	8-719-032-78	s	DIODE GL3UR8
IC1	8-759-926-66	s	IC SN74HC373ANS
IC2	8-759-926-66	s	IC SN74HC373ANS
IC3	8-759-983-69	s	IC LM358PS

(SW-824 BOARD)

Ref. No. or Q'ty	Part No.	SP	Description
Q1	8-729-027-57	s	TRANSISTOR DTC143XKA-T146
Q2	8-729-027-57	s	TRANSISTOR DTC143XKA-T146
Q3	8-729-027-57	s	TRANSISTOR DTC143XKA-T146
Q4	8-729-027-57	s	TRANSISTOR DTC143XKA-T146
Q5	8-729-027-57	s	TRANSISTOR DTC143XKA-T146
Q6	8-729-027-57	s	TRANSISTOR DTC143XKA-T146
Q7	8-729-027-57	s	TRANSISTOR DTC143XKA-T146
Q8	8-729-807-51	s	TRANSISTOR 2SD1623-S
Q9	8-729-027-57	s	TRANSISTOR DTC143XKA-T146
Q10	8-729-807-51	s	TRANSISTOR 2SD1623-S
R1	1-216-659-11	s	METAL, CHIP 2.2K 0.5% 1/10W
R2	1-216-643-11	s	METAL, CHIP 470 0.5% 1/10W
R3	1-216-633-11	s	CHIP, METAL 180 0.50% 1/10W
R4	1-216-633-11	s	CHIP, METAL 180 0.50% 1/10W
R5	1-216-633-11	s	CHIP, METAL 180 0.50% 1/10W
R6	1-216-633-11	s	CHIP, METAL 180 0.50% 1/10W
R7	1-216-633-11	s	CHIP, METAL 180 0.50% 1/10W
R8	1-216-637-11	s	METAL, CHIP 270 0.5% 1/10W
R9	1-216-675-11	s	METAL, CHIP 10K 0.5% 1/10W
R10	1-216-637-11	s	METAL, CHIP 270 0.5% 1/10W
R11	1-218-621-11	s	CHIP, METAL 39 5% 1W
R12	1-216-629-11	s	CHIP, METAL 120 0.50% 1/10W
R13	1-216-298-00	s	CHIP, METAL 2.2 5% 1/10W
R15	1-216-627-11	s	CHIP, METAL 100 0.50% 1/10W
R17	1-216-691-11	s	CHIP, METAL 47K 0.50% 1/10W
R18	1-216-295-11	s	CHIP, CONDUCTOR 0
R19	1-218-621-11	s	CHIP, METAL 39 5% 1W
RV1	1-223-741-11	s	RES, VAR METAL CARBON 50K
RV2	1-223-741-11	s	RES, VAR METAL CARBON 50K
RV3	1-223-741-11	s	RES, VAR METAL CARBON 50K
RV4	1-223-741-11	s	RES, VAR METAL CARBON 50K
S1	1-473-435-11	s	ENCODER, ROTARY
S2	1-762-121-11	s	SWITCH, ROTARY
S3	1-762-121-11	s	SWITCH, ROTARY
S4	1-762-122-11	s	SWITCH, TOGGLE
S5	1-762-122-11	s	SWITCH, TOGGLE
S6	1-762-122-11	s	SWITCH, TOGGLE
S7	1-762-122-11	s	SWITCH, TOGGLE
S8	1-762-123-11	s	SWITCH, TOGGLE
S9	1-762-531-11	s	SWITCH, TOGGLE
S10	1-762-129-11	s	SWITCH, PUSH
S11	1-762-129-21	s	SWITCH, PUSH
S12	1-762-129-31	s	SWITCH, PUSH
S13	1-762-131-11	s	SWITCH, PUSH
S14	1-762-132-11	s	SWITCH, PUSH
S15	1-762-533-11	s	SWITCH, PUSH (2 KEY)
S19	1-762-534-11	s	SWITCH, PUSH (3 KEY)
S22	1-762-123-11	s	SWITCH, TOGGLE
S23	1-762-132-21	s	SWITCH, PUSH
S24	1-762-133-11	s	SWITCH, PUSH

VA-158 BOARD

Ref. No. or Q'ty	Part No.	SP	Description
1pc	A-8273-215-A	o	MOUNTED CIRCUIT BOARD, VA-158
1pc	3-602-406-01	o	PANEL,VA-158 PC BOARD
1pc	3-724-753-01	o	RING
5pcs	3-729-061-01	s	SCREW (M2X4.5) (TYPE 1)
C3	1-164-156-11	s	CERAMIC 0.1uF 25V
C5	1-162-963-11	s	CERAMIC, CHIP 680PF 10% 50V
C6	1-162-963-11	s	CERAMIC, CHIP 680PF 10% 50V
C7	1-164-156-11	s	CERAMIC 0.1uF 25V
C8	1-164-156-11	s	CERAMIC 0.1uF 25V
C9	1-164-156-11	s	CERAMIC 0.1uF 25V
C10	1-164-156-11	s	CERAMIC 0.1uF 25V
C11	1-164-156-11	s	CERAMIC 0.1uF 25V
C12	1-164-156-11	s	CERAMIC 0.1uF 25V
C13	1-113-642-11	s	TANTALUM, CHIP 47uF 10% 10V
C14	1-113-642-11	s	TANTALUM, CHIP 47uF 10% 10V
C15	1-164-156-11	s	CERAMIC 0.1uF 25V
C16	1-164-156-11	s	CERAMIC 0.1uF 25V
C17	1-164-315-11	s	CERAMIC 470PF 5% 50V
C18	1-164-315-11	s	CERAMIC 470PF 5% 50V
C19	1-162-963-11	s	CERAMIC, CHIP 680PF 10% 50V
C20	1-162-963-11	s	CERAMIC, CHIP 680PF 10% 50V
C21	1-164-156-11	s	CERAMIC 0.1uF 25V
C22	1-164-156-11	s	CERAMIC 0.1uF 25V
C23	1-164-156-11	s	CERAMIC 0.1uF 25V
C24	1-162-970-11	s	CERAMIC, CHIP 0.01uF 10% 25V
C25	1-164-315-11	s	CERAMIC 470PF 5% 50V
C26	1-164-156-11	s	CERAMIC 0.1uF 25V
C27	1-164-315-11	s	CERAMIC 470PF 5% 50V
C28	1-164-156-11	s	CERAMIC 0.1uF 25V
C29	1-135-177-21	s	TANTALUM, CHIP 1uF 10% 25V
C30	1-164-156-11	s	CERAMIC 0.1uF 25V
C31	1-107-689-21	s	TANTAL 1uF 20% 35V
C32	1-162-963-11	s	CERAMIC, CHIP 680PF 10% 50V
C33	1-162-963-11	s	CERAMIC, CHIP 680PF 10% 50V
C34	1-164-156-11	s	CERAMIC 0.1uF 25V
C35	1-164-156-11	s	CERAMIC 0.1uF 25V
C36	1-162-970-11	s	CERAMIC, CHIP 0.01uF 10% 25V
C37	1-164-315-11	s	CERAMIC 470PF 5% 50V
C38	1-164-315-11	s	CERAMIC 470PF 5% 50V
C39	1-104-852-11	s	TANTALUM, CHIP 22uF 20% 10V
C40	1-162-963-11	s	CERAMIC, CHIP 680PF 10% 50V
C41	1-104-852-11	s	TANTALUM, CHIP 22uF 20% 10V
C42	1-164-156-11	s	CERAMIC 0.1uF 25V
C43	1-164-156-11	s	CERAMIC 0.1uF 25V
C44	1-162-963-11	s	CERAMIC, CHIP 680PF 10% 50V
C45	1-164-156-11	s	CERAMIC 0.1uF 25V
C46	1-164-156-11	s	CERAMIC 0.1uF 25V
C47	1-162-963-11	s	CERAMIC, CHIP 680PF 10% 50V
C48	1-104-852-11	s	TANTALUM, CHIP 22uF 20% 10V
C49	1-104-852-11	s	TANTALUM, CHIP 22uF 20% 10V
C50	1-104-852-11	s	TANTALUM, CHIP 22uF 20% 10V
C51	1-104-852-11	s	TANTALUM, CHIP 22uF 20% 10V
C52	1-104-852-11	s	TANTALUM, CHIP 22uF 20% 10V
C53	1-104-852-11	s	TANTALUM, CHIP 22uF 20% 10V
C54	1-162-963-11	s	CERAMIC, CHIP 680PF 10% 50V
C55	1-164-156-11	s	CERAMIC 0.1uF 25V
C56	1-164-156-11	s	CERAMIC 0.1uF 25V
C57	1-164-156-11	s	CERAMIC 0.1uF 25V
C58	1-164-156-11	s	CERAMIC 0.1uF 25V

(VA-158 BOARD)

Ref. No. or Q'ty	Part No.	SP	Description
C59	1-162-963-11	s	CERAMIC, CHIP 680PF 10% 50V
C60	1-164-156-11	s	CERAMIC 0.1uF 25V
C61	1-164-156-11	s	CERAMIC 0.1uF 25V
C62	1-162-963-11	s	CERAMIC, CHIP 680PF 10% 50V
C63	1-104-851-11	s	TANTALUM, CHIP 10uF 20% 10V
C64	1-104-851-11	s	TANTALUM, CHIP 10uF 20% 10V
C65	1-162-970-11	s	CERAMIC, CHIP 0.01uF 10% 25V
C66	1-164-156-11	s	CERAMIC 0.1uF 25V
C67	1-104-851-11	s	TANTALUM, CHIP 10uF 20% 10V
C68	1-164-363-11	s	CERAMIC 560PF 5% 50V
C69	1-164-156-11	s	CERAMIC 0.1uF 25V
C70	1-135-208-11	s	TANTAL 1uF 20% 10V
C71	1-162-915-11	s	CERAMIC, CHIP 10PF 5PF 50V
C72	1-162-905-11	s	CERAMIC 1PF 0.25PF 50V
C73	1-162-927-11	s	CERAMIC, CHIP 100PF 5% 50V
C74	1-162-927-11	s	CERAMIC, CHIP 100PF 5% 50V
C75	1-104-915-11	s	CHIP, TANTALUM 2.2uF 20% 20V
C76	1-135-177-21	s	TANTALUM, CHIP 1uF 10% 25V
C300	1-107-689-21	s	TANTAL 1uF 20% 35V
C301	1-162-970-11	s	CERAMIC, CHIP 0.01uF 10% 25V
C302	1-162-905-11	s	CERAMIC 1PF 0.25PF 50V
C303	1-162-970-11	s	CERAMIC, CHIP 0.01uF 10% 25V
C304	1-162-927-11	s	CERAMIC, CHIP 100PF 5% 50V
C305	1-113-682-11	s	TANTALUM, CHIP 33uF 20% 10V
C306	1-113-682-11	s	TANTALUM, CHIP 33uF 20% 10V
C307	1-104-851-11	s	TANTALUM, CHIP 10uF 20% 10V
C308	1-104-851-11	s	TANTALUM, CHIP 10uF 20% 10V
C309	1-162-970-11	s	CERAMIC, CHIP 0.01uF 10% 25V
C310	1-162-915-11	s	CERAMIC, CHIP 10PF 5PF 50V
C311	1-164-156-11	s	CERAMIC 0.1uF 25V
C312	1-164-156-11	s	CERAMIC 0.1uF 25V
C313	1-164-156-11	s	CERAMIC 0.1uF 25V
C314	1-164-156-11	s	CERAMIC 0.1uF 25V
C316	1-162-927-11	s	CERAMIC, CHIP 100PF 5% 50V
C317	1-104-851-11	s	TANTALUM, CHIP 10uF 20% 10V
C318	1-104-851-11	s	TANTALUM, CHIP 10uF 20% 10V
C319	1-162-970-11	s	CERAMIC, CHIP 0.01uF 10% 25V
C320	1-104-851-11	s	TANTALUM, CHIP 10uF 20% 10V
C321	1-104-851-11	s	TANTALUM, CHIP 10uF 20% 10V
C322	1-164-156-11	s	CERAMIC 0.1uF 25V
C323	1-104-852-11	s	TANTALUM, CHIP 22uF 20% 10V
C324	1-162-915-11	s	CERAMIC, CHIP 10PF 5PF 50V
C325	1-162-970-11	s	CERAMIC, CHIP 0.01uF 10% 25V
C326	1-135-210-11	s	TANTALUM 4.7uF 10% 10V
C327	1-104-851-11	s	TANTALUM, CHIP 10uF 20% 10V
C328	1-104-851-11	s	TANTALUM, CHIP 10uF 20% 10V
C329	1-135-210-11	s	TANTALUM 4.7uF 10% 10V
C330	1-104-851-11	s	TANTALUM, CHIP 10uF 20% 10V
C331	1-135-210-11	s	TANTALUM 4.7uF 10% 10V
C332	1-162-905-11	s	CERAMIC 1PF 0.25PF 50V
C333	1-164-156-11	s	CERAMIC 0.1uF 25V
C334	1-164-156-11	s	CERAMIC 0.1uF 25V
C335	1-162-927-11	s	CERAMIC, CHIP 100PF 5% 50V
C336	1-162-915-11	s	CERAMIC, CHIP 10PF 5PF 50V
C337	1-104-851-11	s	TANTALUM, CHIP 10uF 20% 10V
C500	1-107-689-21	s	TANTAL 1uF 20% 35V
C501	1-162-970-11	s	CERAMIC, CHIP 0.01uF 10% 25V
C502	1-162-905-11	s	CERAMIC 1PF 0.25PF 50V
C503	1-162-970-11	s	CERAMIC, CHIP 0.01uF 10% 25V

(VA-158 BOARD)

Ref. No. or Q'ty	Part No.	SP	Description
C504	1-162-927-11	s	CERAMIC, CHIP 100PF 5% 50V
C505	1-113-682-11	s	TANTALUM, CHIP 33uF 20% 10V
C506	1-113-682-11	s	TANTALUM, CHIP 33uF 20% 10V
C507	1-104-851-11	s	TANTALUM, CHIP 10uF 20% 10V
C508	1-104-851-11	s	TANTALUM, CHIP 10uF 20% 10V
C509	1-162-970-11	s	CERAMIC, CHIP 0.01uF 10% 25V
C510	1-162-915-11	s	CERAMIC, CHIP 10PF 5PF 50V
C513	1-164-156-11	s	CERAMIC 0.1uF 25V
C514	1-164-156-11	s	CERAMIC 0.1uF 25V
C516	1-162-927-11	s	CERAMIC, CHIP 100PF 5% 50V
C517	1-104-851-11	s	TANTALUM, CHIP 10uF 20% 10V
C518	1-104-851-11	s	TANTALUM, CHIP 10uF 20% 10V
C519	1-162-970-11	s	CERAMIC, CHIP 0.01uF 10% 25V
C520	1-104-851-11	s	TANTALUM, CHIP 10uF 20% 10V
C521	1-104-851-11	s	TANTALUM, CHIP 10uF 20% 10V
C522	1-164-156-11	s	CERAMIC 0.1uF 25V
C523	1-104-852-11	s	TANTALUM, CHIP 22uF 20% 10V
C524	1-162-915-11	s	CERAMIC, CHIP 10PF 5PF 50V
C525	1-162-970-11	s	CERAMIC, CHIP 0.01uF 10% 25V
C526	1-135-210-11	s	TANTALUM 4.7uF 10% 10V
C527	1-104-851-11	s	TANTALUM, CHIP 10uF 20% 10V
C528	1-104-851-11	s	TANTALUM, CHIP 10uF 20% 10V
C529	1-135-210-11	s	TANTALUM 4.7uF 10% 10V
C530	1-104-851-11	s	TANTALUM, CHIP 10uF 20% 10V
C531	1-135-210-11	s	TANTALUM 4.7uF 10% 10V
C532	1-162-905-11	s	CERAMIC 1PF 0.25PF 50V
C533	1-164-156-11	s	CERAMIC 0.1uF 25V
C534	1-164-156-11	s	CERAMIC 0.1uF 25V
C535	1-162-927-11	s	CERAMIC, CHIP 100PF 5% 50V
C536	1-162-915-11	s	CERAMIC, CHIP 10PF 5PF 50V
C537	1-104-851-11	s	TANTALUM, CHIP 10uF 20% 10V
C700	1-107-689-21	s	TANTAL 1uF 20% 35V
C701	1-162-970-11	s	CERAMIC, CHIP 0.01uF 10% 25V
C702	1-162-905-11	s	CERAMIC 1PF 0.25PF 50V
C703	1-162-970-11	s	CERAMIC, CHIP 0.01uF 10% 25V
C704	1-162-927-11	s	CERAMIC, CHIP 100PF 5% 50V
C705	1-113-682-11	s	TANTALUM, CHIP 33uF 20% 10V
C706	1-113-682-11	s	TANTALUM, CHIP 33uF 20% 10V
C707	1-104-851-11	s	TANTALUM, CHIP 10uF 20% 10V
C708	1-104-851-11	s	TANTALUM, CHIP 10uF 20% 10V
C709	1-162-970-11	s	CERAMIC, CHIP 0.01uF 10% 25V
C710	1-162-915-11	s	CERAMIC, CHIP 10PF 5PF 50V
C711	1-164-156-11	s	CERAMIC 0.1uF 25V
C712	1-164-156-11	s	CERAMIC 0.1uF 25V
C713	1-164-156-11	s	CERAMIC 0.1uF 25V
C714	1-164-156-11	s	CERAMIC 0.1uF 25V
C716	1-162-927-11	s	CERAMIC, CHIP 100PF 5% 50V
C717	1-104-851-11	s	TANTALUM, CHIP 10uF 20% 10V
C718	1-104-851-11	s	TANTALUM, CHIP 10uF 20% 10V
C719	1-162-970-11	s	CERAMIC, CHIP 0.01uF 10% 25V
C720	1-104-851-11	s	TANTALUM, CHIP 10uF 20% 10V
C721	1-104-851-11	s	TANTALUM, CHIP 10uF 20% 10V
C722	1-164-156-11	s	CERAMIC 0.1uF 25V
C723	1-104-852-11	s	TANTALUM, CHIP 22uF 20% 10V
C724	1-162-915-11	s	CERAMIC, CHIP 10PF 5PF 50V
C725	1-162-970-11	s	CERAMIC, CHIP 0.01uF 10% 25V
C726	1-135-210-11	s	TANTALUM 4.7uF 10% 10V
C727	1-104-851-11	s	TANTALUM, CHIP 10uF 20% 10V
C728	1-104-851-11	s	TANTALUM, CHIP 10uF 20% 10V

(VA-158 BOARD)

Ref. No. or Q'ty	Part No.	SP	Description
C729	1-135-210-11	s	TANTALUM 4.7uF 10% 10V
C730	1-104-851-11	s	TANTALUM, CHIP 10uF 20% 10V
C731	1-135-210-11	s	TANTALUM 4.7uF 10% 10V
C732	1-162-905-11	s	CERAMIC 1PF 0.25PF 50V
C733	1-164-156-11	s	CERAMIC 0.1uF 25V
C734	1-164-156-11	s	CERAMIC 0.1uF 25V
C735	1-162-927-11	s	CERAMIC, CHIP 100PF 5% 50V
C736	1-162-915-11	s	CERAMIC, CHIP 10PF 5PF 50V
C737	1-104-851-11	s	TANTALUM, CHIP 10uF 20% 10V
C738	1-162-923-11	s	CERAMIC, CHIP 47PF 5% 50V
CN1	1-695-453-11	s	CONNECTOR, BOARD TO BOARD 50P
D1	8-719-059-52	s	DIODE MA3J14300LSO
FL300	1-233-943-11	s	FILTER, LOW PASS
FL301	1-416-347-11	s	DELAY LINE
FL500	1-233-943-11	s	FILTER, LOW PASS
FL501	1-416-347-11	s	DELAY LINE
FL700	1-233-943-11	s	FILTER, LOW PASS
FL701	1-416-347-11	s	DELAY LINE
IC1	8-759-066-59	s	IC TC74HC4053AFS
IC2	8-759-185-42	s	IC LM4040AIM3-2.5
IC3	8-759-195-81	s	IC TC7S86FU
IC4	8-759-195-81	s	IC TC7S86FU
IC5	8-759-173-16	s	IC TL062CPW
IC6	8-759-076-06	s	IC TL064CPW
IC7	8-759-066-59	s	IC TC74HC4053AFS
IC8	8-759-076-06	s	IC TL064CPW
IC9	8-759-066-59	s	IC TC74HC4053AFS
IC10	8-759-076-06	s	IC TL064CPW
IC11	8-759-076-06	s	IC TL064CPW
IC12	8-759-064-36	s	IC MB88346BPFV
IC13	8-759-064-36	s	IC MB88346BPFV
IC14	8-759-076-06	s	IC TL064CPW
IC15	8-759-066-59	s	IC TC74HC4053AFS
IC16	8-759-064-36	s	IC MB88346BPFV
IC17	8-759-064-36	s	IC MB88346BPFV
IC18	8-759-076-06	s	IC TL064CPW
IC19	8-759-066-59	s	IC TC74HC4053AFS
IC20	8-759-287-54	s	IC TL084CPW-E20
IC21	8-759-287-54	s	IC TL084CPW-E20
IC22	8-759-058-54	s	IC TC7S00FU(TE85R)
IC23	8-759-058-54	s	IC TC7S00FU(TE85R)
IC24	8-759-066-59	s	IC TC74HC4053AFS
IC25	8-759-066-59	s	IC TC74HC4053AFS
IC26	8-759-082-60	s	IC TC7S66FU
IC27	8-759-349-47	s	IC TLC393CPW-E05
IC28	8-759-058-55	s	IC TC7S02FU-TE85L
IC29	8-759-086-41	s	IC X24C02S-3.0
IC30	8-759-066-59	s	IC TC74HC4053AFS
IC31	8-759-195-81	s	IC TC7S86FU
IC32	8-759-058-58	s	IC TC7S04FU(TE85R)
IC33	8-759-054-61	s	IC CLC505AJÈ
IC34	8-759-054-61	s	IC CLC505AJE
IC35	8-759-058-62	s	IC TC7S08FU(TE85R)
IC36	8-759-064-36	s	IC MB88346BPFV
IC37	8-759-059-50	s	IC MB88351PFV
IC38	8-759-058-62	s	IC TC7S08FU(TE85R)
IC39	8-759-058-62	s	IC TC7S08FU(TE85R)
IC40	8-759-058-62	s	IC TC7S08FU(TE85R)

(VA-158 BOARD)

Ref. No. or Q'ty	Part No.	SP	Description
IC41	8-759-058-62	s	IC TC7S08FU(TE85R)
IC42	8-759-058-62	s	IC TC7S08FU(TE85R)
IC43	8-759-147-84	s	IC CXD8072Q
IC300	8-759-054-61	s	IC CLC505AJE
IC301	8-759-066-59	s	IC TC74HC4053AFS
IC302	8-759-173-16	s	IC TL062CPW
IC303	8-759-058-58	s	IC TC7S04FU(TE85R)
IC304	8-759-058-58	s	IC TC7S04FU(TE85R)
IC305	8-759-054-61	s	IC CLC505AJE
IC306	8-759-173-16	s	IC TL062CPW
IC307	8-759-058-54	s	IC TC7S00FU(TE85R)
IC308	8-752-052-73	s	IC CXA1451M
IC309	8-759-485-84	s	IC MC1495DR2
IC310	8-759-054-61	s	IC CLC505AJE
IC500	8-759-054-61	s	IC CLC505AJE
IC501	8-759-066-59	s	IC TC74HC4053AFS
IC502	8-759-173-16	s	IC TL062CPW
IC503	8-759-058-58	s	IC TC7S04FU(TE85R)
IC505	8-759-054-61	s	IC CLC505AJE
IC506	8-759-173-16	s	IC TL062CPW
IC507	8-759-058-54	s	IC TC7S00FU(TE85R)
IC508	8-752-052-73	s	IC CXA1451M
IC509	8-759-485-84	s	IC MC1495DR2
IC510	8-759-054-61	s	IC CLC505AJE
IC700	8-759-054-61	s	IC CLC505AJE
IC701	8-759-066-59	s	IC TC74HC4053AFS
IC702	8-759-173-16	s	IC TL062CPW
IC703	8-759-058-58	s	IC TC7S04FU(TE85R)
IC705	8-759-054-61	s	IC CLC505AJE
IC706	8-759-173-16	s	IC TL062CPW
IC707	8-759-058-54	s	IC TC7S00FU(TE85R)
IC708	8-752-052-73	s	IC CXA1451M
IC709	8-759-485-84	s	IC MC1495DR2
IC710	8-759-054-61	s	IC CLC505AJE
Q1	8-729-143-07	s	TRANSISTOR 2SA1610-Y33
Q2	8-729-143-14	s	TRANSISTOR 2SC4176-B35
Q3	8-729-820-90	s	TRANSISTOR 2SD1621-ST
Q4	8-729-820-86	s	TRANSISTOR 2SB1121-ST
Q5	8-729-143-07	s	TRANSISTOR 2SA1610-Y33
Q6	8-729-143-07	s	TRANSISTOR 2SA1610-Y33
Q7	8-729-143-07	s	TRANSISTOR 2SA1610-Y33
Q8	8-729-143-14	s	TRANSISTOR 2SC4176-B35
Q9	8-729-928-90	s	TRANSISTOR DTC114EE
Q10	8-729-143-14	s	TRANSISTOR 2SC4176-B35
Q11	8-729-143-07	s	TRANSISTOR 2SA1610-Y33
Q12	8-729-143-07	s	TRANSISTOR 2SA1610-Y33
Q13	8-729-143-07	s	TRANSISTOR 2SA1610-Y33
Q14	8-729-143-07	s	TRANSISTOR 2SA1610-Y33
Q15	8-729-143-14	s	TRANSISTOR 2SC4176-B35
Q16	8-729-928-36	s	TRANSISTOR DTA114EE
Q17	8-729-928-36	s	TRANSISTOR DTA114EE
Q18	8-729-928-36	s	TRANSISTOR DTA114EE
Q300	8-729-143-07	s	TRANSISTOR 2SA1610-Y33
Q301	8-729-143-07	s	TRANSISTOR 2SA1610-Y33
Q302	8-729-143-14	s	TRANSISTOR 2SC4176-B35
Q303	8-729-143-07	s	TRANSISTOR 2SA1610-Y33
Q304	8-729-143-14	s	TRANSISTOR 2SC4176-B35
Q305	8-769-401-67	s	TRANSISTOR 3SK163-1
Q306	8-769-401-67	s	TRANSISTOR 3SK163-1

(VA-158 BOARD)

Ref. No. or Q'ty	Part No.	SP	Description
Q307	8-769-401-67	s	TRANSISTOR 3SK163-1
Q308	8-769-401-67	s	TRANSISTOR 3SK163-1
Q309	8-729-143-14	s	TRANSISTOR 2SC4176-B35
Q310	8-729-143-07	s	TRANSISTOR 2SA1610-Y33
Q500	8-729-143-07	s	TRANSISTOR 2SA1610-Y33
Q501	8-729-143-07	s	TRANSISTOR 2SA1610-Y33
Q502	8-729-143-14	s	TRANSISTOR 2SC4176-B35
Q503	8-729-143-07	s	TRANSISTOR 2SA1610-Y33
Q504	8-729-143-14	s	TRANSISTOR 2SC4176-B35
Q506	8-769-401-67	s	TRANSISTOR 3SK163-1
Q507	8-769-401-67	s	TRANSISTOR 3SK163-1
Q508	8-769-401-67	s	TRANSISTOR 3SK163-1
Q509	8-729-143-14	s	TRANSISTOR 2SC4176-B35
Q510	8-729-143-07	s	TRANSISTOR 2SA1610-Y33
Q700	8-729-143-07	s	TRANSISTOR 2SA1610-Y33
Q701	8-729-143-07	s	TRANSISTOR 2SA1610-Y33
Q702	8-729-143-14	s	TRANSISTOR 2SC4176-B35
Q703	8-729-143-07	s	TRANSISTOR 2SA1610-Y33
Q704	8-729-143-14	s	TRANSISTOR 2SC4176-B35
Q705	8-769-401-67	s	TRANSISTOR 3SK163-1
Q706	8-769-401-67	s	TRANSISTOR 3SK163-1
Q707	8-769-401-67	s	TRANSISTOR 3SK163-1
Q708	8-769-401-67	s	TRANSISTOR 3SK163-1
Q709	8-729-143-14	s	TRANSISTOR 2SC4176-B35
Q710	8-729-143-07	s	TRANSISTOR 2SA1610-Y33
R1	1-218-740-11	s	METAL 100K 0.50% 1/16W
R2	1-218-692-11	s	CHIP, METAL 1K 0.50% 1/16W
R3	1-218-740-11	s	METAL 100K 0.50% 1/16W
R4	1-218-692-11	s	CHIP, METAL 1K 0.50% 1/16W
R5	1-218-740-11	s	METAL 100K 0.50% 1/16W
R6	1-218-692-11	s	CHIP, METAL 1K 0.50% 1/16W
R7	1-218-716-11	s	METAL 10K 0.50% 1/16W
R8	1-218-740-11	s	METAL 100K 0.50% 1/16W
R9	1-218-692-11	s	CHIP, METAL 1K 0.50% 1/16W
R10	1-218-699-11	s	CHIP, METAL 2K 0.50% 1/16W
R11	1-218-692-11	s	CHIP, METAL 1K 0.50% 1/16W
R12	1-218-740-11	s	METAL 100K 0.50% 1/16W
R13	1-218-716-11	s	METAL 10K 0.50% 1/16W
R14	1-218-716-11	s	METAL 10K 0.50% 1/16W
R15	1-218-710-11	s	CHIP, METAL 5.6K 0.50% 1/16W
R16	1-218-710-11	s	CHIP, METAL 5.6K 0.50% 1/16W
R17	1-218-733-11	s	CHIP, METAL 51K 0.50% 1/16W
R18	1-218-733-11	s	CHIP, METAL 51K 0.50% 1/16W
R20	1-218-740-11	s	METAL 100K 0.50% 1/16W
R21	1-218-740-11	s	METAL 100K 0.50% 1/16W
R22	1-218-693-11	s	CHIP, METAL 1.1K 0.50% 1/16W
R23	1-216-857-11	s	METAL, CHIP 1M 5% 1/16W
R24	1-218-704-11	s	METAL 3.3K 0.50% 1/16W
R25	1-218-692-11	s	CHIP, METAL 1K 0.50% 1/16W
R26	1-218-675-11	s	CHIP, METAL 200 0.50% 1/16W
R27	1-218-675-11	s	CHIP, METAL 200 0.50% 1/16W
R28	1-218-692-11	s	CHIP, METAL 1K 0.50% 1/16W
R29	1-218-870-11	s	CHIP, METAL 9.1K 0.50% 1/16W
R30	1-218-870-11	s	CHIP, METAL 9.1K 0.50% 1/16W
R31	1-218-732-11	s	METAL 47K 0.50% 1/16W
R32	1-216-853-11	s	METAL, CHIP 470K 5% 1/16W
R33	1-218-733-11	s	CHIP, METAL 51K 0.50% 1/16W
R34	1-218-733-11	s	CHIP, METAL 51K 0.50% 1/16W
R35	1-218-740-11	s	METAL 100K 0.50% 1/16W
R36	1-218-740-11	s	METAL 100K 0.50% 1/16W

(VA-158 BOARD)

Ref. No. or Q'ty	Part No.	SP	Description
R37	1-218-870-11	s	CHIP, METAL 9.1K 0.50% 1/16W
R38	1-218-870-11	s	CHIP, METAL 9.1K 0.50% 1/16W
R39	1-218-732-11	s	METAL 47K 0.50% 1/16W
R40	1-216-853-11	s	METAL, CHIP 470K 5% 1/16W
R41	1-218-733-11	s	CHIP, METAL 51K 0.50% 1/16W
R42	1-218-733-11	s	CHIP, METAL 51K 0.50% 1/16W
R43	1-218-740-11	s	METAL 100K 0.50% 1/16W
R44	1-218-740-11	s	METAL 100K 0.50% 1/16W
R45	1-218-668-11	s	CHIP, METAL 100 0.50% 1/16W
R46	1-218-732-11	s	METAL 47K 0.50% 1/16W
R47	1-218-748-11	s	CHIP, METAL 220K 0.50% 1/16W
R48	1-218-747-11	s	METAL 200K 0.50% 1/16W
R49	1-218-732-11	s	METAL 47K 0.50% 1/16W
R50	1-218-870-11	s	CHIP, METAL 9.1K 0.50% 1/16W
R51	1-218-870-11	s	CHIP, METAL 9.1K 0.50% 1/16W
R52	1-216-863-11	s	METAL 3.3M 5% 1/16W
R53	1-218-716-11	s	METAL 10K 0.50% 1/16W
R54	1-218-732-11	s	METAL 47K 0.50% 1/16W
R55	1-218-732-11	s	METAL 47K 0.50% 1/16W
R56	1-218-732-11	s	METAL 47K 0.50% 1/16W
R57	1-218-716-11	s	METAL 10K 0.50% 1/16W
R58	1-218-668-11	s	CHIP, METAL 100 0.50% 1/16W
R59	1-218-733-11	s	CHIP, METAL 51K 0.50% 1/16W
R60	1-218-716-11	s	METAL 10K 0.50% 1/16W
R61	1-218-733-11	s	CHIP, METAL 51K 0.50% 1/16W
R62	1-218-668-11	s	CHIP, METAL 100 0.50% 1/16W
R63	1-218-740-11	s	METAL 100K 0.50% 1/16W
R64	1-218-730-11	s	CHIP, METAL 39K 0.50% 1/16W
R65	1-218-716-11	s	METAL 10K 0.50% 1/16W
R66	1-218-733-11	s	CHIP, METAL 51K 0.50% 1/16W
R67	1-218-740-11	s	METAL 100K 0.50% 1/16W
R68	1-218-733-11	s	CHIP, METAL 51K 0.50% 1/16W
R69	1-218-740-11	s	METAL 100K 0.50% 1/16W
R70	1-218-723-11	s	METAL 20K 0.50% 1/16W
R71	1-218-727-11	s	METAL 30K 0.50% 1/16W
R72	1-218-727-11	s	METAL 30K 0.50% 1/16W
R73	1-218-727-11	s	METAL 30K 0.50% 1/16W
R74	1-218-727-11	s	METAL 30K 0.50% 1/16W
R75	1-218-723-11	s	METAL 20K 0.50% 1/16W
R76	1-218-727-11	s	METAL 30K 0.50% 1/16W
R77	1-218-727-11	s	METAL 30K 0.50% 1/16W
R78	1-218-727-11	s	METAL 30K 0.50% 1/16W
R79	1-218-727-11	s	METAL 30K 0.50% 1/16W
R80	1-218-723-11	s	METAL 20K 0.50% 1/16W
R81	1-218-727-11	s	METAL 30K 0.50% 1/16W
R82	1-218-727-11	s	METAL 30K 0.50% 1/16W
R83	1-218-727-11	s	METAL 30K 0.50% 1/16W
R84	1-218-727-11	s	METAL 30K 0.50% 1/16W
R85	1-218-723-11	s	METAL 20K 0.50% 1/16W
R86	1-218-727-11	s	METAL 30K 0.50% 1/16W
R87	1-218-727-11	s	METAL 30K 0.50% 1/16W
R88	1-218-727-11	s	METAL 30K 0.50% 1/16W
R89	1-218-727-11	s	METAL 30K 0.50% 1/16W
R90	1-218-723-11	s	METAL 20K 0.50% 1/16W
R91	1-218-727-11	s	METAL 30K 0.50% 1/16W
R92	1-218-727-11	s	METAL 30K 0.50% 1/16W
R93	1-218-727-11	s	METAL 30K 0.50% 1/16W
R94	1-218-727-11	s	METAL 30K 0.50% 1/16W
R95	1-218-723-11	s	METAL 20K 0.50% 1/16W

(VA-158 BOARD)

Ref. No. or Q'ty	Part No.	SP	Description
R96	1-218-727-11	s	METAL 30K 0.50% 1/16W
R97	1-218-727-11	s	METAL 30K 0.50% 1/16W
R98	1-218-727-11	s	METAL 30K 0.50% 1/16W
R99	1-218-727-11	s	METAL 30K 0.50% 1/16W
R100	1-218-733-11	s	CHIP, METAL 51K 0.50% 1/16W
R101	1-218-740-11	s	METAL 100K 0.50% 1/16W
R102	1-218-730-11	s	CHIP, METAL 39K 0.50% 1/16W
R103	1-218-737-11	s	CHIP, METAL 75K 0.50% 1/16W
R104	1-218-730-11	s	CHIP, METAL 39K 0.50% 1/16W
R105	1-218-737-11	s	CHIP, METAL 75K 0.50% 1/16W
R106	1-218-730-11	s	CHIP, METAL 39K 0.50% 1/16W
R107	1-218-737-11	s	CHIP, METAL 75K 0.50% 1/16W
R108	1-218-740-11	s	CHIP, METAL 100K 0.50% 1/16W
R109	1-218-740-11	s	CHIP, METAL 100K 0.50% 1/16W
R110	1-218-740-11	s	CHIP, METAL 100K 0.50% 1/16W
R111	1-218-720-11	s	METAL 15K 0.50% 1/16W
R112	1-218-720-11	s	METAL 15K 0.50% 1/16W
R113	1-218-720-11	s	METAL 15K 0.50% 1/16W
R114	1-218-720-11	s	METAL 15K 0.50% 1/16W
R115	1-218-720-11	s	METAL 15K 0.50% 1/16W
R116	1-218-720-11	s	METAL 15K 0.50% 1/16W
R117	1-218-733-11	s	CHIP, METAL 51K 0.50% 1/16W
R118	1-218-740-11	s	METAL 100K 0.50% 1/16W
R119	1-218-733-11	s	CHIP, METAL 51K 0.50% 1/16W
R120	1-218-740-11	s	METAL 100K 0.50% 1/16W
R121	1-218-728-11	s	METAL 33K 0.50% 1/16W
R122	1-218-644-11	s	METAL 10 0.50% 1/16W
R123	1-218-716-11	s	METAL 10K 0.50% 1/16W
R124	1-218-716-11	s	METAL 10K 0.50% 1/16W
R125	1-218-689-11	s	CHIP, METAL 750 0.50% 1/16W
R126	1-218-698-11	s	METAL 1.8K 0.50% 1/16W
R127	1-218-716-11	s	METAL 10K 0.50% 1/16W
R128	1-218-716-11	s	METAL 10K 0.50% 1/16W
R129	1-218-716-11	s	METAL 10K 0.50% 1/16W
R130	1-218-668-11	s	CHIP, METAL 100 0.50% 1/16W
R131	1-218-668-11	s	CHIP, METAL 100 0.50% 1/16W
R132	1-218-740-11	s	METAL 100K 0.50% 1/16W
R133	1-218-740-11	s	METAL 100K 0.50% 1/16W
R134	1-218-740-11	s	METAL 100K 0.50% 1/16W
R135	1-218-716-11	s	METAL 10K 0.50% 1/16W
R136	1-218-716-11	s	METAL 10K 0.50% 1/16W
R137	1-216-864-11	s	METAL, CHIP 0 5% 1/16W
R138	1-218-716-11	s	METAL 10K 0.50% 1/16W
R139	1-218-881-11	s	CHIP, METAL 27K 0.50% 1/16W
R140	1-218-719-11	s	METAL 13K 0.50% 1/16W
R141	1-218-714-11	s	METAL 8.2K 0.50% 1/16W
R142	1-218-703-11	s	CHIP, METAL 3K 0.50% 1/16W
R143	1-218-701-11	s	METAL 2.4K 0.50% 1/16W
R144	1-218-679-91	s	CHIP, METAL 300 0.50% 1/16W
R145	1-218-709-11	s	METAL 5.1K 0.50% 1/16W
R146	1-218-740-11	s	METAL 100K 0.50% 1/16W
R147	1-218-740-11	s	METAL 100K 0.50% 1/16W
R148	1-218-740-11	s	METAL 100K 0.50% 1/16W
R149	1-218-692-11	s	CHIP, METAL 1K 0.50% 1/16W
R150	1-218-740-11	s	METAL 100K 0.50% 1/16W
R151	1-218-851-11	s	CHIP, METAL 1.5K 0.50% 1/16W
R152	1-218-870-11	s	CHIP, METAL 9.1K 0.50% 1/16W
R153	1-216-864-11	s	METAL, CHIP 0 5% 1/16W
R154	1-218-689-11	s	CHIP, METAL 750 0.50% 1/16W

(VA-158 BOARD)

Ref. No. or Q'ty	Part No.	SP	Description
R155	1-218-851-11	s	CHIP, METAL 1.5K 0.50% 1/16W
R156	1-216-864-11	s	METAL, CHIP 0 5% 1/16W
R157	1-218-746-11	s	METAL 180K 0.50% 1/16W
R158	1-218-851-11	s	CHIP, METAL 1.5K 0.50% 1/16W
R159	1-218-692-11	s	CHIP, METAL 1K 0.50% 1/16W
R160	1-218-746-11	s	METAL 180K 0.50% 1/16W
R161	1-218-699-11	s	CHIP, METAL 2K 0.50% 1/16W
R162	1-218-740-11	s	METAL 100K 0.50% 1/16W
R163	1-218-668-11	s	CHIP, METAL 100 0.50% 1/16W
R164	1-218-723-11	s	METAL 20K 0.50% 1/16W
R165	1-218-692-11	s	CHIP, METAL 1K 0.50% 1/16W
R166	1-218-723-11	s	METAL 20K 0.50% 1/16W
R167	1-218-692-11	s	CHIP, METAL 1K 0.50% 1/16W
R168	1-218-723-11	s	METAL 20K 0.50% 1/16W
R169	1-218-692-11	s	CHIP, METAL 1K 0.50% 1/16W
R170	1-218-692-11	s	CHIP, METAL 1K 0.50% 1/16W
R171	1-218-692-11	s	CHIP, METAL 1K 0.50% 1/16W
R172	1-218-692-11	s	CHIP, METAL 1K 0.50% 1/16W
R173	1-218-740-11	s	METAL 100K 0.50% 1/16W
R174	1-218-740-11	s	METAL 100K 0.50% 1/16W
R175	1-218-740-11	s	METAL 100K 0.50% 1/16W
R300	1-218-744-11	s	CHIP, METAL 150K 0.50% 1/16W
R301	1-218-694-11	s	CHIP, METAL 1.2K 0.50% 1/16W
R302	1-218-704-11	s	METAL 3.3K 0.50% 1/16W
R303	1-218-692-11	s	CHIP, METAL 1K 0.50% 1/16W
R304	1-218-692-11	s	CHIP, METAL 1K 0.50% 1/16W
R305	1-218-716-11	s	METAL 10K 0.50% 1/16W
R306	1-218-692-11	s	CHIP, METAL 1K 0.50% 1/16W
R307	1-218-745-11	s	CHIP, METAL 160K 0.50% 1/16W
R308	1-218-668-11	s	CHIP, METAL 100 0.50% 1/16W
R309	1-218-676-11	s	METAL 220 0.50% 1/16W
R310	1-218-713-11	s	CHIP, METAL 7.5K 0.50% 1/16W
R311	1-218-698-11	s	METAL 1.8K 0.50% 1/16W
R312	1-218-697-11	s	METAL 1.6K 0.50% 1/16W
R313	1-218-702-11	s	CHIP, METAL 2.7K 0.50% 1/16W
R314	1-218-717-11	s	CHIP, METAL 11K 0.50% 1/16W
R315	1-218-707-11	s	CHIP, METAL 4.3K 0.50% 1/16W
R316	1-218-680-11	s	METAL 330 0.50% 1/16W
R317	1-216-864-11	s	METAL, CHIP 0.5% 1/16W
R318	1-218-663-11	s	METAL 62 0 50% 1/16W
R319	1-218-691-11	s	CHIP, METAL 910 0.50% 1/16W
R320	1-218-708-11	s	METAL 4.7K 0.50% 1/16W
R321	1-218-708-11	s	METAL 4.7K 0.50% 1/16W
R322	1-218-733-11	s	CHIP, METAL 51K 0.50% 1/16W
R323	1-218-685-11	s	METAL 510 0.50% 1/16W
R324	1-218-733-11	s	CHIP, METAL 51K 0.50% 1/16W
R325	1-218-692-11	s	CHIP, METAL 1K 0.50% 1/16W
R326	1-216-864-11	s	METAL, CHIP 0 5% 1/16W
R327	1-218-690-11	s	CHIP, METAL 820 0.50% 1/16W
R328	1-216-864-11	s	METAL, CHIP 0 5% 1/16W
R329	1-218-716-11	s	METAL 10K 0.50% 1/16W
R330	1-218-716-11	s	METAL 10K 0.50% 1/16W
R331	1-218-746-11	s	METAL 180K 0.50% 1/16W
R332	1-218-692-11	s	CHIP, METAL 1K 0.50% 1/16W
R333	1-218-660-91	s	CHIP, METAL 47 0.50% 1/16W
R334	1-218-676-11	s	METAL 220 0.50% 1/16W
R335	1-218-735-11	s	CHIP, METAL 62K 0.50% 1/16W
R336	1-218-727-11	s	METAL 30K 0.50% 1/16W
R337	1-218-686-11	s	METAL 560 0.50% 1/16W
R338	1-218-674-11	s	METAL 180 0.50% 1/16W
R339	1-218-684-11	s	CHIP, METAL 470 0.50% 1/16W
R340	1-218-687-11	s	CHIP, METAL 620 0.50% 1/16W

(VA-158 BOARD)

Ref. No. or Q'ty	Part No.	SP	Description
R341	1-218-701-11	s	METAL 2.4K 0.50% 1/16W
R342	1-218-747-11	s	METAL 200K 0.50% 1/16W
R343	1-218-735-11	s	CHIP, METAL 62K 0.50% 1/16W
R344	1-218-716-11	s	METAL 10K 0.50% 1/16W
R345	1-218-716-11	s	METAL 10K 0.50% 1/16W
R346	1-218-716-11	s	METAL 10K 0.50% 1/16W
R347	1-218-685-11	s	METAL 510 0.50% 1/16W
R348	1-218-692-11	s	CHIP, METAL 1K 0.50% 1/16W
R349	1-218-723-11	s	METAL 20K 0.50% 1/16W
R350	1-218-704-11	s	METAL 3.3K 0.50% 1/16W
R351	1-218-723-11	s	METAL 20K 0.50% 1/16W
R352	1-218-716-11	s	METAL 10K 0.50% 1/16W
R353	1-218-716-11	s	METAL 10K 0.50% 1/16W
R354	1-218-713-11	s	CHIP, METAL 7.5K 0.50% 1/16W
R355	1-218-727-11	s	METAL 30K 0.50% 1/16W
R356	1-218-692-11	s	CHIP, METAL 1K 0.50% 1/16W
R357	1-218-699-11	s	CHIP, METAL 2K 0.50% 1/16W
R358	1-218-694-11	s	CHIP, METAL 1.2K 0.50% 1/16W
R359	1-218-692-11	s	CHIP, METAL 1K 0.50% 1/16W
R360	1-218-682-11	s	METAL 390 0.50% 1/16W
R361	1-218-710-11	s	CHIP, METAL 5.6K 0.50% 1/16W
R362	1-218-702-11	s	CHIP, METAL 2.7K 0.50% 1/16W
R363	1-218-716-11	s	METAL 10K 0.50% 1/16W
R364	1-218-676-11	s	METAL 220 0.50% 1/16W
R365	1-218-686-11	s	METAL 560 0.50% 1/16W
R366	1-218-709-11	s	METAL 5.1K 0.50% 1/16W
R367	1-218-723-11	s	METAL 20K 0.50% 1/16W
R368	1-218-716-11	s	METAL 10K 0.50% 1/16W
R369	1-218-727-11	s	METAL 30K 0.50% 1/16W
R370	1-218-714-11	s	METAL 8.2K 0.50% 1/16W
R371	1-218-699-11	s	CHIP, METAL 2K 0.50% 1/16W
R372	1-218-745-11	s	CHIP, METAL 160K 0.50% 1/16W
R373	1-218-692-11	s	CHIP, METAL 1K 0.50% 1/16W
R374	1-218-644-11	s	METAL 10 0.50% 1/16W
R500	1-218-744-11	s	CHIP, METAL 150K 0.50% 1/16W
R501	1-218-694-11	s	CHIP, METAL 1.2K 0.50% 1/16W
R502	1-218-704-11	s	METAL 3.3K 0.50% 1/16W
R503	1-218-692-11	s	CHIP, METAL 1K 0.50% 1/16W
R504	1-218-692-11	s	CHIP, METAL 1K 0.50% 1/16W
R505	1-218-716-11	s	METAL 10K 0.50% 1/16W
R506	1-218-692-11	s	CHIP, METAL 1K 0.50% 1/16W
R507	1-218-745-11	s	CHIP, METAL 160K 0.50% 1/16W
R508	1-218-668-11	s	CHIP, METAL 100 0.50% 1/16W
R509	1-218-676-11	s	METAL 220 0.50% 1/16W
R510	1-218-713-11	s	CHIP, METAL 7.5K 0.50% 1/16W
R511	1-218-698-11	s	METAL 1.8K 0.50% 1/16W
R512	1-218-697-11	s	METAL 1.6K 0.50% 1/16W
R513	1-218-702-11	s	CHIP, METAL 2.7K 0.50% 1/16W
R514	1-218-717-11	s	CHIP, METAL 11K 0.50% 1/16W
R515	1-218-707-11	s	CHIP, METAL 4.3K 0.50% 1/16W
R516	1-218-680-11	s	METAL 330 0.50% 1/16W
R517	1-216-864-11	s	METAL, CHIP 0 5% 1/16W
R518	1-218-663-11	s	METAL 62 0.50% 1/16W
R519	1-218-691-11	s	CHIP, METAL 910 0.50% 1/16W
R520	1-218-708-11	s	METAL 4.7K 0.50% 1/16W
R521	1-218-708-11	s	METAL 4.7K 0.50% 1/16W
R522	1-218-685-11	s	METAL 510 0.50% 1/16W
R528	1-216-864-11	s	METAL, CHIP 0 5% 1/16W
R529	1-218-716-11	s	METAL 10K 0.50% 1/16W
R530	1-218-716-11	s	METAL 10K 0.50% 1/16W

(VA-158 BOARD)

Ref. No. or Q'ty	Part No.	SP	Description
R531	1-218-746-11	s	METAL 180K 0.50% 1/16W
R532	1-218-692-11	s	CHIP, METAL 1K 0.50% 1/16W
R533	1-218-660-91	s	CHIP, METAL 47 0.50% 1/16W
R534	1-218-676-11	s	METAL 220 0.50% 1/16W
R535	1-218-735-11	s	CHIP, METAL 62K 0.50% 1/16W
R536	1-218-727-11	s	METAL 30K 0.50% 1/16W
R537	1-218-686-11	s	METAL 560 0.50% 1/16W
R538	1-218-674-11	s	METAL 180 0.50% 1/16W
R539	1-218-684-11	s	CHIP, METAL 470 0.50% 1/16W
R540	1-218-687-11	s	CHIP, METAL 620 0.50% 1/16W
R541	1-218-701-11	s	METAL 2.4K 0.50% 1/16W
R542	1-218-747-11	s	METAL 200K 0.50% 1/16W
R543	1-218-735-11	s	CHIP, METAL 62K 0.50% 1/16W
R544	1-218-716-11	s	METAL 10K 0.50% 1/16W
R545	1-218-716-11	s	METAL 10K 0.50% 1/16W
R546	1-218-716-11	s	METAL 10K 0.50% 1/16W
R547	1-218-685-11	s	METAL 510 0.50% 1/16W
R548	1-218-692-11	s	CHIP, METAL 1K 0.50% 1/16W
R549	1-218-723-11	s	METAL 20K 0.50% 1/16W
R550	1-218-704-11	s	METAL 3.3K 0.50% 1/16W
R551	1-218-723-11	s	METAL 20K 0.50% 1/16W
R552	1-218-716-11	s	METAL 10K 0.50% 1/16W
R553	1-218-716-11	s	METAL 10K 0.50% 1/16W
R554	1-218-713-11	s	CHIP, METAL 7.5K 0.50% 1/16W
R555	1-218-727-11	s	METAL 30K 0.50% 1/16W
R556	1-218-692-11	s	CHIP, METAL 1K 0.50% 1/16W
R557	1-218-699-11	s	CHIP, METAL 2K 0.50% 1/16W
R558	1-218-694-11	s	CHIP, METAL 1.2K 0.50% 1/16W
R559	1-218-692-11	s	CHIP, METAL 1K 0.50% 1/16W
R560	1-218-682-11	s	METAL 390 0.50% 1/16W
R561	1-218-710-11	s	CHIP, METAL 5.6K 0.50% 1/16W
R562	1-218-702-11	s	CHIP, METAL 2.7K 0.50% 1/16W
R563	1-218-716-11	s	METAL 10K 0.50% 1/16W
R564	1-218-676-11	s	METAL 220 0.50% 1/16W
R565	1-218-686-11	s	METAL 560 0.50% 1/16W
R566	1-218-709-11	s	METAL 5.1K 0.50% 1/16W
R567	1-218-723-11	s	METAL 20K 0.50% 1/16W
R568	1-218-716-11	s	METAL 10K 0.50% 1/16W
R569	1-218-727-11	s	METAL 30K 0.50% 1/16W
R570	1-218-714-11	s	METAL 8.2K 0.50% 1/16W
R571	1-218-699-11	s	CHIP, METAL 2K 0.50% 1/16W
R572	1-218-745-11	s	CHIP, METAL 160K 0.50% 1/16W
R573	1-218-692-11	s	CHIP, METAL 1K 0.50% 1/16W
R574	1-218-644-11	s	METAL 10 0.50% 1/16W
R700	1-218-744-11	s	CHIP, METAL 150K 0.50% 1/16W
R701	1-218-694-11	s	CHIP, METAL 1.2K 0.50% 1/16W
R702	1-218-704-11	s	METAL 3.3K 0.50% 1/16W
R703	1-218-692-11	s	CHIP, METAL 1K 0.50% 1/16W
R704	1-218-692-11	s	CHIP, METAL 1K 0.50% 1/16W
R705	1-218-716-11	s	METAL 10K 0.50% 1/16W
R706	1-218-692-11	s	CHIP, METAL 1K 0.50% 1/16W
R707	1-218-745-11	s	CHIP, METAL 160K 0.50% 1/16W
R708	1-218-668-11	s	CHIP, METAL 100 0.50% 1/16W
R709	1-218-676-11	s	METAL 220 0.50% 1/16W
R710	1-218-713-11	s	CHIP, METAL 7.5K 0.50% 1/16W
R711	1-218-698-11	s	METAL 1.8K 0.50% 1/16W
R712	1-218-697-11	s	METAL 1.6K 0.50% 1/16W
R713	1-218-702-11	s	CHIP, METAL 2.7K 0.50% 1/16W

(VA-158 BOARD)

Ref. No. or Q'ty	Part No.	SP	Description
R714	1-218-717-11	s	CHIP, METAL 11K 0.50% 1/16W
R715	1-218-707-11	s	CHIP, METAL 4.3K 0.50% 1/16W
R716	1-218-680-11	s	METAL 330 0.50% 1/16W
R717	1-216-864-11	s	METAL, CHIP 0 5% 1/16W
R718	1-218-663-11	s	METAL 62 0.50% 1/16W
R719	1-218-691-11	s	CHIP, METAL 910 0.50% 1/16W
R720	1-218-708-11	s	METAL 4.7K 0.50% 1/16W
R721	1-218-708-11	s	METAL 4.7K 0.50% 1/16W
R722	1-218-733-11	s	CHIP, METAL 51K 0.50% 1/16W
R723	1-218-682-11	s	METAL 390 0.50% 1/16W
R724	1-218-733-11	s	CHIP, METAL 51K 0.50% 1/16W
R725	1-218-692-11	s	CHIP, METAL 1K 0.50% 1/16W
R726	1-218-645-11	s	CHIP, METAL 11 0.50% 1/16W
R727	1-218-682-11	s	METAL 390 0.50% 1/16W
R728	1-216-864-11	s	METAL, CHIP 0 5% 1/16W
R729	1-218-716-11	s	METAL 10K 0.50% 1/16W
R730	1-218-716-11	s	METAL 10K 0.50% 1/16W
R731	1-218-746-11	s	METAL 180K 0.50% 1/16W
R732	1-218-692-11	s	CHIP, METAL 1K 0.50% 1/16W
R733	1-218-660-91	s	CHIP, METAL 47 0.50% 1/16W
R734	1-218-676-11	s	METAL 220 0.50% 1/16W
R735	1-218-735-11	s	CHIP, METAL 62K 0.50% 1/16W
R736	1-218-727-11	s	METAL 30K 0.50% 1/16W
R737	1-218-686-11	s	METAL 560 0.50% 1/16W
R738	1-218-674-11	s	METAL 180 0.50% 1/16W
R739	1-218-684-11	s	CHIP, METAL 470 0.50% 1/16W
R740	1-218-687-11	s	CHIP, METAL 620 0.50% 1/16W
R741	1-218-701-11	s	METAL 2.4K 0.50% 1/16W
R742	1-218-747-11	s	METAL 200K 0.50% 1/16W
R743	1-218-735-11	s	CHIP, METAL 62K 0.50% 1/16W
R744	1-218-716-11	s	METAL 10K 0.50% 1/16W
R745	1-218-716-11	s	METAL 10K 0.50% 1/16W
R746	1-218-716-11	s	METAL 10K 0.50% 1/16W
R747	1-218-685-11	s	METAL 510 0.50% 1/16W
R748	1-218-692-11	s	CHIP, METAL 1K 0.50% 1/16W
R749	1-218-723-11	s	METAL 20K 0.50% 1/16W
R750	1-218-704-11	s	METAL 3.3K 0.50% 1/16W
R751	1-218-723-11	s	METAL 20K 0.50% 1/16W
R752	1-218-716-11	s	METAL 10K 0.50% 1/16W
R753	1-218-716-11	s	METAL 10K 0.50% 1/16W
R754	1-218-713-11	s	CHIP, METAL 7.5K 0.50% 1/16W
R755	1-218-727-11	s	METAL 30K 0.50% 1/16W
R756	1-218-692-11	s	CHIP, METAL 1K 0.50% 1/16W
R757	1-218-699-11	s	CHIP, METAL 2K 0.50% 1/16W
R758	1-218-694-11	s	CHIP, METAL 1.2K 0.50% 1/16W
R759	1-218-692-11	s	CHIP, METAL 1K 0.50% 1/16W
R760	1-218-682-11	s	METAL 390 0.50% 1/16W
R761	1-218-710-11	s	CHIP, METAL 5.6K 0.50% 1/16W
R762	1-218-702-11	s	CHIP, METAL 2.7K 0.50% 1/16W
R763	1-218-716-11	s	METAL 10K 0.50% 1/16W
R764	1-218-676-11	s	METAL 220 0.50% 1/16W
R765	1-218-686-11	s	METAL 560 0.50% 1/16W
R766	1-218-709-11	s	METAL 5.1K 0.50% 1/16W
R767	1-218-723-11	s	METAL 20K 0.50% 1/16W
R768	1-218-716-11	s	METAL 10K 0.50% 1/16W
R769	1-218-727-11	s	METAL 30K 0.50% 1/16W
R770	1-218-714-11	s	METAL 8.2K 0.50% 1/16W
R771	1-218-699-11	s	CHIP, METAL 2K 0.50% 1/16W
R772	1-218-745-11	s	CHIP, METAL 160K 0.50% 1/16W

(VA-158 BOARD)

Ref. No. or Q'ty	Part No.	SP	Description
R773	1-218-692-11	s	CHIP, METAL 1K 0.50% 1/16W
R774	1-218-644-11	s	METAL 10 0.50% 1/16W
R775	1-218-692-11	s	CHIP, METAL 1K 0.50% 1/16W
RV300	1-241-260-11	s	METAL, ADJ 500
RV500	1-241-260-11	s	METAL, ADJ 500
RV700	1-241-260-11	s	METAL, ADJ 500

VDA-31 BOARD

Ref. No. or Q'ty	Part No.	SP	Description
1pc	A-8273-138-A	o	MOUNTED CIRCUIT BOARD, VDA-31 (W/DU-24 MOUNTED CIRCUIT BOARD)
1pc	3-602-438-01	o	PANEL,VDA-31 PC BOARD
1pc	3-724-753-01	o	RING
6pcs	3-729-061-01	s	SCREW (M2X4.5) (TYPE 1)
C1	1-162-927-11	s	CERAMIC, CHIP 100PF 5% 50V
C3	1-162-915-11	s	CERAMIC, CHIP 10PF 5PF 50V
C4	1-162-915-11	s	CERAMIC, CHIP 10PF 5PF 50V
C5	1-164-156-11	s	CERAMIC 0.1uF 25V
C6	1-164-156-11	s	CERAMIC 0.1uF 25V
C7	1-104-823-11	s	TANTALUM, CHIP 47uF 20% 16V
C8	1-104-823-11	s	TANTALUM, CHIP 47uF 20% 16V
C9	1-162-927-11	s	CERAMIC, CHIP 100PF 5% 50V
C10	1-162-927-11	s	CERAMIC, CHIP 100PF 5% 50V
C11	1-162-915-11	s	CERAMIC, CHIP 10PF 5PF 50V
C12	1-135-177-21	s	TANTALUM, CHIP 1uF 10% 25V
C13	1-135-177-21	s	TANTALUM, CHIP 1uF 10% 25V
C14	1-164-156-11	s	CERAMIC 0.1uF 25V
C15	1-162-915-11	s	CERAMIC, CHIP 10PF 5PF 50V
C16	1-162-915-11	s	CERAMIC, CHIP 10PF 5PF 50V
C17	1-162-915-11	s	CERAMIC, CHIP 10PF 5PF 50V
C18	1-162-915-11	s	CERAMIC, CHIP 10PF 5PF 50V
C101	1-104-851-11	s	TANTALUM, CHIP 10uF 20% 10V
C102	1-104-851-11	s	TANTALUM, CHIP 10uF 20% 10V
C103	1-164-156-11	s	CERAMIC 0.1uF 25V
C104	1-164-156-11	s	CERAMIC 0.1uF 25V
C105	1-162-905-11	s	CERAMIC 1PF 0.25PF 50V
C106	1-162-927-11	s	CERAMIC, CHIP 100PF 5% 50V
C111	1-164-156-11	s	CERAMIC 0.1uF 25V
C112	1-164-156-11	s	CERAMIC 0.1uF 25V
C113	1-162-908-11	s	CERAMIC 3PF 0.25PF 50V
C114	1-162-927-11	s	CERAMIC, CHIP 100PF 5% 50V
C115	1-104-851-11	s	TANTALUM, CHIP 10uF 20% 10V
C116	1-164-156-11	s	CERAMIC 0.1uF 25V
C117	1-164-156-11	s	CERAMIC 0.1uF 25V
C118	1-162-908-11	s	CERAMIC 3PF 0.25PF 50V
C119	1-104-851-11	s	TANTALUM, CHIP 10uF 20% 10V
C120	1-162-927-11	s	CERAMIC, CHIP 100PF 5% 50V
C121	1-162-915-11	s	CERAMIC, CHIP 10PF 5PF 50V
C122	1-135-091-00	s	TANTALUM, CHIP 1uF 20% 16V
C124	1-162-919-11	s	CERAMIC, CHIP 22PF 5% 50V
C126	1-162-963-11	s	CERAMIC, CHIP 680PF 10% 50V
C127	1-162-909-11	s	CERAMIC 4PF 0.25PF 50V
C128	1-162-921-11	s	CERAMIC, CHIP 33PF 5% 50V
C201	1-104-851-11	s	TANTALUM, CHIP 10uF 20% 10V
C202	1-104-851-11	s	TANTALUM, CHIP 10uF 20% 10V
C203	1-164-156-11	s	CERAMIC 0.1uF 25V
C204	1-164-156-11	s	CERAMIC 0.1uF 25V
C205	1-162-905-11	s	CERAMIC 1PF 0.25PF 50V
C206	1-162-927-11	s	CERAMIC, CHIP 100PF 5% 50V
C207	1-164-156-11	s	CERAMIC 0.1uF 25V
C208	1-164-156-11	s	CERAMIC 0.1uF 25V
C209	1-162-905-11	s	CERAMIC 1PF 0.25PF 50V
C210	1-162-927-11	s	CERAMIC, CHIP 100PF 5% 50V
C211	1-164-156-11	s	CERAMIC 0.1uF 25V
C212	1-164-156-11	s	CERAMIC 0.1uF 25V
C213	1-162-907-11	s	CERAMIC, CHIP 2PF 50V

(VDA-31 BOARD)

Ref. No. or Q'ty	Part No.	SP	Description
C214	1-162-927-11	s	CERAMIC, CHIP 100PF 5% 50V
C215	1-104-851-11	s	TANTALUM, CHIP 10uF 20% 10V
C216	1-164-156-11	s	CERAMIC 0.1uF 25V
C217	1-164-156-11	s	CERAMIC 0.1uF 25V
C218	1-162-908-11	s	CERAMIC 3PF 0.25PF 50V
C219	1-104-851-11	s	TANTALUM, CHIP 10uF 20% 10V
C220	1-162-927-11	s	CERAMIC, CHIP 100PF 5% 50V
C221	1-162-915-11	s	CERAMIC, CHIP 10PF 5PF 50V
C222	1-135-091-00	s	TANTALUM, CHIP 1uF 20% 16V
C224	1-162-919-11	s	CERAMIC, CHIP 22PF 5% 50V
C226	1-162-963-11	s	CERAMIC, CHIP 680PF 10% 50V
C227	1-162-909-11	s	CERAMIC 4PF 0.25PF 50V
C228	1-162-921-11	s	CERAMIC, CHIP 33PF 5% 50V
C301	1-104-851-11	s	TANTALUM, CHIP 10uF 20% 10V
C302	1-104-851-11	s	TANTALUM, CHIP 10uF 20% 10V
C303	1-164-156-11	s	CERAMIC 0.1uF 25V
C304	1-164-156-11	s	CERAMIC 0.1uF 25V
C305	1-162-905-11	s	CERAMIC 1PF 0.25PF 50V
C306	1-162-927-11	s	CERAMIC, CHIP 100PF 5% 50V
C311	1-164-156-11	s	CERAMIC 0.1uF 25V
C312	1-164-156-11	s	CERAMIC 0.1uF 25V
C313	1-162-908-11	s	CERAMIC 3PF 0.25PF 50V
C314	1-162-927-11	s	CERAMIC, CHIP 100PF 5% 50V
C315	1-104-851-11	s	TANTALUM, CHIP 10uF 20% 10V
C316	1-164-156-11	s	CERAMIC 0.1uF 25V
C317	1-164-156-11	s	CERAMIC 0.1uF 25V
C318	1-162-908-11	s	CERAMIC 3PF 0.25PF 50V
C319	1-104-851-11	s	TANTALUM, CHIP 10uF 20% 10V
C320	1-162-927-11	s	CERAMIC, CHIP 100PF 5% 50V
C321	1-162-915-11	s	CERAMIC, CHIP 10PF 5PF 50V
C322	1-135-091-00	s	TANTALUM, CHIP 1uF 20% 16V
C324	1-162-919-11	s	CERAMIC, CHIP 22PF 5% 50V
C326	1-162-963-11	s	CERAMIC, CHIP 680PF 10% 50V
C327	1-162-909-11	s	CERAMIC 4PF 0.25PF 50V
C328	1-162-921-11	s	CERAMIC, CHIP 33PF 5% 50V
C401	1-104-851-11	s	TANTALUM, CHIP 10uF 20% 10V
C402	1-104-851-11	s	TANTALUM, CHIP 10uF 20% 10V
C403	1-162-965-11	s	CERAMIC 0.0015uF 10% 50V
C404	1-162-965-11	s	CERAMIC 0.0015uF 10% 50V
C405	1-162-965-11	s	CERAMIC 0.0015uF 10% 50V
C406	1-164-156-11	s	CERAMIC 0.1uF 25V
C407	1-164-156-11	s	CERAMIC 0.1uF 25V
C408	1-164-156-11	s	CERAMIC 0.1uF 25V
C412	1-164-156-11	s	CERAMIC 0.1uF 25V
C413	1-164-156-11	s	CERAMIC 0.1uF 25V
C414	1-164-156-11	s	CERAMIC 0.1uF 25V
C415	1-162-927-11	s	CERAMIC, CHIP 100PF 5% 50V
C416	1-162-927-11	s	CERAMIC, CHIP 100PF 5% 50V
C417	1-162-927-11	s	CERAMIC, CHIP 100PF 5% 50V
C418	1-104-851-11	s	TANTALUM, CHIP 10uF 20% 10V
C419	1-104-851-11	s	TANTALUM, CHIP 10uF 20% 10V
C420	1-164-156-11	s	CERAMIC 0.1uF 25V
C421	1-164-156-11	s	CERAMIC 0.1uF 25V
C422	1-164-156-11	s	CERAMIC 0.1uF 25V
C424	1-164-156-11	s	CERAMIC 0.1uF 25V
C426	1-162-927-11	s	CERAMIC, CHIP 100PF 5% 50V
C427	1-164-156-11	s	CERAMIC 0.1uF 25V
C428	1-164-156-11	s	CERAMIC 0.1uF 25V
C429	1-162-927-11	s	CERAMIC, CHIP 100PF 5% 50V

(VDA-31 BOARD)

Ref. No. or Q'ty	Part No.	SP	Description
C431	1-162-927-11	s	CERAMIC, CHIP 100PF 5% 50V
C501	1-104-851-11	s	TANTALUM, CHIP 10uF 20% 10V
C502	1-104-851-11	s	TANTALUM, CHIP 10uF 20% 10V
C503	1-104-851-11	s	TANTALUM, CHIP 10uF 20% 10V
C504	1-164-156-11	s	CERAMIC 0.1uF 25V
C505	1-164-156-11	s	CERAMIC 0.1uF 25V
C506	1-162-927-11	s	CERAMIC, CHIP 100PF 5% 50V
C507	1-162-927-11	s	CERAMIC, CHIP 100PF 5% 50V
C508	1-104-851-11	s	TANTALUM, CHIP 10uF 20% 10V
C509	1-164-156-11	s	CERAMIC 0.1uF 25V
C510	1-164-156-11	s	CERAMIC 0.1uF 25V
C511	1-162-915-11	s	CERAMIC, CHIP 10PF 5PF 50V
C512	1-164-156-11	s	CERAMIC 0.1uF 25V
C515	1-164-156-11	s	CERAMIC 0.1uF 25V
C516	1-104-851-11	s	TANTALUM, CHIP 10uF 20% 10V
C517	1-164-156-11	s	CERAMIC 0.1uF 25V
C518	1-104-851-11	s	TANTALUM, CHIP 10uF 20% 10V
C519	1-104-851-11	s	TANTALUM, CHIP 10uF 20% 10V
C520	1-104-852-11	s	TANTALUM, CHIP 22uF 20% 10V
C521	1-164-156-11	s	CERAMIC 0.1uF 25V
C522	1-104-851-11	s	TANTALUM, CHIP 10uF 20% 10V
C523	1-104-851-11	s	TANTALUM, CHIP 10uF 20% 10V
C524	1-164-156-11	s	CERAMIC 0.1uF 25V
C525	1-164-156-11	s	CERAMIC 0.1uF 25V
C526	1-164-156-11	s	CERAMIC 0.1uF 25V
C527	1-164-156-11	s	CERAMIC 0.1uF 25V
C528	1-104-852-11	s	TANTALUM, CHIP 22uF 20% 10V
C529	1-164-156-11	s	CERAMIC 0.1uF 25V
C530	1-162-927-11	s	CERAMIC, CHIP 100PF 5% 50V
C531	1-164-156-11	s	CERAMIC 0.1uF 25V
C532	1-164-156-11	s	CERAMIC 0.1uF 25V
C533	1-164-156-11	s	CERAMIC 0.1uF 25V
C534	1-162-927-11	s	CERAMIC, CHIP 100PF 5% 50V
C535	1-162-965-11	s	CERAMIC 0.0015uF 10% 50V
C536	1-162-927-11	s	CERAMIC, CHIP 100PF 5% 50V
C537	1-164-156-11	s	CERAMIC 0.1uF 25V
C538	1-162-927-11	s	CERAMIC, CHIP 100PF 5% 50V
C539	1-104-852-11	s	TANTALUM, CHIP 22uF 20% 10V
C542	1-164-156-11	s	CERAMIC 0.1uF 25V
C544	1-164-156-11	s	CERAMIC 0.1uF 25V
C546	1-104-852-11	s	TANTALUM, CHIP 22uF 20% 10V
C547	1-164-156-11	s	CERAMIC 0.1uF 25V
C548	1-164-156-11	s	CERAMIC 0.1uF 25V
C549	1-104-851-11	s	TANTALUM, CHIP 10uF 20% 10V
C550	1-104-851-11	s	TANTALUM, CHIP 10uF 20% 10V
C551	1-164-156-11	s	CERAMIC 0.1uF 25V
C555	1-162-957-11	s	CERAMIC 220PF 5% 50V
C556	1-162-957-11	s	CERAMIC 220PF 5% 50V
C557	1-135-177-21	s	TANTALUM, CHIP 1uF 10% 25V
C558	1-164-156-11	s	CERAMIC 0.1uF 25V
C559	1-164-156-11	s	CERAMIC 0.1uF 25V
C560	1-135-177-21	s	TANTALUM, CHIP 1uF 10% 25V
C561	1-164-156-11	s	CERAMIC 0.1uF 25V
C562	1-135-177-21	s	TANTALUM, CHIP 1uF 10% 25V
C563	1-135-177-21	s	TANTALUM, CHIP 1uF 10% 25V
C564	1-135-177-21	s	TANTALUM, CHIP 1uF 10% 25V
C600	1-162-923-11	s	CERAMIC, CHIP 47PF 5% 50V
C601	1-135-177-21	s	TANTALUM, CHIP 1uF 10% 25V
C602	1-135-177-21	s	TANTALUM, CHIP 1uF 10% 25V

(VDA-31 BOARD)

Ref. No. or Q'ty	Part No.	SP	Description
C701	1-104-851-11	s	TANTALUM, CHIP 10uF 20% 10V
C702	1-104-851-11	s	TANTALUM, CHIP 10uF 20% 10V
C703	1-164-156-11	s	CERAMIC 0.1uF 25V
C704	1-164-156-11	s	CERAMIC 0.1uF 25V
C705	1-162-905-11	s	CERAMIC 1PF 0.25PF 50V
C706	1-162-927-11	s	CERAMIC, CHIP 100PF 5% 50V
C707	1-164-156-11	s	CERAMIC 0.1uF 25V
C708	1-164-156-11	s	CERAMIC 0.1uF 25V
C709	1-162-905-11	s	CERAMIC 1PF 0.25PF 50V
C710	1-162-927-11	s	CERAMIC, CHIP 100PF 5% 50V
C801	1-104-851-11	s	TANTALUM, CHIP 10uF 20% 10V
C802	1-104-851-11	s	TANTALUM, CHIP 10uF 20% 10V
C803	1-164-156-11	s	CERAMIC 0.1uF 25V
C804	1-164-156-11	s	CERAMIC 0.1uF 25V
C805	1-164-156-11	s	CERAMIC 0.1uF 25V
CN101	1-569-301-11	s	PIN, CONNECTOR (PC BOARD) 5P
CN102	1-569-301-11	s	PIN, CONNECTOR (PC BOARD) 5P
CN301	1-569-301-11	s	PIN, CONNECTOR (PC BOARD) 5P
CN302	1-569-301-11	s	PIN, CONNECTOR (PC BOARD) 5P
D501	8-719-421-27	s	DIODE MA728
D502	8-719-421-27	s	DIODE MA728
D503	8-719-421-27	s	DIODE MA728
D504	8-719-059-52	s	DIODE MA3J14300LSO
D505	8-719-059-52	s	DIODE MA3J14300LSO
D601	8-719-059-52	s	DIODE MA3J14300LSO
DL101	1-415-883-11	s	DELAY LINE
DL301	1-415-883-11	s	DELAY LINE
FL101	1-233-603-21	s	FILTER (SMD), LOW PASS
FL201	1-233-603-21	s	FILTER (SMD), LOW PASS
FL301	1-233-603-21	s	FILTER (SMD), LOW PASS
FL401	1-233-604-21	s	FILTER (SMD), LOW PASS
FL402	1-233-605-21	s	FILTER (SMD), LOW PASS
FL403	1-233-604-21	s	FILTER (SMD), LOW PASS
FL701	1-233-604-21	s	FILTER (SMD), LOW PASS
FL702	1-233-604-21	s	FILTER (SMD), LOW PASS
IC1	8-759-058-62	s	IC TC7S08FU(TE85R)
IC2	8-759-058-62	s	IC TC7S08FU(TE85R)
IC3	8-759-173-16	s	IC TL062CPW
IC4	8-759-058-62	s	IC TC7S08FU(TE85R)
IC5	8-759-185-42	s	IC LM4040AIM3-2.5
IC6	8-759-058-62	s	IC TC7S08FU(TE85R)
IC7	8-759-058-62	s	IC TC7S08FU(TE85R)
IC101	8-759-054-61	s	IC CLC505AJE
IC103	8-759-054-61	s	IC CLC505AJE
IC104	8-759-066-59	s	IC TC74HC4053AFS
IC105	8-752-061-02	s	IC CXA1450M
IC106	8-759-054-61	s	IC CLC505AJE
IC201	8-759-054-61	s	IC CLC505AJE
IC202	8-759-054-61	s	IC CLC505AJE
IC203	8-759-054-61	s	IC CLC505AJE
IC204	8-759-066-59	s	IC TC74HC4053AFS
IC205	8-752-061-02	s	IC CXA1450M
IC206	8-759-054-61	s	IC CLC505AJE
IC301	8-759-054-61	s	IC CLC505AJE
IC303	8-759-054-61	s	IC CLC505AJE
IC304	8-759-066-59	s	IC TC74HC4053AFS
IC305	8-752-061-02	s	IC CXA1450M

(VDA-31 BOARD)

Ref. No. or Q'ty	Part No.	SP	Description
IC306	8-759-054-61	s	IC CLC505AJE
IC401	8-759-054-61	s	IC CLC505AJE
IC402	8-759-054-61	s	IC CLC505AJE
IC403	8-759-054-61	s	IC CLC505AJE
IC404	8-759-054-61	s	IC CLC505AJE
IC405	8-759-054-61	s	IC CLC505AJE
IC406	8-759-054-61	s	IC CLC505AJE
IC501	8-759-066-59	s	IC TC74HC4053AFS
IC502	8-759-066-59	s	IC TC74HC4053AFS
IC503	8-759-054-61	s	IC CLC505AJE
IC504	8-759-066-59	s	IC TC74HC4053AFS
IC505	8-759-054-61	s	IC CLC505AJE
IC506	8-759-054-61	s	IC CLC505AJE
IC507	8-759-054-61	s	IC CLC505AJE
IC508	8-752-052-73	s	IC CXA1451M
IC509	8-759-058-62	s	IC TC7S08FU(TE85R)
IC510	8-759-058-54	s	IC TC7S00FU(TE85R)
IC511	8-759-066-59	s	IC TC74HC4053AFS
IC512	8-759-054-61	s	IC CLC505AJE
IC513	8-759-054-61	s	IC CLC505AJE
IC514	8-759-066-59	s	IC TC74HC4053AFS
IC515	8-759-066-59	s	IC TC74HC4053AFS
IC516	8-759-082-61	s	IC TC4W53FU
IC520	8-759-058-62	s	IC TC7S08FU(TE85R)
IC521	8-759-271-18	s	IC NJM1496V
IC522	8-759-173-16	s	IC TL062CPW
IC523	8-759-058-54	s	IC TC7S00FU(TE85R)
IC601	8-759-058-55	s	IC TC7S02FU-TE85L
IC602	8-759-058-64	s	IC TC7S32FU(TE85R)
IC701	8-759-054-61	s	IC CLC505AJE
IC702	8-759-054-61	s	IC CLC505AJE
IC703	8-759-066-59	s	IC TC74HC4053AFS
IC801	8-759-349-46	s	IC TLC339CPW-E05
IC802	8-759-147-84	s	IC CXD8072Q
IC803	8-759-086-41	s	IC X24C02S-3.0
IC804	8-759-058-55	s	IC TC7S02FU-TE85L
L101	1-412-026-11	s	INDUCTOR CHIP 1uH
L102	1-412-026-11	s	INDUCTOR CHIP 1uH
L401	1-412-026-11	s	INDUCTOR CHIP 1uH
L402	1-412-026-11	s	INDUCTOR CHIP 1uH
L501	1-412-026-11	s	INDUCTOR CHIP 1uH
L502	1-412-026-11	s	INDUCTOR CHIP 1uH
L701	1-412-026-11	s	INDUCTOR CHIP 1uH
L702	1-412-026-11	s	INDUCTOR CHIP 1uH
Q1	8-729-820-86	s	TRANSISTOR 2SB1121-ST
Q2	8-729-820-90	s	TRANSISTOR 2SD1621-ST
Q3	8-729-117-32	s	TRANSISTOR 2SC4177
Q4	8-729-117-16	s	TRANSISTOR 2SA1611-M6
Q101	8-765-930-08	s	TRANSISTOR 3SK163-2
Q102	8-765-930-08	s	TRANSISTOR 3SK163-2
Q201	8-765-930-08	s	TRANSISTOR 3SK163-2
Q202	8-765-930-08	s	TRANSISTOR 3SK163-2
Q301	8-765-930-08	s	TRANSISTOR 3SK163-2
Q302	8-765-930-08	s	TRANSISTOR 3SK163-2
Q501	8-729-143-07	s	TRANSISTOR 2SA1610-Y33
Q502	8-729-143-14	s	TRANSISTOR 2SC4176-B35
Q503	8-729-143-14	s	TRANSISTOR 2SC4176-B35
Q504	8-729-143-07	s	TRANSISTOR 2SA1610-Y33

http://getMANUAL.com

(VDA-31 BOARD)

Ref. No. or Q'ty	Part No.	SP	Description
Q505	8-729-143-07	s	TRANSISTOR 2SA1610-Y33
Q506	8-729-143-14	s	TRANSISTOR 2SC4176-B35
Q507	8-729-143-14	s	TRANSISTOR 2SC4176-B35
Q508	8-729-143-14	s	TRANSISTOR 2SC4176-B35
Q509	8-729-143-14	s	TRANSISTOR 2SC4176-B35
Q510	8-729-143-14	s	TRANSISTOR 2SC4176-B35
Q511	8-729-143-14	s	TRANSISTOR 2SC4176-B35
Q512	8-729-143-14	s	TRANSISTOR 2SC4176-B35
Q513	8-729-143-14	s	TRANSISTOR 2SC4176-B35
Q514	8-729-143-14	s	TRANSISTOR 2SC4176-B35
Q515	8-729-143-14	s	TRANSISTOR 2SC4176-B35
Q516	8-729-143-14	s	TRANSISTOR 2SC4176-B35
Q517	8-729-143-14	s	TRANSISTOR 2SC4176-B35
Q518	8-729-143-14	s	TRANSISTOR 2SC4176-B35
Q519	8-729-143-14	s	TRANSISTOR 2SC4176-B35
Q520	8-729-143-14	s	TRANSISTOR 2SC4176-B35
Q521	8-729-143-14	s	TRANSISTOR 2SC4176-B35
Q801	8-729-143-07	s	TRANSISTOR 2SA1610-Y33
Q802	8-729-143-07	s	TRANSISTOR 2SA1610-Y33
Q803	8-729-143-07	s	TRANSISTOR 2SA1610-Y33
Q804	8-729-143-07	s	TRANSISTOR 2SA1610-Y33
Q805	8-729-928-90	s	TRANSISTOR DTC114EE
R1	1-218-728-11	s	METAL 33K 0.50% 1/16W
R2	1-218-728-11	s	METAL 33K 0.50% 1/16W
R3	1-218-716-11	s	METAL 10K 0.50% 1/16W
R4	1-218-728-11	s	METAL 33K 0.50% 1/16W
R5	1-218-728-11	s	METAL 33K 0.50% 1/16W
R6	1-218-716-11	s	METAL 10K 0.50% 1/16W
R7	1-218-664-11	s	CHIP, METAL 68 0.50% 1/16W
R8	1-218-664-11	s	CHIP, METAL 68 0.50% 1/16W
R9	1-218-676-11	s	METAL 220 0.50% 1/16W
R10	1-218-675-11	s	CHIP, METAL 200 0.50% 1/16W
R11	1-218-675-11	s	CHIP, METAL 200 0.50% 1/16W
R12	1-218-676-11	s	METAL 220 0.50% 1/16W
R13	1-218-692-11	s	CHIP, METAL 1K 0.50% 1/16W
R14	1-218-692-11	s	CHIP, METAL 1K 0.50% 1/16W
R15	1-218-692-11	s	CHIP, METAL 1K 0.50% 1/16W
R16	1-218-692-11	s	CHIP, METAL 1K 0.50% 1/16W
R17	1-218-716-11	s	METAL 10K 0.50% 1/16W
R18	1-218-728-11	s	METAL 33K 0.50% 1/16W
R19	1-218-716-11	s	METAL 10K 0.50% 1/16W
R20	1-218-716-11	s	METAL 10K 0.50% 1/16W
R21	1-218-724-11	s	CHIP, METAL 22K 5% 1/16W
R22	1-218-724-11	s	CHIP, METAL 22K 5% 1/16W
R23	1-218-701-11	s	METAL 2.4K 0.50% 1/16W
R24	1-218-728-11	s	METAL 33K 0.50% 1/16W
R25	1-218-699-11	s	CHIP, METAL 2K 0.50% 1/16W
R26	1-218-728-11	s	METAL 33K 0.50% 1/16W
R27	1-218-692-11	s	CHIP, METAL 1K 0.50% 1/16W
R28	1-218-728-11	s	METAL 33K 0.50% 1/16W
R29	1-218-728-11	s	METAL 33K 0.50% 1/16W
R30	1-218-692-11	s	CHIP, METAL 1K 0.50% 1/16W
R31	1-218-692-11	s	CHIP, METAL 1K 0.50% 1/16W
R32	1-218-692-11	s	CHIP, METAL 1K 0.50% 1/16W
R33	1-218-716-11	s	METAL 10K 0.50% 1/16W
R34	1-218-728-11	s	METAL 33K 0.50% 1/16W
R35	1-218-728-11	s	METAL 33K 0.50% 1/16W
R36	1-216-864-11	s	METAL, CHIP 0 5% 1/16W

(VDA-31 BOARD)

Ref. No. or Q'ty	Part No.	SP	Description
R38	1-218-728-11	s	METAL 33K 0.50% 1/16W
R39	1-218-711-11	s	METAL 6.2K 0.50% 1/16W
R40	1-218-716-11	s	METAL 10K 0.50% 1/16W
R101	1-218-666-11	s	METAL 82 0.50% 1/16W
R102	1-216-791-11	s	METAL, CHIP 3.3 5% 1/16W
R103	1-218-685-11	s	METAL 510 0.50% 1/16W
R104	1-218-692-11	s	CHIP, METAL 1K 0.50% 1/16W
R105	1-218-692-11	s	CHIP, METAL 1K 0.50% 1/16W
R106	1-218-692-11	s	CHIP, METAL 1K 0.50% 1/16W
R107	1-218-745-11	s	CHIP, METAL 160K 0.50% 1/16W
R111	1-218-668-11	s	CHIP, METAL 100 0.50% 1/16W
R112	1-218-697-11	s	METAL 1.6K 0.50% 1/16W
R113	1-218-691-11	s	CHIP, METAL 910 0.50% 1/16W
R114	1-218-745-11	s	CHIP, METAL 160K 0.50% 1/16W
R115	1-218-652-11	s	CHIP, METAL 22 0.50% 1/16W
R116	1-218-692-11	s	CHIP, METAL 1K 0.50% 1/16W
R117	1-218-668-11	s	CHIP, METAL 100 0.50% 1/16W
R118	1-218-676-11	s	METAL 220 0.50% 1/16W
R119	1-218-738-11	s	CHIP, METAL 82K 0.50% 1/16W
R120	1-218-665-11	s	CHIP, METAL 75 0.50% 1/16W
R121	1-218-692-11	s	CHIP, METAL 1K 0.50% 1/16W
R122	1-218-701-11	s	METAL 2.4K 0.50% 1/16W
R123	1-218-748-11	s	CHIP, METAL 220K 0.50% 1/16W
R124	1-218-740-11	s	METAL 100K 0.50% 1/16W
R126	1-218-716-11	s	METAL 10K 0.50% 1/16W
R128	1-218-724-11	s	CHIP, METAL 22K 5% 1/16W
R129	1-218-716-11	s	METAL 10K 0.50% 1/16W
R130	1-218-678-11	s	CHIP, METAL 270 0.50% 1/16W
R131	1-218-651-11	s	METAL 20 0.50% 1/16W
R132	1-218-691-11	s	CHIP, METAL 910 0.50% 1/16W
R133	1-216-864-11	s	METAL, CHIP 0 5% 1/16W
R135	1-218-688-11	s	METAL 680 0.50% 1/16W
R136	1-218-716-11	s	METAL 10K 0.50% 1/16W
R137	1-218-700-11	s	METAL 2.2K 0.50% 1/16W
R138	1-218-704-11	s	METAL 3.3K 0.50% 1/16W
R139	1-218-714-11	s	METAL 8.2K 0.50% 1/16W
R150	1-218-644-11	s	METAL 10 0.50% 1/16W
R151	1-218-716-11	s	METAL 10K 0.50% 1/16W
R152	1-218-824-11	s	CHIP, METAL 110 0.50% 1/16W
R153	1-218-690-11	s	CHIP, METAL 820 0.50% 1/16W
R201	1-218-666-11	s	METAL 82 0.50% 1/16W
R202	1-216-791-11	s	METAL, CHIP 3.3 5% 1/16W
R203	1-218-685-11	s	METAL 510 0.50% 1/16W
R204	1-218-692-11	s	CHIP, METAL 1K 0.50% 1/16W
R205	1-218-692-11	s	CHIP, METAL 1K 0.50% 1/16W
R206	1-218-692-11	s	CHIP, METAL 1K 0.50% 1/16W
R207	1-218-745-11	s	CHIP, METAL 160K 0.50% 1/16W
R208	1-218-692-11	s	CHIP, METAL 1K 0.50% 1/16W
R209	1-218-691-11	s	CHIP, METAL 910 0.50% 1/16W
R210	1-218-745-11	s	CHIP, METAL 160K 0.50% 1/16W
R211	1-218-707-11	s	CHIP, METAL 4.3K 0.50% 1/16W
R212	1-218-694-11	s	CHIP, METAL 1.2K 0.50% 1/16W
R213	1-218-717-11	s	CHIP, METAL 11K 0.50% 1/16W
R214	1-218-682-11	s	METAL 390 0.50% 1/16W
R215	1-218-675-11	s	CHIP, METAL 200 0.50% 1/16W
R216	1-218-684-11	s	CHIP, METAL 470 0.50% 1/16W
R217	1-218-653-11	s	METAL 24 0.50% 1/16W
R218	1-218-654-11	s	CHIP, METAL 27 0.50% 1/16W
R219	1-218-654-11	s	CHIP, METAL 27 0.50% 1/16W

(VDA-31 BOARD)

Ref. No. or Q'ty	Part No.	SP	Description
R220	1-218-691-11	s	CHIP, METAL 910 0.50% 1/16W
R221	1-218-745-11	s	CHIP, METAL 160K 0.50% 1/16W
R222	1-218-652-11	s	CHIP, METAL 22 0.50% 1/16W
R223	1-218-692-11	s	CHIP, METAL 1K 0.50% 1/16W
R224	1-218-668-11	s	CHIP, METAL 100 0.50% 1/16W
R225	1-218-676-11	s	METAL 220 0.50% 1/16W
R226	1-218-738-11	s	CHIP, METAL 82K 0.50% 1/16W
R227	1-218-665-11	s	CHIP, METAL 75 0.50% 1/16W
R228	1-218-692-11	s	CHIP, METAL 1K 0.50% 1/16W
R229	1-218-701-11	s	METAL 2.4K 0.50% 1/16W
R230	1-218-748-11	s	CHIP, METAL 220K 0.50% 1/16W
R231	1-218-740-11	s	METAL 100K 0.50% 1/16W
R233	1-218-716-11	s	METAL 10K 0.50% 1/16W
R234	1-218-724-11	s	CHIP, METAL 22K 5% 1/16W
R236	1-218-716-11	s	METAL 10K 0.50% 1/16W
R240	1-218-678-11	s	CHIP, METAL 270 0.50% 1/16W
R241	1-218-651-11	s	METAL 20 0.50% 1/16W
R242	1-218-691-11	s	CHIP, METAL 910 0.50% 1/16W
R243	1-216-864-11	s	METAL, CHIP 0 5% 1/16W
R244	1-218-688-11	s	METAL 680 0.50% 1/16W
R245	1-218-716-11	s	METAL 10K 0.50% 1/16W
R246	1-218-700-11	s	METAL 2.2K 0.50% 1/16W
R247	1-218-704-11	s	METAL 3.3K 0.50% 1/16W
R248	1-218-714-11	s	METAL 8.2K 0.50% 1/16W
R250	1-218-644-11	s	METAL 10 0.50% 1/16W
R251	1-218-716-11	s	METAL 10K 0.50% 1/16W
R301	1-218-666-11	s	METAL 82 0.50% 1/16W
R302	1-216-791-11	s	METAL, CHIP 3.3 5% 1/16W
R303	1-218-685-11	s	METAL 510 0.50% 1/16W
R304	1-218-692-11	s	CHIP, METAL 1K 0.50% 1/16W
R305	1-218-692-11	s	CHIP, METAL 1K 0.50% 1/16W
R306	1-218-692-11	s	CHIP, METAL 1K 0.50% 1/16W
R307	1-218-745-11	s	CHIP, METAL 160K 0.50% 1/16W
R311	1-218-668-11	s	CHIP, METAL 100 0.50% 1/16W
R312	1-218-697-11	s	METAL 1.6K 0.50% 1/16W
R313	1-218-689-11	s	CHIP, METAL 750 0.50% 1/16W
R314	1-218-745-11	s	CHIP, METAL 160K 0.50% 1/16W
R315	1-218-652-11	s	CHIP, METAL 22 0.50% 1/16W
R316	1-218-692-11	s	CHIP, METAL 1K 0.50% 1/16W
R317	1-218-668-11	s	CHIP, METAL 100 0.50% 1/16W
R318	1-218-676-11	s	METAL 220 0.50% 1/16W
R319	1-218-738-11	s	CHIP, METAL 82K 0.50% 1/16W
R320	1-218-665-11	s	CHIP, METAL 75 0.50% 1/16W
R321	1-218-692-11	s	CHIP, METAL 1K 0.50% 1/16W
R322	1-218-701-11	s	METAL 2.4K 0.50% 1/16W
R323	1-218-748-11	s	CHIP, METAL 220K 0.50% 1/16W
R324	1-218-740-11	s	METAL 100K 0.50% 1/16W
R326	1-218-716-11	s	METAL 10K 0.50% 1/16W
R328	1-218-724-11	s	CHIP, METAL 22K 5% 1/16W
R329	1-218-716-11	s	METAL 10K 0.50% 1/16W
R330	1-218-678-11	s	CHIP, METAL 270 0.50% 1/16W
R331	1-218-651-11	s	METAL 20 0.50% 1/16W
R332	1-218-691-11	s	CHIP, METAL 910 0.50% 1/16W
R333	1-216-864-11	s	METAL, CHIP 0 5% 1/16W
R335	1-218-688-11	s	METAL 680 0.50% 1/16W
R336	1-218-716-11	s	METAL 10K 0.50% 1/16W
R337	1-218-700-11	s	METAL 2.2K 0.50% 1/16W
R338	1-218-704-11	s	METAL 3.3K 0.50% 1/16W
R339	1-218-714-11	s	METAL 8.2K 0.50% 1/16W

(VDA-31 BOARD)

Ref. No. or Q'ty	Part No.	SP	Description
R350	1-218-644-11	s	METAL 10 0.50% 1/16W
R351	1-218-716-11	s	METAL 10K 0.50% 1/16W
R352	1-218-824-11	s	CHIP, METAL 110 0.50% 1/16W
R353	1-218-690-11	s	CHIP, METAL 820 0.50% 1/16W
R401	1-218-692-11	s	CHIP, METAL 1K 0.50% 1/16W
R402	1-218-692-11	s	CHIP, METAL 1K 0.50% 1/16W
R403	1-218-716-11	s	METAL 10K 0.50% 1/16W
R404	1-218-692-11	s	CHIP, METAL 1K 0.50% 1/16W
R405	1-218-692-11	s	CHIP, METAL 1K 0.50% 1/16W
R406	1-218-716-11	s	METAL 10K 0.50% 1/16W
R407	1-218-692-11	s	CHIP, METAL 1K 0.50% 1/16W
R408	1-218-692-11	s	CHIP, METAL 1K 0.50% 1/16W
R409	1-218-716-11	s	METAL 10K 0.50% 1/16W
R410	1-218-692-11	s	CHIP, METAL 1K 0.50% 1/16W
R411	1-218-692-11	s	CHIP, METAL 1K 0.50% 1/16W
R412	1-218-692-11	s	CHIP, METAL 1K 0.50% 1/16W
R413	1-218-692-11	s	CHIP, METAL 1K 0.50% 1/16W
R414	1-218-745-11	s	CHIP, METAL 160K 0.50% 1/16W
R415	1-218-692-11	s	CHIP, METAL 1K 0.50% 1/16W
R416	1-218-745-11	s	CHIP, METAL 160K 0.50% 1/16W
R417	1-218-692-11	s	CHIP, METAL 1K 0.50% 1/16W
R418	1-218-745-11	s	CHIP, METAL 160K 0.50% 1/16W
R419	1-218-680-11	s	METAL 330 0.50% 1/16W
R420	1-218-680-11	s	METAL 330 0.50% 1/16W
R421	1-218-680-11	s	METAL 330 0.50% 1/16W
R422	1-218-692-11	s	CHIP, METAL 1K 0.50% 1/16W
R423	1-218-680-11	s	METAL 330 0.50% 1/16W
R424	1-218-692-11	s	CHIP, METAL 1K 0.50% 1/16W
R425	1-218-658-11	s	METAL 39 0.50% 1/16W
R426	1-218-680-11	s	METAL 330 0.50% 1/16W
R427	1-218-658-11	s	METAL 39 0.50% 1/16W
R428	1-218-692-11	s	CHIP, METAL 1K 0.50% 1/16W
R429	1-218-692-11	s	CHIP, METAL 1K 0.50% 1/16W
R430	1-218-745-11	s	CHIP, METAL 160K 0.50% 1/16W
R431	1-218-680-11	s	METAL 330 0.50% 1/16W
R432	1-218-692-11	s	CHIP, METAL 1K 0.50% 1/16W
R433	1-218-745-11	s	CHIP, METAL 160K 0.50% 1/16W
R434	1-218-658-11	s	METAL 39 0.50% 1/16W
R435	1-218-692-11	s	CHIP, METAL 1K 0.50% 1/16W
R436	1-218-745-11	s	CHIP, METAL 160K 0.50% 1/16W
R501	1-218-698-11	s	METAL 1.8K 0.50% 1/16W
R502	1-218-698-11	s	METAL 1.8K 0.50% 1/16W
R503	1-218-698-11	s	METAL 1.8K 0.50% 1/16W
R504	1-218-698-11	s	METAL 1.8K 0.50% 1/16W
R505	1-218-708-11	s	METAL 4.7K 0.50% 1/16W
R506	1-218-750-11	s	METAL 270K 0.50% 1/16W
R507	1-218-745-11	s	CHIP, METAL 160K 0.50% 1/16W
R508	1-218-745-11	s	CHIP, METAL 160K 0.50% 1/16W
R509	1-218-693-11	s	CHIP, METAL 1.1K 0.50% 1/16W
R510	1-218-851-11	s	CHIP, METAL 1.5K 0.50% 1/16W
R511	1-218-665-11	s	CHIP, METAL 75 0.50% 1/16W
R512	1-218-665-11	s	CHIP, METAL 75 0.50% 1/16W
R513	1-218-652-11	s	CHIP, METAL 22 0.50% 1/16W
R514	1-218-652-11	s	CHIP, METAL 22 0.50% 1/16W
R515	1-218-702-11	s	CHIP, METAL 2.7K 0.50% 1/16W
R516	1-218-692-11	s	CHIP, METAL 1K 0.50% 1/16W
R517	1-218-692-11	s	CHIP, METAL 1K 0.50% 1/16W
R518	1-218-692-11	s	CHIP, METAL 1K 0.50% 1/16W
R519	1-218-651-11	s	METAL 20 0.50% 1/16W

(VDA-31 BOARD)

Ref. No. or Q'ty	Part No.	SP	Description
R520	1-218-692-11	s	CHIP, METAL 1K 0.50% 1/16W
R521	1-218-651-11	s	METAL 20 0.50% 1/16W
R522	1-218-692-11	s	CHIP, METAL 1K 0.50% 1/16W
R523	1-218-672-11	s	METAL 150 0.50% 1/16W
R524	1-218-652-11	s	CHIP, METAL 22 0.50% 1/16W
R525	1-218-724-11	s	CHIP, METAL 22K 5% 1/16W
R526	1-218-716-11	s	METAL 10K 0.50% 1/16W
R527	1-218-724-11	s	CHIP, METAL 22K 5% 1/16W
R528	1-218-716-11	s	METAL 10K 0.50% 1/16W
R529	1-218-724-11	s	CHIP, METAL 22K 5% 1/16W
R530	1-218-716-11	s	METAL 10K 0.50% 1/16W
R531	1-218-716-11	s	METAL 10K 0.50% 1/16W
R532	1-218-851-11	s	CHIP, METAL 1.5K 0.50% 1/16W
R533	1-218-851-11	s	CHIP, METAL 1.5K 0.50% 1/16W
R534	1-218-716-11	s	METAL 10K 0.50% 1/16W
R535	1-218-851-11	s	CHIP, METAL 1.5K 0.50% 1/16W
R536	1-216-789-11	s	METAL, CHIP 2.2 5% 1/16W
R537	1-218-708-11	s	METAL 4.7K 0.50% 1/16W
R538	1-218-692-11	s	CHIP, METAL 1K 0.50% 1/16W
R539	1-218-675-11	s	CHIP, METAL 200 0.50% 1/16W
R540	1-218-745-11	s	CHIP, METAL 160K 0.50% 1/16W
R541	1-218-704-11	s	METAL 3.3K 0.50% 1/16W
R542	1-218-704-11	s	METAL 3.3K 0.50% 1/16W
R543	1-218-704-11	s	METAL 3.3K 0.50% 1/16W
R544	1-218-704-11	s	METAL 3.3K 0.50% 1/16W
R545	1-218-704-11	s	METAL 3.3K 0.50% 1/16W
R546	1-218-745-11	s	CHIP, METAL 160K 0.50% 1/16W
R547	1-218-665-11	s	CHIP, METAL 75 0.50% 1/16W
R548	1-218-716-11	s	METAL 10K 0.50% 1/16W
R549	1-218-692-11	s	CHIP, METAL 1K 0.50% 1/16W
R550	1-218-745-11	s	CHIP, METAL 160K 0.50% 1/16W
R551	1-218-652-11	s	CHIP, METAL 22 0.50% 1/16W
R552	1-218-665-11	s	CHIP, METAL 75 0.50% 1/16W
R553	1-218-692-11	s	CHIP, METAL 1K 0.50% 1/16W
R554	1-218-692-11	s	CHIP, METAL 1K 0.50% 1/16W
R555	1-218-692-11	s	CHIP, METAL 1K 0.50% 1/16W
R556	1-218-692-11	s	CHIP, METAL 1K 0.50% 1/16W
R557	1-218-745-11	s	CHIP, METAL 160K 0.50% 1/16W
R558	1-218-692-11	s	CHIP, METAL 1K 0.50% 1/16W
R559	1-218-665-11	s	CHIP, METAL 75 0.50% 1/16W
R560	1-218-700-11	s	METAL 2.2K 0.50% 1/16W
R561	1-218-668-11	s	CHIP, METAL 100 0.50% 1/16W
R562	1-218-692-11	s	CHIP, METAL 1K 0.50% 1/16W
R563	1-218-724-11	s	CHIP, METAL 22K 5% 1/16W
R564	1-218-666-11	s	METAL 82 0.50% 1/16W
R565	1-218-692-11	s	CHIP, METAL 1K 0.50% 1/16W
R568	1-218-692-11	s	CHIP, METAL 1K 0.50% 1/16W
R569	1-218-685-11	s	METAL 510 0.50% 1/16W
R570	1-218-695-11	s	METAL 1.3K 0.50% 1/16W
R571	1-218-728-11	s	METAL 33K 0.50% 1/16W
R572	1-218-692-11	s	CHIP, METAL 1K 0.50% 1/16W
R573	1-218-692-11	s	CHIP, METAL 1K 0.50% 1/16W
R574	1-218-660-91	s	CHIP, METAL 47 0.50% 1/16W
R575	1-218-692-11	s	CHIP, METAL 1K 0.50% 1/16W
R576	1-218-651-11	s	METAL 20 0.50% 1/16W
R577	1-218-692-11	s	CHIP, METAL 1K 0.50% 1/16W
R578	1-218-680-11	s	METAL 330 0.50% 1/16W
R579	1-218-704-11	s	METAL 3.3K 0.50% 1/16W

(VDA-31 BOARD)

Ref. No. or Q'ty	Part No.	SP	Description
R580	1-218-716-11	s	METAL 10K 0.50% 1/16W
R581	1-218-668-11	s	CHIP, METAL 100 0.50% 1/16W
R582	1-218-702-11	s	CHIP, METAL 2.7K 0.50% 1/16W
R583	1-218-651-11	s	METAL 20 0.50% 1/16W
R584	1-218-699-11	s	CHIP, METAL 2K 0.50% 1/16W
R585	1-218-700-11	s	METAL 2.2K 0.50% 1/16W
R586	1-218-728-11	s	METAL 33K 0.50% 1/16W
R587	1-216-789-11	s	METAL, CHIP 2.2 5% 1/16W
R588	1-218-704-11	s	METAL 3.3K 0.50% 1/16W
R589	1-218-708-11	s	METAL 4.7K 0.50% 1/16W
R590	1-218-716-11	s	METAL 10K 0.50% 1/16W
R591	1-218-668-11	s	CHIP, METAL 100 0.50% 1/16W
R592	1-218-668-11	s	CHIP, METAL 100 0.50% 1/16W
R593	1-218-728-11	s	METAL 33K 0.50% 1/16W
R594	1-218-724-11	s	CHIP, METAL 22K 5% 1/16W
R595	1-218-704-11	s	METAL 3.3K 0.50% 1/16W
R596	1-218-692-11	s	CHIP, METAL 1K 0.50% 1/16W
R597	1-218-692-11	s	CHIP, METAL 1K 0.50% 1/16W
R598	1-218-652-11	s	CHIP, METAL 22 0.50% 1/16W
R599	1-218-652-11	s	CHIP, METAL 22 0.50% 1/16W
R600	1-218-660-91	s	CHIP, METAL 47 0.50% 1/16W
R601	1-218-698-11	s	METAL 1.8K 0.50% 1/16W
R602	1-218-719-11	s	METAL 13K 0.50% 1/16W
R603	1-218-716-11	s	METAL 10K 0.50% 1/16W
R604	1-218-730-11	s	CHIP, METAL 39K 0.50% 1/16W
R605	1-218-688-11	s	METAL 680 0.50% 1/16W
R606	1-218-720-11	s	METAL 15K 0.50% 1/16W
R607	1-218-716-11	s	METAL 10K 0.50% 1/16W
R608	1-218-683-11	s	CHIP, METAL 430 0.50% 1/16W
R609	1-218-713-11	s	CHIP, METAL 7.5K 0.50% 1/16W
R610	1-218-730-11	s	CHIP, METAL 39K 0.50% 1/16W
R611	1-218-716-11	s	METAL 10K 0.50% 1/16W
R612	1-218-692-11	s	CHIP, METAL 1K 0.50% 1/16W
R614	1-218-719-11	s	METAL 13K 0.50% 1/16W
R615	1-218-686-11	s	METAL 560 0.50% 1/16W
R616	1-218-668-11	s	CHIP, METAL 100 0.50% 1/16W
R617	1-218-720-11	s	METAL 15K 0.50% 1/16W
R618	1-218-686-11	s	METAL 560 0.50% 1/16W
R620	1-218-644-11	s	METAL 10 0.50% 1/16W
R621	1-218-660-91	s	CHIP, METAL 47 0.50% 1/16W
R701	1-218-676-11	s	METAL 220 0.50% 1/16W
R702	1-218-671-11	s	CHIP, METAL 130 0.50% 1/16W
R703	1-218-699-11	s	CHIP, METAL 2K 0.50% 1/16W
R704	1-218-692-11	s	CHIP, METAL 1K 0.50% 1/16W
R705	1-218-745-11	s	CHIP, METAL 160K 0.50% 1/16W
R706	1-218-676-11	s	METAL 220 0.50% 1/16W
R707	1-218-671-11	s	CHIP, METAL 130 0.50% 1/16W
R708	1-218-699-11	s	CHIP, METAL 2K 0.50% 1/16W
R709	1-218-692-11	s	CHIP, METAL 1K 0.50% 1/16W
R710	1-218-745-11	s	CHIP, METAL 160K 0.50% 1/16W
R801	1-218-740-11	s	METAL 100K 0.50% 1/16W
R802	1-218-740-11	s	METAL 100K 0.50% 1/16W
R803	1-218-740-11	s	METAL 100K 0.50% 1/16W
R804	1-218-679-91	s	CHIP, METAL 300 0.50% 1/16W
R805	1-218-716-11	s	METAL 10K 0.50% 1/16W
R806	1-218-716-11	s	METAL 10K 0.50% 1/16W
R807	1-218-709-11	s	METAL 5.1K 0.50% 1/16W
R808	1-218-709-11	s	METAL 5.1K 0.50% 1/16W
R809	1-218-692-11	s	CHIP, METAL 1K 0.50% 1/16W

(VDA-31 BOARD)

Ref. No. or Q'ty	Part No.	SP	Description
R810	1-218-692-11	s	CHIP, METAL 1K 0.50% 1/16W
R811	1-218-692-11	s	CHIP, METAL 1K 0.50% 1/16W
R812	1-218-740-11	s	METAL 100K 0.50% 1/16W
R813	1-218-740-11	s	METAL 100K 0.50% 1/16W
R814	1-218-740-11	s	METAL 100K 0.50% 1/16W
R815	1-218-668-11	s	CHIP, METAL 100 0.50% 1/16W
R816	1-218-668-11	s	CHIP, METAL 100 0.50% 1/16W
R817	1-218-740-11	s	METAL 100K 0.50% 1/16W
R818	1-218-740-11	s	METAL 100K 0.50% 1/16W
R819	1-218-716-11	s	METAL 10K 0.50% 1/16W
RV1	1-241-825-11	s	RES, ADJ, METAL 50
RV102	1-241-827-11	s	RES, ADJ, METAL 200
RV103	1-241-827-11	s	RES, ADJ, METAL 200
RV201	1-241-827-11	s	RES, ADJ, METAL 200
RV202	1-241-827-11	s	RES, ADJ, METAL 200
RV302	1-241-827-11	s	RES, ADJ, METAL 200
RV303	1-241-827-11	s	RES, ADJ, METAL 200
RV501	1-241-827-11	s	RES, ADJ, METAL 200
RV502	1-241-828-21	s	RES, ADJ, METAL 500
RV504	1-241-828-21	s	RES, ADJ, METAL 500
RV701	1-241-827-11	s	RES, ADJ, METAL 200
RV702	1-241-827-11	s	RES, ADJ, METAL 200

1-4. HDC-700 Frame

Ref. No. or Q'ty	Part No.	SP	Description
	⚠ 1-466-411-21	s	CONVERTER UNIT, DC-DC
CB101	⚠ 1-533-514-31	s	BREAKER, CIRCUIT 1.25A 250V
CB102	⚠ 1-533-515-31	s	BREAKER, CIRCUIT 2.5A 250V
CN1	1-565-443-11	o	CONNECTOR, 10P, FEMALE "TRACKER"
CN2	1-562-222-21	s	CONNECTOR 6P FEMALE "RET CONTROL"
CN3	1-766-696-11	o	CONNECTOR, 8P FEMALE "REMOTE"
CN4	1-563-929-11	s	CONNECTOR, 4P, FEMALE "SCRIPT"
CN11	1-569-253-21	s	CONNECTOR, BNC, FEMALE "MONITOR"
CN12	1-569-253-21	s	CONNECTOR, BNC, FEMALE "PROMPTER"
CN101	1-777-205-21	s	CABLE ASSEMBLY, ENCAPSULATD
CN102	1-509-892-31	o	CONNECTOR 36P, MALE "LENS"
CN103	1-562-989-11	s	CONNECTOR, MULTI 25P, FEMALE "VF"
	1-562-580-21	o	CONTACT, FEMALE AWG24-28
CN104	1-563-159-11	s	CONNECTOR, 5P, FEMALE "INCOM/PGM1"
CN105	1-563-159-11	s	CONNECTOR, 5P, FEMALE "INCOM/PGM2"
CN106	⚠ 1-251-220-11	s	OUTLET, AC 3P, FEMALE
CN107	1-573-593-11	s	CONNECTOR, XLR 3P, MALE "MIC1 IN"
CN108	1-573-593-11	s	CONNECTOR, XLR 3P, MALE "MIC2 IN"
CN109	1-562-244-00	o	CONNECTOR, 26P, MALE "VTR"
CN110	1-568-181-11	s	CONNECTOR, 9P FEMALE "TRUNK LINE"
CN111	1-509-177-31	s	CONNECTOR, 4P FEMALE "DC IN"
CN112	1-777-059-11	o	CABLE ASSEMBLY,COAXIAL (SDI-A) "SERIAL OUT"
FAN1	1-698-106-11	s	MOTOR, DC BLUSHLESS FAN
FAN2	1-698-775-21	s	FAN, DC
FB101	1-543-824-11	s	CORE, TROIDAL
S101	⚠ 1-570-173-11	s	SELECTOR, POWER VOLTAGE
S103	⚠ 1-762-116-11	s	SWITCH, AC POWER "CAMERA POWER"
T100	⚠ 1-426-993-13	s	TRANSFORMER, POWER
COAXIAL CABLE (SDI-10 TO RX-28)			
	1-777-058-11	o	CABLE ASSEMBLY,COAXIAL
FLEXIBLE CARD WIRE (OHB TO CN13/MB-666)			
	1-777-661-11	s	WIRE, FLEXIBLE CARD (28 CORE)
FLEXIBLE CARD WIRE (CN1/AT-104 TO CN11/CN-1270)			
	1-777-662-11	s	WIRE, FLEXIBLE CARD (24 CORE)
HARNESS (AC)			
CN8F(TO CN-1270 BOARD)			
	⚠ 1-562-352-11	o	HOUSING, 2P
	⚠ 1-562-210-11	o	CONTACT, FEMALE AWG18-22
CN54F(TO CN-986 BOARD)			
	⚠ 1-562-211-11	o	HOUSING, 3P
	⚠ 1-562-210-11	o	CONTACT, FEMALE AWG18-22
HARNESS (BREAKER)			
CB101	⚠ 1-533-514-31	s	BREAKER, CIRCUIT 1.25A 250V
CB102	⚠ 1-533-515-31	s	BREAKER, CIRCUIT 2.5A 250V
CN51F(TO CN-986 BOARD)			
	⚠ 1-562-285-11	s	HOUSING, 4P
	⚠ 1-562-210-11	o	CONTACT, FEMALE AWG18-22
S101	⚠ 1-570-173-11	s	SELECTOR, POWER VOLTAGE

(HDC-700 FRAME)

Ref. No. or Q'ty	Part No.	SP	Description
HARNESS (CONNECTOR PANEL)			
CN17F(TO MB-666 BOARD)			
	1-580-591-11	o	HOUSING, 30P
	1-573-176-11	o	CONTACT, FEMALE AWG22-26
	1-580-599-11	o	CONTACT, FEMALE AWG26-30
CN44F(TO CN-988 BOARD)			
	1-580-578-11	s	HOUSING, 4P
	1-573-176-11	o	CONTACT, FEMALE AWG22-26
	1-580-599-11	o	CONTACT, FEMALE AWG26-30
CN45F(TO CN-989 BOARD)			
	1-580-589-11	o	HOUSING, 26P
	1-573-176-11	o	CONTACT, FEMALE AWG22-26
	1-580-599-11	o	CONTACT, FEMALE AWG26-30
HARNESS (DC)			
CN2F(TO CN-1270 BOARD)			
	1-580-591-11	o	HOUSING, 30P
	1-580-599-11	o	CONTACT, FEMALE AWG26-30
CN29F(TO MB-666 BOARD)			
	1-580-591-11	o	HOUSING, 30P
	1-580-599-11	o	CONTACT, FEMALE AWG26-30
HARNESS (DC IN)			
CN111	1-509-177-31	s	CONNECTOR, 4P FEMALE "DC IN"
CN3F(TO CN-1280 BOARD)			
	1-580-586-11	o	HOUSING, 20P
	1-573-176-11	o	CONTACT, FEMALE AWG22-26
CN7(TO CN-1270 BOARD)			
	1-562-210-11	o	CONTACT, FEMALE AWG18-22
	1-562-285-11	o	HOUSING, 4P
CN14F(TO MB-666 BOARD)			
	1-580-586-11	o	HOUSING, 20P
	1-573-176-11	o	CONTACT, FEMALE AWG22-26
HARNESS (INCOM)			
CN24F(TO MB-666 BOARD)			
	1-695-214-11	o	HOUSING, 15P
	1-695-215-11	o	CONTACT, FEMALE
CN25F(TO MB-666 BOARD)			
	1-695-214-11	o	HOUSING, 15P
	1-695-215-11	o	CONTACT, FEMALE
CN46F(TO SW-706 BOARD)			
	1-580-591-11	o	HOUSING, 30P
	1-573-176-11	o	CONTACT, FEMALE AWG22-26
	1-580-599-11	o	CONTACT, FEMALE AWG26-30
HARNESS (INCOM XLR)			
CN104	1-563-159-11	s	CONNECTOR, 5P, FEMALE "INCOM/PGM"
CN61F(TO SW-706 BOARD)			
	1-569-203-11	o	HOUSING, 10P
	1-569-192-11	o	CONTACT, FEMALE AWG22-26
	1-569-194-11	o	CONTACT, FEMALE AWG24-30
HARNESS (INCOM XLR)			
CN105	1-563-159-11	s	CONNECTOR, 5P, FEMALE "INCOM/PGM"
CN62F(TO SW-706 BOARD)			
	1-569-203-11	o	HOUSING, 10P
	1-569-192-11	o	CONTACT, FEMALE AWG22-26
	1-569-194-11	o	CONTACT, FEMALE AWG24-30
HARNESS (LENS)			
CN102	1-509-892-31	o	CONNECTOR 36P, MALE "LENS"
CN19F(TO MB-666 BOARD)			
	1-580-591-11	o	HOUSING, 30P
	1-573-176-11	o	CONTACT, FEMALE AWG22-26
	1-580-599-11	o	CONTACT, FEMALE AWG26-30

(HDC-700 FRAME)

Ref. No. or Q'ty	Part No.	SP	Description
HARNESS (MICROPHONE)			
CN26F(TO MB-666 BOARD)			
	1-695-213-11	o	HOUSING 7P
	1-695-215-11	o	CONTACT, FEMALE
CN43F(TO CN-1239 BOARD)			
	1-580-582-11	o	HOUSING, 12P
	1-573-176-11	o	CONTACT, FEMALE AWG22-26
	1-580-599-11	o	CONTACT, FEMALE AWG26-30
HARNESS (PANEL IF)			
CN3F(TO CN-1270 BOARD)			
	1-580-586-11	o	HOUSING, 20P
	1-580-599-11	o	CONTACT, FEMALE AWG26-30
CN30F(TO MB-666 BOARD)			
	1-580-586-11	o	HOUSING, 20P
	1-580-599-11	o	CONTACT, FEMALE AWG26-30
HARNESS (PS-CONNECT)			
	1-955-796-11	o	HARNESS(PS-CONNECT)
CN3F(TO PS-416 BOARD)			
	1-580-582-11	o	HOUSING, 12P
	1-580-599-11	o	CONTACT, FEMALE AWG26-30
CN4F(TO PS-416 BOARD)			
	1-580-580-11	o	HOUSING, 8P
	1-580-599-11	o	CONTACT, FEMALE AWG26-30
CN5F(TO PS-416 BOARD)			
	1-562-640-11	o	HOUSING, 8P
	1-562-210-11	o	CONTACT, FEMALE AWG18-22
CN6F(TO PS-416 BOARD)			
	1-580-580-11	o	HOUSING, 8P
	1-580-599-11	o	CONTACT, FEMALE AWG26-30
FB101	1-543-824-11	s	CORE, TROIDAL
S103 ⚠	1-762-116-11	s	SWITCH, AC POWER "CAMERA POWER"
HARNESS (PS-SW)			
⚠	1-953-630-11	o	HARNESS (PS-SW)
CB103 ⚠	1-533-516-61	s	BREAKER, CIRCUIT 15A 250V
CN1F(TO PS-416 BOARD)			
⚠	1-562-352-11	o	HOUSING, 2P
⚠	1-562-210-11	o	CONTACT, FEMALE AWG18-22
CN2F(TO PS-416 BOARD)			
⚠	1-562-286-11	o	HOUSING, 5P
⚠	1-562-210-11	o	CONTACT, FEMALE AWG18-22
HARNESS (SDI)			
CN2F(TO RX-28 BOARD)			
	1-695-212-11	o	HOUSING, 6P
	1-695-215-11	o	CONTACT, FEMALE
CN2F(TO SDI-10 BOARD)			
	1-695-212-11	o	HOUSING, 6P
	1-695-215-11	o	CONTACT, FEMALE
HARNESS (UNREG)			
CN1F(TO CN-1270 BOARD)			
	1-580-582-11	o	HOUSING, 12P
	1-573-176-11	o	CONTACT, FEMALE AWG22-26
CN2F(TO CN-1280 BOARD)			
	1-580-582-11	o	HOUSING, 12P
	1-573-176-11	o	CONTACT, FEMALE AWG22-26
HARNESS (UP TALLY)			
CN1F(TO LE-172 BOARD)			
	1-569-196-11	o	HOUSING, 3P
	1-569-194-11	o	CONTACT, FEMALE AWG24-30
CN18F(TO MB-666 BOARD)			
	1-580-582-11	o	HOUSING, 12P
	1-580-599-11	o	CONTACT, FEMALE AWG26-30
CN(TO FAN1)			
	1-565-896-11	o	HOUSING, IL-M, 3P
	1-566-455-21	o	CONTACT, AWG22-28

(HDC-700 FRAME)

Ref. No. or Q'ty	Part No.	SP	Description
HARNESS (UTL(NTSC)			
	⚠ 1-953-632-11	o	HARNESS (UTL(NTSC))
CN106	⚠ 1-251-220-11	s	OUTLET, AC 3P, FEMALE
CN52F(TO CN-986 BOARD)			
	⚠ 1-562-352-11	o	HOUSING, 2P
	⚠ 1-562-210-11	o	CONTACT, FEMALE AWG18-22
HARNESS (VF)			
	1-955-862-11	o	HARNESS (VF)
CN103	1-562-989-11	s	CONNECTOR, MULTI 25P, FEMALE "VF"
	1-562-580-21	o	CONTACT, FEMALE AWG24-28
CN6F(TO CN-1270 BOARD)			
	1-580-582-11	o	HOUSING, 12P
	1-573-176-11	o	CONTACT, FEMALE AWG22-26
	1-580-599-11	o	CONTACT, FEMALE AWG26-30
CN15F(TO MB-666 BOARD)			
	1-580-586-11	o	HOUSING, 20P
	1-573-176-11	o	CONTACT, FEMALE AWG22-26
	1-580-599-11	o	CONTACT, FEMALE AWG26-30
HARNESS (VTR)			
CN109	1-562-244-00	o	CONNECTOR, 26P, MALE "VTR"
CN110	1-568-181-11	s	CONNECTOR, 9P FEMALE "TRUNK LINE"
CN22F(TO MB-666 BOARD)			
	1-580-591-11	o	HOUSING, 30P
	1-573-176-11	o	CONTACT, FEMALE AWG22-26
	1-580-599-11	o	CONTACT, FEMALE AWG26-30

1-5. HDC-750 Frame

Ref. No. or Q'ty	Part No.	SP	Description
C101	1-162-891-11	s	CAP, CERAMIC 1000PF
C102	1-162-891-11	s	CAP, CERAMIC 1000PF
C103	1-162-891-11	s	CAP, CERAMIC 1000PF
CN101	1-565-051-21	o	CONNECTOR(WITH C) 20P FEMALE"VF"
CN102	1-695-841-12	s	CONNECTOR, 12P FEMALE "LENS"
CN103	1-561-781-91	s	CONNECTOR, BNC, FEMALE "TEST"
CN104	1-509-184-51	s	CONNECTOR, 3P FEMALE "MIC"
FAN1	1-698-775-21	s	FAN, DC
FLEXIBLE CARD WIRE (CN16/MB-570 TO CN3/CN-1034)			
	1-777-169-11	o	CABLE, FLEXIBLE FLAT (30 CORE)
FLEXIBLE CARD WIRE (CN15/MB-570 TO CN2/CN-1034)			
	1-777-168-11	o	CABLE, FLEXIBLE FLAT (30 CORE)
FLEXIBLE CARD WIRE (OHB TO CN8/MB-570)			
	1-777-887-11	o	CABLE, FLEXIBLE FLAT (28 CORE)
HARNESS (CANCEL)			
CN1F(TO SW-696 BOARD)			
	1-764-193-11	o	HOUSING, 3P
	1-695-215-11	o	CONTACT, FEMALE
CN3F(TO SW-688 BOARD)			
	1-764-193-11	o	HOUSING, 3P
	1-695-215-11	o	CONTACT, FEMALE
HARNESS (FRONT)			
CN1F(TO SW-687 BOARD)			
	1-764-196-11	o	HOUSING, 8P
	1-695-215-11	o	CONTACT, FEMALE
CN1F(TO SW-688 BOARD)			
	1-764-196-11	o	HOUSING, 8P
	1-695-215-11	o	CONTACT, FEMALE
HARNESS (LENS)			
CN102	1-695-841-12	s	CONNECTOR, 12P FEMALE "LENS"
CN11F(TO MB-570 BOARD)			
	1-695-892-11	o	HOUSING, 12P
	1-695-215-11	o	CONTACT, FEMALE
HARNESS (MIC)			
CN104	1-563-029-21	s	CONNECTOR, XLR 3P, FEMALE "MIC"
CN6F(TO CN-1034 BOARD)			
	1-764-193-11	o	HOUSING, 3P
	1-695-215-11	o	CONTACT, FEMALE
HARNESS (MONI)			
CN1F(TO SW-806 BOARD)			
	1-695-212-11	o	HOUSING, 6P
	1-695-215-11	o	CONTACT, FEMALE
CN6F(TO MB-570 BOARD)			
	1-695-212-11	o	HOUSING, 6P
	1-695-215-11	o	CONTACT, FEMALE
HARNESS (RE)			
CN1F(TO SW-689 BOARD)			
	1-764-194-11	o	HOUSING, 4P
	1-695-215-11	o	CONTACT, FEMALE
CN2F(TO SW-688 BOARD)			
	1-764-194-11	o	HOUSING, 4P
	1-695-215-11	o	CONTACT, FEMALE
HARNESS (SIDE SW)			
CN1F(TO MB-570 BOARD)			
	1-764-200-11	o	HOUSING, 14P
	1-695-215-11	o	CONTACT, FEMALE
CN4F(TO SW-688 BOARD)			
	1-764-200-11	o	HOUSING, 14P
	1-695-215-11	o	CONTACT, FEMALE

1-6. HDCA-750 Frame

(HDC-750 FRAME)

Ref. No. or Q'ty	Part No.	SP	Description
	HARNESS (TEST)		
	CN103		1-561-781-91 s CONNECTOR, BNC, FEMALE "TEST"
	CN5F(TO CN-1034 BOARD)		
	1-764-192-11	o	HOUSING, 2P
	1-695-215-11	o	CONTACT, FEMALE
	HARNESS (VF)		
	CN101		1-565-051-21 o CONNECTOR(WITH C) 20P FEMALE"VF"
	CN7F(TO MB-570 BOARD)		
	1-580-586-11	o	HOUSING, 20P
	1-573-176-11	o	CONTACT, FEMALE AWG22-26
	1-580-599-11	o	CONTACT, FEMALE AWG26-30

Ref. No. or Q'ty	Part No.	SP	Description
C101	1-162-891-11	s	CAP, CERAMIC 1000PF
CN101	1-777-205-11	s	CABLE ASSEMBLY, ENCAPSULATED
CN102	1-562-244-00	o	CONNECTOR, 26P, MALE "VTR"
CN103	1-564-603-11	s	CONNECTOR(W/DC SW)4P, MALE"DC IN"
CN104	1-565-072-11	s	CONNECTOR, 4P FEMALE "DC OUT"
CN105	1-561-781-91	s	CONNECTOR, BNC "GENLOCK/PROMPT"
CN106	1-507-251-99	s	JACK
CN107	1-562-221-41	s	CONNECTOR, 12P FEMALE "VF"
CN108	1-563-833-11	s	CONNECTOR 6P FEMALE "RET CONT"
	1-563-828-11	s	CONTACT, FEMALE AWG#26-#30
CN109	1-509-186-31	s	CONNECTOR, 5P, FEMALE "INCOM1"
CN110	1-509-186-31	s	CONNECTOR, 5P, FEMALE "INCOM2"
CN111	1-777-057-11	o	CABLE ASSEMBLY,COAXIAL (SDI-B) "SERIAL OUT"
FAN1	1-698-775-11	s	FAN, DC
FAN2	1-698-774-11	s	MOTOR, FAN
S101	1-762-548-11	s	SWITCH, TOGGLE "POWER"
S102	⚠ 1-762-699-11	s	SWITCH, PUSH (POWER)
	COAXIAL CABLE (SDI-10 TO RX-28)		
	1-777-058-11	o	CABLE ASSEMBLY,COAXIAL
	FLEXIBLE CARD WIRE (CN2/CN-1039 TO CN7/MB-573)		
	1-777-166-11	o	CABLE, FLEXIBLE FLAT (30 CORE)
	FLEXIBLE CARD WIRE (CN3/CN-1039 TO CN8/MB-573)		
	1-777-167-11	o	CABLE, FLEXIBLE FLAT (30 CORE)
	HARNESS (AC SW)		
	⚠ 1-955-851-12	o	HARNESS, SUB (AC SW)
	CN2F(TO PS-401 BOARD)		
	⚠ 1-562-211-11	o	HOUSING, 3P
	⚠ 1-562-210-11	o	CONTACT, FEMALE AWG18-22
	CN5F(TO CN-1282 BOARD)		
	⚠ 1-562-211-11	o	HOUSING, 3P
	⚠ 1-562-210-11	o	CONTACT, FEMALE AWG18-22
	HARNESS (AC SW-2)		
	⚠ 1-956-101-11	o	HARNESS, SUB (AC SW-2)
	HARNESS (BACK TALLY)		
	CN1F(TO LP-95 BOARD)		
	1-764-193-11	o	HOUSING, 3P
	1-695-215-11	o	CONTACT, FEMALE
	CN30F(TO MB-573 BOARD)		
	1-764-193-11	o	HOUSING, 3P
	1-695-215-11	o	CONTACT, FEMALE
	HARNESS (CA MIC)		
	CN1F(TO CN-1291 BOARD)		
	1-695-212-11	o	HOUSING, 6P
	1-695-215-11	o	CONTACT, FEMALE
	CN25F(TO MB-573 BOARD)		
	1-695-212-11	o	HOUSING, 6P
	1-695-215-11	o	CONTACT, FEMALE
	HARNESS (CHU MIC)		
	CN4F(TO CN-1039 BOARD)		
	1-764-193-11	o	HOUSING, 3P
	1-695-215-11	o	CONTACT, FEMALE
	CN9F(TO MB-573 BOARD)		
	1-764-193-11	o	HOUSING, 3P
	1-695-215-11	o	CONTACT, FEMALE

(HDCA-750 FRAME)

Ref.No. or Q'ty	Part No.	SP	Description
HARNESS (DC IN)			
CN103	1-564-603-11	s	CONNECTOR(W/DC SW)4P, MALE"DC IN"
CN11F(TO MB-573 BOARD)			
	1-580-582-11	o	HOUSING, 12P
	1-580-599-11	o	CONTACT, FEMALE AWG26-30
HARNESS (DC OUT)			
CN104	1-565-072-11	s	CONNECTOR, 4P FEMALE "DC OUT"
CN14F(TO MB-573 BOARD)			
	1-764-194-11	o	HOUSING, 4P
	1-695-215-11	o	CONTACT, FEMALE
HARNESS (INCOM)			
CN1F(TO CN-1282 BOARD)			
	1-580-582-11	o	HOUSING, 12P
	1-580-599-11	o	CONTACT, FEMALE AWG26-30
CN24F(TO MB-573 BOARD)			
	1-695-892-11	o	HOUSING, 12P
	1-695-215-11	o	CONTACT, FEMALE
HARNESS (INCOM JACK)			
CN109	1-509-186-31	s	CONNECTOR, 5P, FEMALE "INCOM1"
CN110	1-509-186-31	s	CONNECTOR, 5P, FEMALE "INCOM2"
CN3F(TO CN-1282 BOARD)			
	1-580-579-11	o	HOUSING, 6P
	1-580-599-11	o	CONTACT, FEMALE AWG26-30
HARNESS (GLK)			
CN105	1-561-781-91	s	CONNECTOR, BNC "GENLOCK/PROMPT"
CN19F(TO MB-573 BOARD)			
	1-764-192-11	o	HOUSING, 2P
	1-695-215-11	o	CONTACT, FEMALE
HARNESS (EXT I/O)			
CN4F(TO CN-1282 BOARD)			
	1-580-583-11	o	HOUSING, 14P
	1-580-599-11	o	CONTACT, FEMALE AWG26-30
CN23F(TO MB-573 BOARD)			
	1-695-214-11	o	HOUSING, 15P
	1-695-215-11	o	CONTACT, FEMALE
HARNESS (PANEL)			
CN2F(TO SW-690 BOARD)			
	1-695-892-11	o	HOUSING, 12P
	1-695-215-11	o	CONTACT, FEMALE
CN27F(TO MB-573 BOARD)			
	1-695-892-11	o	HOUSING, 12P
	1-695-215-11	o	CONTACT, FEMALE
HARNESS (PS)			
CN3F(TO PS-401 BOARD)			
	1-580-582-11	o	HOUSING, 12P
	1-580-599-11	o	CONTACT, FEMALE AWG26-30
CN13F(TO MB-573 BOARD)			
	1-580-582-11	o	HOUSING, 12P
	1-573-176-11	o	CONTACT, FEMALE AWG22-26

(HDCA-750 FRAME)

Ref.No. or Q'ty	Part No.	SP	Description
HARNESS (PWR SW)			
CN106	1-507-251-99	s	JACK
CN107	1-562-221-41	s	CONNECTOR, 12P FEMALE "VF"
CN108	1-563-833-11	s	CONNECTOR 6P FEMALE "RET CONT"
	1-563-828-11	s	CONTACT, FEMALE AWG#26-#30
CN1F(TO SW-690 BOARD)			
	1-695-212-11	o	HOUSING, 6P
	1-695-215-11	o	CONTACT, FEMALE
CN2F(TO CN-1282 BOARD)			
	1-580-579-11	o	HOUSING, 6P
	1-580-599-11	o	CONTACT, FEMALE AWG26-30
CN12F(TO MB-573 BOARD)			
	1-580-582-11	o	HOUSING, 12P
	1-580-599-11	o	CONTACT, FEMALE AWG26-30
CN22F(TO MB-573 BOARD)			
	1-695-892-11	o	HOUSING, 12P
	1-695-215-11	o	CONTACT, FEMALE
CN26F(TO MB-573 BOARD)			
	1-764-192-11	o	HOUSING, 2P
	1-695-215-11	o	CONTACT, FEMALE
S101	1-762-548-11	s	SWITCH, TOGGLE "POWER"
HARNESS (RCP)			
CN28F(TO MB-573 BOARD)			
	1-764-196-11	o	HOUSING, 8P
	1-695-215-11	o	CONTACT, FEMALE
HARNESS (SDI)			
CN2F(TO RX-28 BOARD)			
	1-695-212-11	o	HOUSING, 6P
	1-695-215-11	o	CONTACT, FEMALE
CN2F(TO SDI-10 BOARD)			
	1-695-212-11	o	HOUSING, 6P
	1-695-215-11	o	CONTACT, FEMALE
HARNESS (TRACKER)			
CN7F(TO CN-1282 BOARD)			
	1-580-579-11	o	HOUSING, 6P
	1-580-599-11	o	CONTACT, FEMALE AWG26-30
CN31F(TO MB-573 BOARD)			
	1-695-212-11	o	HOUSING, 6P
	1-695-215-11	o	CONTACT, FEMALE MALE "VTR
HARNESS (VTR)			
CN102	1-562-244-00	o	CONNECTOR, 26P, MALE "VTR"
CN10F(TO MB-573 BOARD)			
	1-580-591-11	o	HOUSING, 30P
	1-573-176-11	o	CONTACT, FEMALE AWG22-26
	1-580-599-11	o	CONTACT, FEMALE AWG26-30
CN20F(TO MB-573 BOARD)			
	1-764-192-11	o	HOUSING, 2P
	1-695-215-11	o	CONTACT, FEMALE
CN21F(TO MB-573 BOARD)			
	1-764-195-11	o	HOUSING, 5P
	1-695-215-11	o	CONTACT, FEMALE
FB101	1-500-082-11	s	CLAMP, SLEEVE FERRITE
FB102	1-500-082-11	s	CLAMP, SLEEVE FERRITE

1-7. Supplied Accessories

Ref. No. or Q'ty	Part No.	SP	Description
(HDC-700)			
2pcs	2-280-511-01	o	BRACKET, ADJUSTMENT, ANGLE
1pcs	3-167-517-01	s	PLATE, NUMBER (BACK TALLY)
1pcs	3-185-945-01	s	PLATE, NUMBER (SIDE PANEL)
2pcs	3-186-502-01	s	BAND, CLAMP
1pcs	4-027-937-01	s	PLATE, NUMBER (UP TALLY)
(HDC-750)			
1pc	A-6772-374-A	s	BELT ASSY, SHOULDER
1pc	A-8273-247-A	o	MOUNTED CIRCUIT BOARD, EX-512
(HDCA-750)			
1pc	A-7612-224-A	o	TABLE ASSY, BATTERY
1pc	A-8273-166-A	o	MOUNTED CIRCUIT BOARD, CN-1292
1pc	3-694-183-01	s	SPACER, BATTERY
1pc	7-621-775-20	s	SCREW +B 2.6X5
3pcs	7-627-556-58	s	SCREW +P 2.6X5
3pcs	7-683-418-04	s	BOLT,HEXAGON SOCKET 4X6
2pcs	7-683-423-04	s	BOLT,HEXAGON SOCKET 4X16

1-8. Optional Fixtures

Part No.	SP	Description
A-8273-247-A	o	EXTENSION BOARD, EX-512
J-6029-140-B	o	PATTERN BOX
J-6394-080-A	o	GRAYSCALE CHART (16:9)
J-6480-010-A	o	ALIGNMENT SLEEVE REMOVER

1-9. Changed Parts

NOTE: The numbers identified by marking with) are matching with each serial numbers.
See the table matched with each serial numbers.

605) Serial No. 10043- (HDC-700), 10086- (HDC-750), 10086- (HDCA-750)
607) Serial No. 10043- (HDC-700), 10096- (HDC-750), 10086- (HDCA-750)
611) Serial No. 10053- (HDC-700), 10096- (HDC-750), 10096- (HDCA-750)
701) Serial No. 10078- (HDC-700), 10096- (HDC-750), 10096- (HDCA-750)
703) Serial No. 10078- (HDC-700), 10111- (HDC-750), 10111- (HDCA-750)
705) Serial No. 10078- (HDC-700), 10116- (HDC-750), 10116- (HDCA-750)
707) Serial No. 10078- (HDC-700), 10131- (HDC-750), 10126- (HDCA-750)
709) Serial No. 11001-, 13001- (HDC-700), 11001- (HDC-750), 11001- (HDCA-750)
710) Serial No. 11006-, 13001- (HDC-700), 11006- (HDC-750), 11001- (HDCA-750)

AU-203 BOARD
---

701) C8	1-104-911-11 s TANTALUM, CHIP 33uF 20% 10V	->	1-113-682-11 s TANTALUM, CHIP 33uF 20% 10V
701) C9	1-104-911-11 s TANTALUM, CHIP 33uF 20% 10V	->	1-113-682-11 s TANTALUM, CHIP 33uF 20% 10V
701) S1	1-762-118-21 s SWITCH, TOGGLE	->	DELETED.

CN-1291/1292 BOARD
---

703) C1	NOT IN USE.	->	1-162-891-11 s CERAMIC 1000P 10% 50V
707) C1	1-162-891-11 s CERAMIC 1000P 10% 50V	->	1-163-275-11 s CERAMIC,CHIP 1000P 5% 50V
703) C2	NOT IN USE.	->	1-162-891-11 s CERAMIC 1000P 10% 50V
707) C2	1-162-891-11 s CERAMIC 1000P 10% 50V	->	1-163-275-11 s CERAMIC,CHIP 1000P 5% 50V
703) C3	NOT IN USE.	->	1-162-891-11 s CERAMIC 1000P 10% 50V
707) C3	1-162-891-11 s CERAMIC 1000P 10% 50V	->	1-163-275-11 s CERAMIC,CHIP 1000P 5% 50V
703) C4	NOT IN USE.	->	1-162-891-11 s CERAMIC 1000P 10% 50V
707) C4	1-162-891-11 s CERAMIC 1000P 10% 50V	->	1-163-275-11 s CERAMIC,CHIP 1000P 5% 50V
703) C5	NOT IN USE.	->	1-162-891-11 s CERAMIC 1000P 10% 50V
707) C5	1-162-891-11 s CERAMIC 1000P 10% 50V	->	1-163-275-11 s CERAMIC,CHIP 1000P 5% 50V
703) C6	NOT IN USE.	->	1-162-891-11 s CERAMIC 1000P 10% 50V
707) C6	1-162-891-11 s CERAMIC 1000P 10% 50V	->	1-163-275-11 s CERAMIC,CHIP 1000P 5% 50V

DAD-19 BOARD
---

710) C11	1-110-569-11 s CHIP,TANTALUM 47uF 20% 6.3V	->	1-113-682-11 o CHIP,TANTALUM 33uF 20% 10V
707) C19	1-162-905-11 s CERAMIC 1PF 0.25PF 50V	->	DELETED.
710) C20	1-162-970-11 s CERAMIC,CHIP 0.01uF 10% 25V	->	1-164-156-11 s CERAMIC 0.1uF 25V
710) C30	1-110-569-11 s CHIP,TANTALUM 47uF 20% 6.3V	->	1-113-682-11 o CHIP,TANTALUM 33uF 20% 10V
710) C41	1-162-970-11 s CERAMIC,CHIP 0.01uF 10% 25V	->	1-164-156-11 s CERAMIC 0.1uF 25V
710) C56	1-135-259-11 s CHIP,TANTALUM 10uF 20% 6.3V	->	1-104-851-11 o CHIP,TANTALUM 10uF 20% 10V
710) C67	1-162-970-11 s CERAMIC,CHIP 0.01uF 10% 25V	->	1-164-156-11 s CERAMIC 0.1uF 25V
710) C107	1-110-569-11 s CHIP,TANTALUM 47uF 20% 6.3V	->	1-113-682-11 o CHIP,TANTALUM 33uF 20% 10V
710) C110	1-110-569-11 s CHIP,TANTALUM 47uF 20% 6.3V	->	1-113-682-11 o CHIP,TANTALUM 33uF 20% 10V
710) C113	1-113-682-11 o CHIP,TANTALUM 33uF 20% 10V	->	1-164-156-11 s CERAMIC 0.1uF 25V
710) C115	1-162-970-11 s CERAMIC,CHIP 0.01uF 10% 25V	->	1-164-156-11 s CERAMIC 0.1uF 25V
710) C117	1-110-569-11 s CHIP,TANTALUM 47uF 20% 6.3V	->	1-113-682-11 o CHIP,TANTALUM 33uF 20% 10V
710) C121	1-110-569-11 s CHIP,TANTALUM 47uF 20% 6.3V	->	1-113-682-11 o CHIP,TANTALUM 33uF 20% 10V
710) C125	1-110-569-11 s CHIP,TANTALUM 47uF 20% 6.3V	->	1-113-682-11 o CHIP,TANTALUM 33uF 20% 10V
710) C146	1-162-970-11 s CERAMIC,CHIP 0.01uF 10% 25V	->	DELETED.
710) C160	1-110-569-11 s CHIP,TANTALUM 47uF 20% 6.3V	->	1-113-682-11 o CHIP,TANTALUM 33uF 20% 10V
710) C164	1-135-259-11 s CHIP,TANTALUM 10uF 20% 6.3V	->	1-104-851-11 o CHIP,TANTALUM 10uF 20% 10V
710) C174	1-162-970-11 s CERAMIC,CHIP 0.01uF 10% 25V	->	DELETED.
710) C176	1-110-569-11 s CHIP,TANTALUM 47uF 20% 6.3V	->	1-113-682-11 o CHIP,TANTALUM 33uF 20% 10V
710) C189	1-162-905-11 s CERAMIC 1PF 0.25PF 50V	->	1-162-970-11 s CERAMIC,CHIP 0.01uF 10% 25V

http://getMANUAL.com

(DAD-19 BOARD)

710)	C193	1-162-970-11 s CERAMIC,CHIP 0.01uF 10% 25V	->	DELETED.
710)	C204	1-135-157-21 s TANTALUM 10uF 10% 6.3V	->	1-113-682-11 o CHIP,TANTALUM 33uF 20% 10V
710)	C214	1-135-259-11 s CHIP,TANTALUM 10uF 20% 6.3V	->	1-104-851-11 o CHIP,TANTALUM 10uF 20% 10V
710)	C217	NOT IN USE.	->	1-162-970-11 s CERAMIC,CHIP 0.01uF 10% 25V
710)	C218	NOT IN USE.	->	1-162-970-11 s CERAMIC,CHIP 0.01uF 10% 25V
710)	FL5	1-233-602-21 s FILTER (SMD), LOW PASS	->	1-234-076-21 s FILTER (SMD), LOW PASS
710)	IC1	8-759-386-29 s IC 74LCX574SJX	->	8-759-386-26 s IC 74LCX574MTCX
710)	IC6	8-752-356-44 s IC CXD2306Q	->	8-752-375-98 s IC CXD2315Q
710)	IC8	8-759-386-29 s IC 74LCX574SJX	->	8-759-386-26 s IC 74LCX574MTCX
710)	IC11	8-759-470-22 o 7032V-DAD19-PS-V1.00	->	8-759-531-66 o 7032V-DAD19-YPS-V1.00
710)	IC12	8-759-386-29 s IC 74LCX574SJX	->	8-759-421-88 s IC SN74LVC821APW-E05
710)	IC16	8-759-386-29 s IC 74LCX574SJX	->	8-759-421-88 s IC SN74LVC821APW-E05
710)	IC19	8-752-356-44 s IC CXD2306Q	->	8-752-375-98 s IC CXD2315Q
710)	IC20	8-759-470-24 o 7032V-DAD19-SP-V1.00	->	8-759-531-68 o 7032V-DAD19-SP-V2.00
710)	IC22	8-759-470-22 o 7032V-DAD19-PS-V1.00	->	8-759-531-70 o 7032V-DAD19-CPS-V1.00
710)	IC26	8-759-386-29 s IC 74LCX574SJX	->	8-759-421-88 s IC SN74LVC821APW-E05
710)	IC33	8-752-356-44 s IC CXD2306Q	->	8-752-375-98 s IC CXD2315Q
710)	IC34	8-759-386-29 s IC 74LCX574SJX	->	8-759-421-88 s IC SN74LVC821APW-E05
710)	IC35	8-759-470-21 o 7032V-DAD19-FW-V1.00	->	8-759-531-65 o 7032V-DAD19-FW-V2.00
710)	IC37	8-759-386-33 s IC 74LCX240SJX	->	DELETED.
710)	IC40	8-759-386-29 s IC 74LCX574SJX	->	8-759-421-88 s IC SN74LVC821APW-E05
710)	IC42	8-759-386-29 s IC 74LCX574SJX	->	8-759-421-88 s IC SN74LVC821APW-E05
710)	IC43	8-759-386-31 s IC 74LCX244SJX	->	8-759-389-33 s IC 74LCX244MTCX
710)	IC45	8-759-386-31 s IC 74LCX244SJX	->	8-759-389-33 s IC 74LCX244MTCX
710)	IC46	8-759-470-25 o 7032V-DAD19-TG-V1.00	->	8-759-531-69 o 7032V-DAD19-TG-V2.00
710)	IC44	8-759-386-29 s IC 74LCX574SJX	->	8-759-389-26 s IC 74LCX08MTCX
710)	IC49	8-759-386-29 s IC 74LCX574SJX	->	8-759-389-26 s IC 74LCX08MTCX
710)	IC51	8-759-470-23 o 7032V-DAD19-QTV-V1.00	->	8-759-531-67 o 7032V-DAD19-QTV-V2.00
710)	IC50	8-759-386-29 s IC 74LCX574SJX	->	8-759-389-26 s IC 74LCX08MTCX
710)	IC52	8-759-196-73 s IC UPD485505G-25	->	8-759-445-73 s IC M66256FP-E2
710)	IC53	8-759-386-29 s IC 74LCX574SJX	->	8-759-472-65 s IC 74VHC574MTCX
710)	IC54	8-759-386-31 s IC 74LCX244SJX	->	8-759-389-33 s IC 74LCX244MTCX
710)	IC58	8-759-386-31 s IC 74LCX244SJX	->	8-759-389-33 s IC 74LCX244MTCX
710)	IC61	8-759-386-29 s IC 74LCX574SJX	->	8-759-386-26 s IC 74LCX574MTCX
710)	L16	NOT IN USE.	->	1-412-390-21 s INDUCTOR CHIP 0uH
710)	Q14	8-729-928-90 s TRANSISTOR DTC114EE	->	DELETED.
710)	Q16	8-729-022-29 s TRANSISTOR 2SJ332S	->	DELETED.
611)	R1	1-218-866-11 s CHIP, METAL 6.2K 0.50% 1/16W	->	1-218-703-11 s CHIP, METAL 3K 0.50% 1/16W
710)	R1	1-218-703-11 s CHIP,METAL 3K 0.50% 1/16W	->	DELETED.
611)	R2	1-218-692-11 s CHIP, METAL 1K 0.50% 1/16W	->	1-218-695-11 s METAL 1.3K 0.50% 1/16W
710)	R3	1-218-692-11 s CHIP,METAL 1K 0.50% 1/16W	->	1-218-660-91 s CHIP,METAL 47 0.50% 1/16W
710)	R4	1-218-692-11 s CHIP,METAL 1K 0.50% 1/16W	->	DELETED.
710)	R5	1-218-692-11 s CHIP,METAL 1K 0.50% 1/16W	->	1-216-864-11 s CHIP,METAL 0 5% 1/16W
710)	R7	1-218-675-11 s CHIP,METAL 200 5% 1/16W	->	DELETED.
710)	R13	1-218-675-11 s CHIP,METAL 200 5% 1/16W	->	1-218-664-11 s CHIP,METAL 68 0.50% 1/16W
710)	R28	1-218-745-11 s CHIP,METAL 160K 0.50% 1/16W	->	1-218-740-11 s CHIP,METAL 100K 0.50% 1/16W
710)	R35	1-218-680-11 s CHIP,METAL 330 5% 1/16W	->	DELETED.
710)	R38	NOT IN USE.	->	1-218-716-11 s CHIP,METAL 10K 0.50% 1/16W
705)	R42	1-218-727-11 s CHIP,METAL 30K 0.50% 1/16W	->	1-218-728-11 s CHIP,METAL 33K 0.50% 1/16W
710)	R57	NOT IN USE.	->	1-218-685-11 s CHIP,METAL 510 5% 1/16W
710)	R58	NOT IN USE.	->	1-218-660-91 s CHIP,METAL 47 0.50% 1/16W
710)	R66	NOT IN USE.	->	1-218-660-91 s CHIP,METAL 47 0.50% 1/16W
710)	R70	1-218-692-11 s CHIP,METAL 1K 0.50% 1/16W	->	DELETED.
710)	R71	1-218-692-11 s CHIP,METAL 1K 0.50% 1/16W	->	1-216-864-11 s CHIP,METAL 0 5% 1/16W
710)	R72	1-218-692-11 s CHIP,METAL 1K 0.50% 1/16W	->	1-216-864-11 s CHIP,METAL 0 5% 1/16W
710)	R85	1-218-745-11 s CHIP,METAL 160K 0.50% 1/16W	->	1-218-740-11 s CHIP,METAL 100K 0.50% 1/16W
710)	R86	1-218-716-11 s CHIP,METAL 10K 0.50% 1/16W	->	1-218-652-11 s CHIP,METAL 22 0.50% 1/16W
710)	R87	1-218-716-11 s CHIP,METAL 10K 0.50% 1/16W	->	DELETED.
710)	R88	1-218-716-11 s CHIP,METAL 10K 0.50% 1/16W	->	1-216-864-11 s CHIP,METAL 0 5% 1/16W

(DAD-19 BOARD)

710) R89	1-218-716-11 s CHIP,METAL 10K 0.50% 1/16W	–>	1-216-864-11 s CHIP,METAL 0 5% 1/16W
710) R90	1-218-716-11 s CHIP,METAL 10K 0.50% 1/16W	–>	1-218-700-11 s CHIP,METAL 2.2K 0.50% 1/16W
710) R91	1-218-716-11 s CHIP,METAL 10K 0.50% 1/16W	–>	1-218-700-11 s CHIP,METAL 2.2K 0.50% 1/16W
710) R92	1-218-716-11 s CHIP,METAL 10K 0.50% 1/16W	–>	1-218-700-11 s CHIP,METAL 2.2K 0.50% 1/16W
710) R93	1-218-716-11 s CHIP,METAL 10K 0.50% 1/16W	–>	1-218-660-91 s CHIP,METAL 47 0.50% 1/16W
710) R94	1-218-716-11 s CHIP,METAL 10K 0.50% 1/16W	–>	DELETED.
710) R95	1-218-716-11 s CHIP,METAL 10K 0.50% 1/16W	–>	DELETED.
710) R96	1-218-716-11 s CHIP,METAL 10K 0.50% 1/16W	–>	DELETED.
710) R97	1-218-716-11 s CHIP,METAL 10K 0.50% 1/16W	–>	DELETED.
710) R98	1-218-716-11 s CHIP,METAL 10K 0.50% 1/16W	–>	DELETED.
710) R99	1-218-716-11 s CHIP,METAL 10K 0.50% 1/16W	–>	DELETED.
710) R100	1-218-716-11 s CHIP,METAL 10K 0.50% 1/16W	–>	DELETED.
710) R101	1-218-716-11 s CHIP,METAL 10K 0.50% 1/16W	–>	DELETED.
710) R102	1-218-716-11 s CHIP,METAL 10K 0.50% 1/16W	–>	DELETED.
710) R103	1-218-716-11 s CHIP,METAL 10K 0.50% 1/16W	–>	DELETED.
710) R104	1-218-716-11 s CHIP,METAL 10K 0.50% 1/16W	–>	DELETED.
710) R105	1-218-716-11 s CHIP,METAL 10K 0.50% 1/16W	–>	DELETED.
710) R107	1-218-680-11 s CHIP,METAL 330 5% 1/16W	–>	DELETED.
710) R108	1-218-716-11 s CHIP,METAL 10K 0.50% 1/16W	–>	DELETED.
710) R114	1-218-675-11 s CHIP,METAL 200 5% 1/16W	–>	DELETED.
710) R117	1-216-864-11 s CHIP,METAL 0 5% 1/16W	–>	DELETED.
710) R122	1-218-680-11 s CHIP,METAL 330 5% 1/16W	–>	1-218-700-11 s CHIP,METAL 2.2K 0.50% 1/16W
710) R131	1-218-692-11 s CHIP,METAL 1K 0.50% 1/16W	–>	DELETED.
710) R132	1-218-692-11 s CHIP,METAL 1K 0.50% 1/16W	–>	DELETED.
710) R133	1-218-692-11 s CHIP,METAL 1K 0.50% 1/16W	–>	DELETED.
710) R135	1-218-692-11 s CHIP,METAL 1K 0.50% 1/16W	–>	1-216-864-11 s CHIP,METAL 0 5% 1/16W
710) R145	1-218-745-11 s CHIP,METAL 160K 0.50% 1/16W	–>	1-218-740-11 s CHIP,METAL 100K 0.50% 1/16W
607) R147	1-218-723-11 s METAL 20K 0.50% 1/16W	–>	1-218-725-11 s METAL 24K 0.50% 1/16W
607) R149	1-218-727-11 s METAL 30K 0.50% 1/16W	–>	1-218-881-11 s CHIP, METAL 27K 0.50% 1/16W
607) R151	1-218-692-11 s CHIP, METAL 1K 0.50% 1/16W	–>	1-218-694-11 s CHIP, METAL 1.2K 0.50% 1/16W
710) R158	1-218-740-11 s CHIP,METAL 100K 0.50% 1/16W	–>	DELETED.
710) R162	1-218-680-11 s CHIP,METAL 330 5% 1/16W	–>	1-218-700-11 s CHIP,METAL 2.2K 0.50% 1/16W
710) R164	1-218-692-11 s CHIP,METAL 1K 0.50% 1/16W	–>	1-218-700-11 s CHIP,METAL 2.2K 0.50% 1/16W
607) R172	1-218-858-11 s CHIP, METAL 3K 0.50% 1/16W	–>	DELETED.
710) R173	1-218-692-11 s CHIP,METAL 1K 0.50% 1/16W	–>	1-218-685-11 s CHIP,METAL 510 5% 1/16W
710) R181	1-218-692-11 s CHIP,METAL 1K 0.50% 1/16W	–>	1-218-700-11 s CHIP,METAL 2.2K 0.50% 1/16W
710) R183	1-218-692-11 s CHIP,METAL 1K 0.50% 1/16W	–>	1-218-700-11 s CHIP,METAL 2.2K 0.50% 1/16W
607) R217	1-218-716-11 s METAL 10K 0.50% 1/16W	–>	1-218-717-11 s CHIP, METAL 11K 0.50% 1/16W
710) R218	1-218-716-11 s CHIP,METAL 10K 0.50% 1/16W	–>	DELETED.
710) R219	1-216-864-11 s CHIP,METAL 0 5% 1/16W	–>	DELETED.
710) R220	1-216-864-11 s CHIP,METAL 0 5% 1/16W	–>	DELETED.
710) R221	1-218-716-11 s CHIP,METAL 10K 0.50% 1/16W	–>	DELETED.
710) R224	1-218-740-11 s CHIP,METAL 100K 0.50% 1/16W	–>	DELETED.
611) R230	NOT IN USE.	–>	1-218-716-11 s METAL 10K 0.50% 1/16W
611) R231	NOT IN USE.	–>	1-216-864-11 s METAL, CHIP 0 5% 1/16W
710) R249	1-216-854-11 s CHIP,METAL 560 5% 1/16W	–>	DELETED.
710) R250	1-216-854-11 s CHIP,METAL 560 5% 1/16W	–>	DELETED.
710) R251	1-216-854-11 s CHIP,METAL 560 5% 1/16W	–>	DELETED.
710) R252	1-216-854-11 s CHIP,METAL 560 5% 1/16W	–>	DELETED.
710) R253	1-216-854-11 s CHIP,METAL 560 5% 1/16W	–>	DELETED.
710) R254	1-216-854-11 s CHIP,METAL 560 5% 1/16W	–>	DELETED.
611) R255	NOT IN USE.	–>	1-216-864-11 s METAL, CHIP 0 5% 1/16W
710) R255	1-216-864-11 s CHIP,METAL 0 5% 1/16W	–>	DELETED.
611) R256	NOT IN USE.	–>	1-218-716-11 s METAL 10K 0.50% 1/16W

DAP-5 BOARD
---

611) R117	1-218-708-11 s METAL 4.7K 0.50% 1/16W	–>	1-218-710-11 s CHIP, METAL 5.6K 0.50% 1/16W
611) R120	1-218-708-11 s METAL 4.7K 0.50% 1/16W	–>	1-218-710-11 s CHIP, METAL 5.6K 0.50% 1/16W

```
----------
DL-65 BOARD
----------

703) IC700    NOT IN USE.                                  ->  8-759-058-62 s IC TC7S08FU(TE85R)
605) IC800    NOT IN USE.                                  ->  8-759-234-20 s IC TC7S08F
703) IC800    8-759-234-20 s IC TC7S08F                    ->  DELETED.
605) R164     1-218-883-11 s METAL 33K 0.50% 1/16W         ->  1-218-734-11 s CHIP, METAL 56K 5% 1/16W
703) R164     1-218-734-11 s CHIP, METAL 56K 5% 1/16W      ->  1-218-733-11 s CHIP, METAL 51K 5% 1/16W

611) R165     1-218-712-11 s CHIP, METAL 6.8K 0.50% 1/16W  ->  1-218-711-11 s CHIP, METAL 6.2K 0.50% 1/16W
703) R165     1-218-711-11 s CHIP, METAL 6.2K 0.50% 1/16W  ->  1-218-704-11 s CHIP, METAL 3.3K 0.50% 1/16W
703) R174     NOT IN USE.                                  ->  1-218-732-11 s CHIP, METAL 47K 5% 1/16W
605) R364     1-218-883-11 s METAL 33K 0.50% 1/16W         ->  1-218-734-11 s CHIP, METAL 56K 5% 1/16W
703) R364     1-218-734-11 s CHIP, METAL 56K 5% 1/16W      ->  1-218-733-11 s CHIP, METAL 51K 5% 1/16W

611) R365     1-218-712-11 s CHIP, METAL 6.8K 0.50% 1/16W  ->  1-218-711-11 s CHIP, METAL 6.2K 0.50% 1/16W
703) R365     1-218-711-11 s CHIP, METAL 6.2K 0.50% 1/16W  ->  1-218-704-11 s CHIP, METAL 3.3K 0.50% 1/16W
605) R396     1-218-883-11 s METAL 33K 0.50% 1/16W         ->  1-218-734-11 s CHIP, METAL 56K 5% 1/16W
703) R396     1-218-734-11 s CHIP, METAL 56K 5% 1/16W      ->  1-218-733-11 s CHIP, METAL 51K 5% 1/16W
605) R397     1-218-704-11 s METAL 3.3K 0.50% 1/16W        ->  1-218-712-11 s CHIP, METAL 6.8K 0.50% 1/16W

611) R397     1-218-712-11 s CHIP, METAL 6.8K 0.50% 1/16W  ->  1-218-711-11 s CHIP, METAL 6.2K 0.50% 1/16W
703) R397     1-218-711-11 s CHIP, METAL 6.2K 0.50% 1/16W  ->  1-218-704-11 s CHIP, METAL 3.3K 0.50% 1/16W
703) R406     NOT IN USE.                                  ->  1-218-732-11 s CHIP, METAL 47K 5% 1/16W
703) R407     NOT IN USE.                                  ->  1-218-732-11 s CHIP, METAL 47K 5% 1/16W
605) R564     1-218-883-11 s METAL 33K 0.50% 1/16W         ->  1-218-734-11 s CHIP, METAL 56K 5% 1/16W

703) R564     1-218-734-11 s CHIP, METAL 56K 5% 1/16W      ->  1-218-733-11 s CHIP, METAL 51K 5% 1/16W
611) R565     1-218-712-11 s CHIP, METAL 6.8K 0.50% 1/16W  ->  1-218-711-11 s CHIP, METAL 6.2K 0.50% 1/16W
703) R565     1-218-711-11 s CHIP, METAL 6.2K 0.50% 1/16W  ->  1-218-704-11 s CHIP, METAL 3.3K 0.50% 1/16W
703) R574     NOT IN USE.                                  ->  1-218-732-11 s CHIP, METAL 47K 5% 1/16W
703) R700     NOT IN USE.                                  ->  1-218-652-11 s CHIP, METAL 22 0.50% 1/16W

605) R792     1-211-977-11 s CHIP, METAL 22 0.50% 1/16W    ->  DELETED.
703) R792     NOT IN USE.                                  ->  1-218-652-11 s CHIP, METAL 22 0.50% 1/16W


-------------
HDC-750 FRAME
-------------

703) C101     NOT IN USE.                                  ->  1-162-891-11 s CAP, CERAMIC 1000PF
703) C102     NOT IN USE.                                  ->  1-162-891-11 s CAP, CERAMIC 1000PF
703) C103     NOT IN USE.                                  ->  1-162-891-11 s CAP, CERAMIC 1000PF
703) CN104    1-563-029-21 s CONNECTOR, XLR 3P, FEMALE     ->  1-509-184-51 s CONNECTOR, 3P FEMALE


-------------
HDCA-750 FRAME
-------------

703) C101     NOT IN USE.                                  ->  1-162-891-11 s CAP, CERAMIC 1000PF
703) FB101    NOT IN USE.                                  ->  1-500-082-11 s CLEMP, SLEEVE FERRITE
703) FB102    NOT IN USE.                                  ->  1-500-082-11 s CLAMP, SLEEVE FERRITE


------------
IF-569 BOARD
------------

709) R121     1-218-692-11 s CHIP,METAL 1K 0.50% 1/16W     ->     1-218-694-11 s CHIP,METAL 1.2K 0.50% 1/16W


------------
MB-570 BOARD
------------

705) IC2      8-759-398-81 s IC TLC27M2CPW-E05              ->  8-759-075-97 s  IC LM358PW
```

```
------------
MB-573 BOARD
------------

705) IC2     8-759-398-81 s IC TLC27M2CPW-E05                 ->  8-759-075-97 s IC LM358PW
703) Q12     8-729-928-36 s TRANSISTOR DTA114EE               ->  DELETED.
703) Q13     8-729-928-36 s TRANSISTOR DTA114EE               ->  DELETED.
703) R51     1-218-728-11 s CHIP,METAL 33K 0.50% 1/16W        ->  1-216-864-11 s CHIP,METAL 0 0.50% 1/16W


------------
MB-666 BOARD
------------

705) IC2     8-759-398-81 s IC TLC27M2CPW-E05                 ->  8-759-075-97 s IC LM358PW
705) IC5     8-759-398-81 s IC TLC27M2CPW-E05                 ->  8-759-075-97 s IC LM358PW


------------
PS-400 BOARD
------------

611) C1      NOT IN USE.                                      ->  1-164-004-11 s CERAMIC, CHIP 0.1uF 10% 25V
611) C3      NOT IN USE.                                      ->  1-107-689-21 s TANTAL 1uF 20% 35V
705) C46     1-163-038-00 s CHIP, CERAMIC 0.1uF 25V           ->  DELETED.
705) C51     1-104-760-11 s CERAMIC, CHIP 0.047uF 10% 50V     ->  DELETED.
705) C110    NOT IN USE.                                      ->  1-135-091-00 s TANTALUM, CHIP 1uF 20% 16V

705) C111    NOT IN USE.                                      ->  1-104-851-11 s TANTALUM, CHIP 10uF 20% 10V
705) C112    NOT IN USE.                                      ->  1-135-091-00 s TANTALUM, CHIP 1uF 20% 16V
705) C113    NOT IN USE.                                      ->  1-163-038-00 s CHIP, CERAMIC 0.1uF 25V
705) C114    NOT IN USE.                                      ->  1-163-038-00 s CHIP, CERAMIC 0.1uF 25V
705) C115    NOT IN USE.                                      ->  1-104-760-11 s CERAMIC, CHIP 0.047uF 10% 50V

705) C116    NOT IN USE.                                      ->  1-104-851-11 s TANTALUM, CHIP 10uF 20% 10V
705) C117    NOT IN USE.                                      ->  1-163-038-00 s CHIP, CERAMIC 0.1uF 25V
607) CB1     1-533-641-11 s BREAKER, CIRCUIT                  ->  1-533-520-21 s BREAKER, CIRCUIT 6A 250V
607) FB6     NOT IN USE.                                      ->  1-543-528-11 s BEAD, AMORPHOUS
705) IC7     8-759-398-81 s IC TLC27M2CPW-E05                 ->  8-759-075-97 s IC LM358PW

705) IC10    NOT IN USE.                                      ->  8-759-260-57 s IC TL1451ACPW-E05
607) L14     1-414-700-11 s INDUCTOR 47uH                     ->  DELETED.
705) Q70     NOT IN USE.                                      ->  8-729-117-32 s TRANSISTOR 2SC4177
705) Q71     NOT IN USE.                                      ->  8-729-928-90 s TRANSISTOR DTC114EE
705) Q72     NOT IN USE.                                      ->  8-729-117-32 s TRANSISTOR 2SC4177

611) R46     1-216-685-11 s METAL, CHIP 27K 0.5% 1/10W        ->  1-216-677-11 s METAL, CHIP 12K 0.5% 1/10W
705) R79     1-216-651-11 s METAL, CHIP 1K 0.5% 1/10W         ->  DELETED.
705) R103    1-216-638-11 s METAL 300 0.50% 1/10W             ->  DELETED.
705) R104    1-216-692-11 s CHIP METAL 51K 0.50% 1/10W        ->  DELETED.
705) R105    1-216-665-11 s METAL, CHIP 3.9K 0.5% 1/10W       ->  DELETED.

705) R106    1-216-660-11 s METAL 2.4K 0.50% 1/10W            ->  DELETED.
705) R135    NOT IN USE.                                      ->  1-216-651-11 s METAL, CHIP 1K 0.5% 1/10W
705) R171    NOT IN USE.                                      ->  1-216-651-11 s METAL, CHIP 1K 0.5% 1/10W
705) R172    NOT IN USE.                                      ->  1-216-651-11 s METAL, CHIP 1K 0.5% 1/10W
705) R173    NOT IN USE.                                      ->  1-216-695-11 s CHIP, METAL 68K 0.50% 1/10W

705) R174    NOT IN USE.                                      ->  1-216-683-11 s CHIP, METAL 22K 0.50% 1/10W
705) R175    NOT IN USE.                                      ->  1-216-687-11 s METAL, CHIP 33K 0.5% 1/10W
705) R176    NOT IN USE.                                      ->  1-218-755-11 s METAL, CHIP 130K 0.50% 1/10W
705) R177    NOT IN USE.                                      ->  1-216-692-11 s CHIP, METAL 51K 0.50% 1/10W
705) R178    NOT IN USE.                                      ->  1-216-665-11 s METAL, CHIP 3.9K 0.5% 1/10W

705) R179    NOT IN USE.                                      ->  1-216-638-11 s METAL 300 0.50% 1/10W
705) R180    NOT IN USE.                                      ->  1-216-660-11 s METAL 2.4K 0.50% 1/10W
705) R181    NOT IN USE.                                      ->  1-216-675-11 s METAL, CHIP 10K 0.5% 1/10W
705) R182    NOT IN USE.                                      ->  1-216-687-11 s METAL, CHIP 33K 0.5% 1/10W
705) R183    NOT IN USE.                                      ->  1-216-683-11 s CHIP, METAL 22K 0.50% 1/10W


------------
PS-401 BOARD
------------

701) CP2     8-719-053-15 s PHOTO COUPLER PS2701-1-E3-L       ->  8-749-010-64 s PHOTO COUPLER TLP123F2
```

```
------------
SG-226 BOARD
------------

709) C202     1-163-108-00 s CERAMIC CHIP 43PF 5PF 50V        -> 1-162-922-11 s CERAMIC CHIP 39PF 5% 50V
611) R404     NOT IN USE.                                     -> 1-216-864-11 s METAL, CHIP 0 5% 1/16W
709) R406     1-247-879-11 s CARBON 100K 5% 1/4W              -> 1-218-740-11 s CHIP,METAL 100K 0.50% 1/16W
709) R408     NOT IN USE.                                     -> 1-216-864-11 s CHIP,METAL 0 5% 1/16W


------------
SW-688 BOARD
------------

709) CN5    1-695-479-11 s PIN CONNECTOR (PC BOARD) 2P        -> 1-695-480-11 s PIN CONNECTOR (PC BOARD) 2P


------------
VA-158 BOARD
------------

705) C13      1-135-166-21 s TANTALUM, CHIP 47uF 10% 10V      -> 1-113-642-11 s TANTALUM, CHIP 47uF 10% 10V
705) C14      1-135-166-21 s TANTALUM, CHIP 47uF 10% 10V      -> 1-113-642-11 s TANTALUM, CHIP 47uF 10% 10V
605) C302     1-162-908-11 s CERAMIC 3PF 0.25PF 50V           -> 1-162-905-11 s CERAMIC 1PF 0.25PF 50V
705) C305     1-104-911-11 s TANTALUM, CHIP 33uF 20% 10V      -> 1-113-682-11 s TANTALUM, CHIP 33uF 20% 10V
705) C306     1-104-911-11 s TANTALUM, CHIP 33uF 20% 10V      -> 1-113-682-11 s TANTALUM, CHIP 33uF 20% 10V

605) C502     1-162-908-11 s CERAMIC 3PF 0.25PF 50V           -> 1-162-905-11 s CERAMIC 1PF 0.25PF 50V
705) C505     1-104-911-11 s TANTALUM, CHIP 33uF 20% 10V      -> 1-113-682-11 s TANTALUM, CHIP 33uF 20% 10V
705) C506     1-104-911-11 s TANTALUM, CHIP 33uF 20% 10V      -> 1-113-682-11 s TANTALUM, CHIP 33uF 20% 10V
605) C702     1-162-908-11 s CERAMIC 3PF 0.25PF 50V           -> 1-162-905-11 s CERAMIC 1PF 0.25PF 50V
705) C705     1-104-911-11 s TANTALUM, CHIP 33uF 20% 10V      -> 1-113-682-11 s TANTALUM, CHIP 33uF 20% 10V

705) C706     1-104-911-11 s TANTALUM, CHIP 33uF 20% 10V      -> 1-113-682-11 s TANTALUM, CHIP 33uF 20% 10V
705) FL300    1-233-603-21 s FILTER (SMD), LOW PASS           -> 1-233-943-11 s FILTER, LOW PASS
705) FL301    NOT IN USE.                                     -> 1-416-347-11 s DELAY LINE
705) FL500    1-233-603-21 s FILTER (SMD), LOW PASS           -> 1-233-943-11 s FILTER, LOW PASS
705) FL501    NOT IN USE.                                     -> 1-416-347-11 s DELAY LINE

705) FL700    1-233-603-21 s FILTER (SMD), LOW PASS           -> 1-233-943-11 s FILTER, LOW PASS
705) FL701    NOT IN USE.                                     -> 1-416-347-11 s DELAY LINE
705) IC309    8-759-030-49 s IC MC1495M                       -> 8-759-485-84 s IC MC1495DR2
705) IC509    8-759-030-49 s IC MC1495M                       -> 8-759-485-84 s IC MC1495DR2
705) IC709    8-759-030-49 s IC MC1495M                       -> 8-759-485-84 s IC MC1495DR2

607) R108     1-218-733-11 s CHIP, METAL 51K 0.50% 1/16W      -> 1-218-740-11 s CHIP, METAL 100K 0.50% 1/16W
607) R109     1-218-733-11 s CHIP, METAL 51K 0.50% 1/16W      -> 1-218-740-11 s CHIP, METAL 100K 0.50% 1/16W
607) R110     1-218-733-11 s CHIP, METAL 51K 0.50% 1/16W      -> 1-218-740-11 s CHIP, METAL 100K 0.50% 1/16W
607) R300     1-218-729-11 s CHIP, METAL 36K 0.50% 1/16W      -> 1-218-744-11 s CHIP, METAL 150K 0.50% 1/16W
705) R317     1-218-697-11 s CHIP, METAL 1.6K 0.50% 1/16W     -> 1-216-864-11 s METAL, CHIP 0 5% 1/16W

607) R500     1-218-729-11 s CHIP, METAL 36K 0.50% 1/16W      -> 1-218-744-11 s CHIP, METAL 150K 0.50% 1/16W
705) R517     1-218-697-11 s CHIP, METAL 1.6K 0.50% 1/16W     -> 1-216-864-11 s METAL, CHIP 0 5% 1/16W
607) R700     1-218-729-11 s CHIP, METAL 36K 0.50% 1/16W      -> 1-218-744-11 s CHIP, METAL 150K 0.50% 1/16W
705) R717     1-218-697-11 s CHIP, METAL 1.6K 0.50% 1/16W     -> 1-216-864-11 s METAL, CHIP 0 5% 1/16W

------------
VDA-31 BOARD
------------

701) C16      1-162-915-11 s CERAMIC, CHIP 10PF 5PF 50V       -> 1-162-957-11 s CERAMIC, CHIP 220PF 5PF 50V
611) C541     NOT IN USE.                                     -> 1-162-905-11 s CERAMIC 1PF 0.25PF 50V
611) C603     NOT IN USE.                                     -> 1-162-909-11 s CERAMIC 4PF 0.25PF 50V
701) D1       NOT IN USE.                                     -> 8-719-059-52 s DIODE MA3J14300LSO
701) R41      NOT IN USE.                                     -> 1-218-700-11 s METAL 2.2K 0.50% 1/16W

701) R42      NOT IN USE.                                     -> 1-218-692-11 s CHIP, METAL 1K 0.50% 1/16W
607) R122     1-218-668-11 s CHIP, METAL 100 0.50% 1/16W      -> 1-218-701-11 s METAL 2.4K 0.50% 1/16W
607) R229     1-218-668-11 s CHIP, METAL 100 0.50% 1/16W      -> 1-218-701-11 s METAL 2.4K 0.50% 1/16W
607) R322     1-218-668-11 s CHIP, METAL 100 0.50% 1/16W      -> 1-218-701-11 s METAL 2.4K 0.50% 1/16W
607) R509     1-218-694-11 s CHIP, METAL 1.2K 0.50% 1/16W     -> 1-218-693-11 s CHIP, METAL 1.1K 0.50% 1/16W

701) R594     1-218-724-11 s CHIP, METAL 22K 5% 1/16W         -> DELETED.
```

Section 2
Semiconductor Pin Assignments

ここに記載されている半導体は，それぞれの機能を等価的に表したものです。　なお，互換性のない型名を併記していることがありますので，部品を交換するときは，Spare Partsの章を参照してください。
等価回路はＩＣメーカーのデータブックに従いました。

Semiconductors of which functions are equivalent are described here. For parts replacement, refer to the section of Spare Parts in this manual. The circuit diagram of each IC is obtained from the IC data book published by the manufacturer.

DIODE	PAGE
1S1588	2-3
1S2348HTD	2-3
1S2835-T1	2-3
1S2836	2-3
1SS123-T1	2-3
1SS181	2-3
1SS184	2-3
1SS226	2-3
1SS300-TE85L	2-3
1SS301-TE85L	2-3
1SS302	2-3
1SS302-TE85L	2-3
CL-200HR-C-TSL	2-3
DBB10G	2-3
EA30QS04-F	2-3
EA60QC06-F	2-3
EA60QC06-TE16F2	2-3
EC10QS06-TE12L5	2-3
GL3UR8	2-3
GL5ED5	2-3
LB-156	2-3
MA141WA-TX	2-3
MA141WK	2-3
MA3J14300LSO	2-3
MA3J74200LSO	2-3
MA728	2-3
MA728-TX	2-3
MA8047	2-3
MA8047-TX	2-3
MA8120-L	2-3
MA8120-L-TX	2-3

DIODE	PAGE
RD10M-B1	2-3
RD10M-T1B1	2-3
RD10UJN-T1	2-3
RD12M-B	2-3
RD12M-T1B	2-3
RD12SB3-T1	2-3
RD13UJN-T1	2-3
RD20M-B	2-3
RD20M-T1B	2-3
RD2.0UH-T1	2-3
RD2.4UH-T1	2-3
RD2.7UH-T1	2-3
RD4.7E-B	2-3
RD4.7ESB2	2-3
RD4.7UH-T1	2-3
RD6.2UJN-T1	2-3
RD6.8M-B	2-3
RD6.8M-T1B	2-3
RD8.2UJN-T1	2-3
RH-1C	2-3
SC802-04	2-3
SC802-04-TE12RA	2-3

TRANSISTOR	PAGE
2SA1162-G	2-4
2SA1213Y-TE12L	2-4
2SA1385-Z-K	2-4
2SA1413-Z	2-4
2SA1610-T1Y34	2-4
2SA1610-Y33	2-4
2SA1611-M5M6	2-4
2SA1611-M6	2-4
2SA1611-T1M7	2-4
2SA1611T1-M5M6	2-4
2SA1766-TD	2-4
2SA812-T1M7	2-4
2SB1114-T1ZL	2-4
2SB1115-T1YL	2-4
2SB1115A-YQ	2-4
2SB1121-ST	2-4
2SB798-DL	2-4
2SC1623-L5L6	2-4
2SC1623-T1L7	2-4
2SC2873Y-TE12L	2-4
2SC3115-D27	2-4
2SC3115-T1D27	2-4
2SC3518-L	2-4
2SC3518-ZL-E2	2-4
2SC3632-Z	2-4
2SC4176-B34	2-4
2SC4176-B35	2-4
2SC4176-T1B34	2-4
2SC4176-T1B35	2-4
2SC4177-L6	2-4
2SC4177-T1L7	2-4
2SD1614-T1XL	2-4
2SD1621-ST	2-4
2SD1623-S	2-4
2SD596DV345	2-4
2SD596T1-DV345	2-4

TRANSISTOR	PAGE
2SJ182S	2-4
2SJ332S	2-4
2SJ332S-TL	2-4
2SJ356-E2	2-4
2SK1374	2-4
2SK1374-TX	2-4
2SK1690	2-4
2SK508-K51	2-4
2SK508-T1K51	2-4
2SK620	2-4
2SK620-TX	2-4
2SK739-Z	2-4
2SK739-Z-T2	2-4
2SK852-T1X4	2-4
2SK852-X4	2-4
DTA114EE	2-4
DTA114EE-TL	2-4
DTA143XUA-T106	2-4
DTC114EE	2-4
DTC114EE-TL	2-4
DTC114EKA-T146	2-4
DTC124EE	2-4
DTC124EE-TL	2-4
DTC143XKA-T146	2-4
DTC143XU	2-4
DTC143XUA-T106	2-4
DTC144EUA-T106	2-4
PS2701-1-E3	2-5
PS2701-1-E3-L	2-5
TLP560J	2-5
XP6534	2-5
XP6534-TX	2-5

Index

IC	PAGE
74ACT125SJ	2-5
74ACT125SJ-L1	2-5
74LCX240SJX	2-5
74LCX244SJX	2-5
74LCX245MTCX	2-6
74LCX574SJX	2-6
AK5390-VS	2-6
AT27C512R-15JC	2-7
CLC505AJE	2-7
CLC505AJE-T	2-7
CXA1450M	2-7
CXA1450M-TH	2-7
CXA1451M	2-7
CXD1177Q	2-8
CXD1262J	2-8
CXD2306Q	2-9
CXD2555Q	2-9
CXD8072Q	2-10
CXK1203AR	2-10
CXK1203AR-T4	2-10
EPM7032QC44-15	2-11
HD151015T	2-7
HD151015TEL	2-7
HD6475208F10	2-12
HD6475328F10	2-14
HN58C66FP-25	2-11
HN58C66SFP25TZ	2-11
LM358PS	2-11
LM358PS-E20	2-11
LM35DM	2-11
LM4040AIM3-2.5	2-13
LM4040BIM3-5.0	2-13
LM4040BIM3X-5.0	2-13
M27V201-200L6	2-13
M5207L01	2-15
M62021FP	2-15
M62352GP	2-15
M62352GP-75ED	2-15
MAX202CSE	2-16
MAX202CSE-TE2	2-16
MB88346BPFV	2-16
MB88346BPFV-EF	2-16
MB88351PFV	2-16
MB88351PFV-ER	2-16
MC1495M	2-16
MC74ACT08M	2-17
MC74ACT86M	2-17
MC74HC4046AF	2-17
MC74HC4046AFEL	2-17
MC74HC4051F	2-17
MC74HC4051FEL	2-17
MC74HC4052F	2-17
MC74HC4052FEL	2-17
MC74HC75F	2-18
NJM062V(TE2)	2-18
NJM1496V-TE2	2-18
NJM3414AM-TE2	2-18
NJM4558V-TE2	2-18
PC410	2-18
PCF8574T-T	2-19
PCF8591T	2-19
REF-03GSR	2-19
RTC-4553B	2-20
SC7S32F	2-20
SN74HC00APW-E05	2-20
SN74HC00APW-E20	2-20
SN74HC04APW-E05	2-20
SN74HC04APW-E20	2-20
SN74HC138APW-E05	2-20
SN74HC164ANS	2-21
SN74HC164ANS-E05	2-21
SN74HC244ANS	2-5
SN74HC244ANS-E05	2-5
SN74HC32APW-E05	2-21
SN74HC373ANS	2-21
SN74HC373ANS-E05	2-21
SN74HCT541APW-E05	2-21
SN75158PS	2-21
SN75158PS-E05	2-21
SN75179BPS	2-21
SN75179BPS-E05	2-21
SPT7860SCT	2-22
TC4066BFS-EL	2-22
TC4W53F	2-22
TC4W53F(TE12R)	2-22
TC4W53FU	2-22
TC4W53FU(TE12R)	2-22
TC4W66FU(TE12R)	2-22
TC74AC74FS	2-23
TC74AC74FS(EL)	2-23
TC74AC86FS(EL)	2-17
TC74ACT08F	2-17
TC74ACT374FS(EL)	2-23
TC74HC4053AFS	2-23
TC74HC4053AFS-EL	2-23
TC74HC4538AFS-EL	2-23
TC74VHC244FS	2-5
TC7S00F	2-24
TC7S00F(TE85R)	2-24
TC7S00FU(TE85R)	2-24
TC7S02FU	2-24
TC7S02FU-TE85L	2-24
TC7S04FU(TE85R)	2-24
TC7S08FU(TE85R)	2-24
TC7S14F(TE85R)	2-24
TC7S14F-TE85L	2-24
TC7S32F(TE85R)	2-20
TC7S32FU(TE85R)	2-20
TC7S66FU	2-24
TC7S66FU(TE85R)	2-24
TC7S86FU	2-24
TC7S86FU(TE85R)	2-24
TC7SH00FU-TE85R	2-24
TC7SH02FU	2-24
TC7SH02FU-TE85R	2-24
TC7SH04FU	2-24
TC7SH04FU-TE85R	2-24
TC7SH08FU-TE85R	2-24
TC7SH32FU-TE85R	2-20
TC7W02F	2-25
TC7W02FU(TE12R)	2-25
TC7W04FU(TE12R)	2-25
TC7W08FU	2-25
TC7W08FU(TE12R)	2-25
TC7W74FU	2-25
TC7W74FU(TE12R)	2-25
TL062CPW	2-18
TL062CPW-E05	2-18
TL064CPW	2-25
TL064CPW-E05	2-25
TL084CPW-E05	2-25
TL084CPW-E20	2-25
TL1451ACNS	2-25
TL1451ACNS-E05	2-25
TL1451ACPW-E05	2-25
TL712CPS	2-26
TL712CPS-E05	2-26
TL7705CPS-B	2-26
TL7705CPS-B-E05	2-26
TLC272CPW-E05	2-26
TLC27L2CPS	2-26
TLC27L2CPS-ELL2000	2-26
TLC27L4CPW	2-26
TLC27L4CPW-E05	2-26
TLC27M2CPS	2-26
TLC27M2CPS-E05	2-26
TLC339CPW-E05	2-26
TLC393CPS	2-26
TLC393CPS-E05	2-26
TLC393CPW-E05	2-26
UPC1093T	2-26
UPC1093T-E1	2-26
UPC814G2	2-27
UPD42102G-5-E2	2-27
UPD4702G	2-27
UPD6453GT-610	2-28
UPD6453GT-610-E2	2-28
UPD71051GB-10-3B4	2-29
UPD71055GB-10-3B4	2-29
X24164SIC7000	2-27
X24C02S-3.0	2-27
X24C02S-3.0-C7000	2-27

DIODE

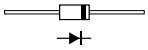

1S1588
RH-1C
1S2348HTD

-TOP VIEW-

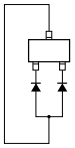

1S2836
1SS181
1SS300-TE85L
1S2835-T1
MA141WA-TX

-TOP VIEW-

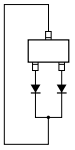

1SS184
MA141WK
1SS301-TE85L

-TOP VIEW-

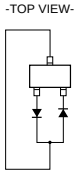

1SS226
1SS302
MA3J14300LSO
MA3J74200LSO
1SS123-T1
1SS302-TE85L

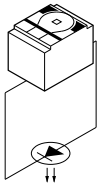

CL-200HR-C-TSL ;RED

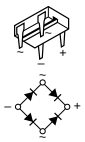

DBB10G

-TOP VIEW-

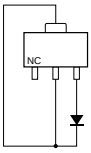

EA30QS04-F

-TOP VIEW-

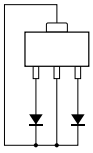

EA60QC06-F
EA60QC06-TE16F2

-TOP VIEW-

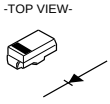

EC10QS06-TE12L5

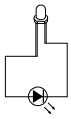

GL3UR8 ;RED

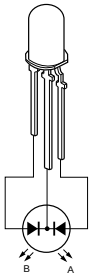

GL5ED5 ;A = RED,B = YELGRN

-TOP VIEW-

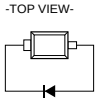

MA728
MA728-TX

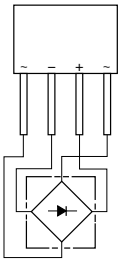

LB-156

-TOP VIEW-

MA8047
MA8120-L
RD10UJN-T1
RD2.0UH-T1
RD4.7UH-T1
MA8047-TX
MA8120-L-TX

-TOP VIEW-

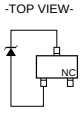

RD10M-B1
RD12M-B
RD20M-B
RD6.8M-B
RD10M-T1B1
RD12M-T1B
RD20M-T1B
RD6.8M-T1B

-TOP VIEW-

RD12SB3-T1
RD13UJN-T1
RD2.4UH-T1
RD2.7UH-T1
RD6.2UJN-T1
RD8.2UJN-T1

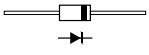

RD4.7ESB2
RD4.7E-B

-TOP VIEW-

SC802-04
SC802-04-TE12RA

TRANSISTOR

-TOP VIEW-

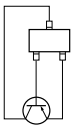

2SA1162-G
2SA1610-Y33
2SA1611-M5M6
2SA1611-M6
2SA812-T1M7
2SA1610-T1Y34
2SA1611T1-M5M6
2SA1611-T1M7

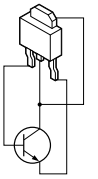

2SC3632-Z

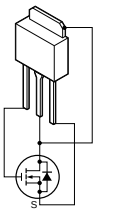

2SK1690

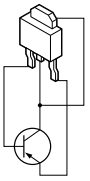

2SA1385-Z-K
2SA1413-Z

-TOP VIEW-

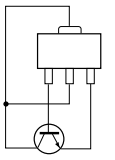

2SD1621-ST
2SD1623-S
2SD1614-T1XL
2SC2873Y-TE12L

-TOP VIEW-

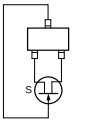

2SK508-K51
2SK852-X4
2SK508-T1K51
2SK852-T1X4

-TOP VIEW-

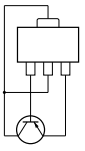

2SA1766-TD
2SB1115A-YQ
2SB1121-ST
2SB798-DL
2SB1115-T1YL
2SB1114-T1ZL
2SA1213Y-TE12L

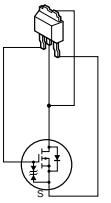

2SJ182S
2SJ332S
2SJ332S-TL

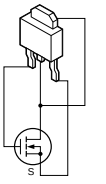

2SK739-Z
2SK739-Z-T2

-TOP VIEW-

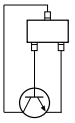

2SC1623-L5L6
2SC3115-D27
2SC4176-B34
2SC4176-B35
2SC4177-L6
2SD596DV345
2SC1623-T1L7
2SC3115-T1D27
2SC4176-T1B34
2SC4176-T1B35
2SC4177-T1L7
2SD596T1-DV345

-TOP VIEW-

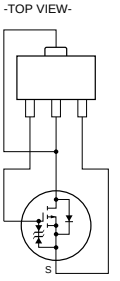

2SJ356-E2

-TOP VIEW-

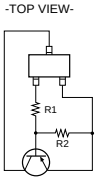

DTA114EE (R1 = 10 K, R2 = 10 K)
DTA143XUA-T106 (R1=4.7K, R2=10K)
DTA114EE-TL

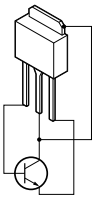

2SC3518-L
2SC3518-ZL-E2

-TOP VIEW-

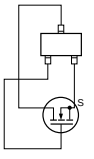

2SK1374
2SK620
2SK1374-TX
2SK620-TX

-TOP VIEW-

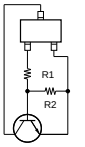

DTC114EE (R1 = 10 K, R2 = 10 K)
DTC114EKA-T146 (R1=10K, R2=10K)
DTC124EE (R1 = 22 K,R2 = 22 K)
DTC143XKA-T146 (R1 = 4.7 K, R2 = 10 K)
DTC143XU (R1=4.7K, R2=10K)
DTC144EKA-T146 (R1=47K, R2=47K)
DTC144EUA-T106 (R1=47K, R2=47K)
DTC114EE-TL
DTC124EE-TL
DTC143XUA-T106

http://getMANUAL.com

IC

—TOP VIEW—

PS2701-1-E3-L
PS2701-1-E3

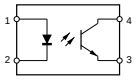

-TOP VIEW-

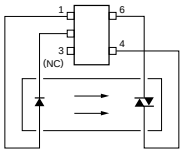

TLP560J

-TOP VIEW-

XP6534
XP6534-TX

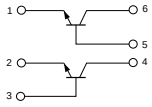

74ACT125SJ (NS)FLAT PACKAGE
74ACT125SJ-L1

C-MOS BUS BUFFER GATES WITH 3-STATE OUTPUT
-TOP VIEW-

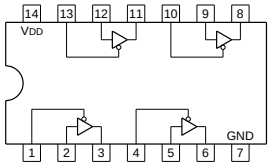

G	A	Y
0	0	0
0	1	1
1	X	HI-Z

0 ; LOW LEVEL
1 ; HIGH LEVEL
X ; DON'T CARE
HI-Z ; HIGH IMPEDANCE

NOTE :

TYPE	VDD
74AC/ 74VHC	+2 to +5.5V
74ACT/74HCT	+4.5 to +5.5V
74LCX	+2 to +3.6V
74LVT/74LVC	+2.7 to +3.6V
OTHER TYPES	+2 to +6V

74LCX240SJX (NS)FLAT PACKAGE

C-MOS 3-STATE INVERTER/LINE DRIVER
-TOP VIEW-

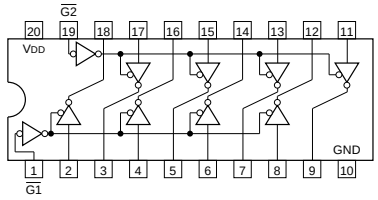

G	A	Y
0	0	1
0	1	0
1	X	HI-Z

0 ; LOW LEVEL
1 ; HIGH LEVEL
X ; DON'T CARE
HI-Z ; HIGH IMPEDANCE

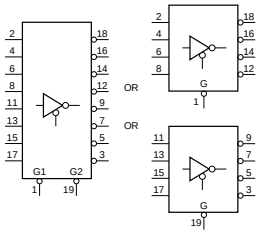

NOTE:

TYPE	VDD
74HC	+2 to +6 V
74ACT/74BC/74HCT	+4.5 to +5.5 V
74LCX	+2 to +3.6 V
74AC/74VHC	+2 to +5.5 V

74LCX244SJX (NS)FLAT PACKAGE
SN74HC244ANS (TI)FLAT PACKAGE
TC74VHC244FS(EL) (TOSHIBA)FLAT PACKAGE(SMALL)
SN74HC244ANS-E05

C-MOS BUS BUFFER WITH 3-STATE OUTPUTS
-TOP VIEW-

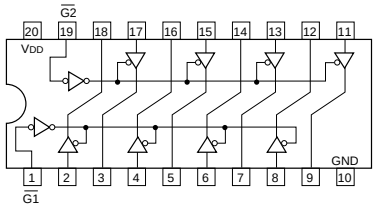

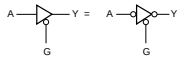

G	A	Y
0	0	0
0	1	1
X	X	HI-Z

0 ; LOW LEVEL
1 ; HIGH LEVEL
X ; DON'T CARE
HI-Z ; HIGH IMPEDANCE

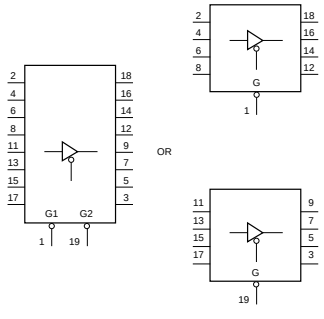

NOTE:

TYPE	VDD
74HC 40H	+2 to +6V
74ACT 74BCT 74FCT 74HCT	+4.5 to +5.5V
74LCX	+2 to +3.6V
74AC/74VHC	+2 to +5.5V

74LCX245MTCX (NS)FLAT PACKAGE

C-MOS BILATERAL BUS TRANSCEIVERS WITH 3-STATE OUTPUTS
-TOP VIEW-

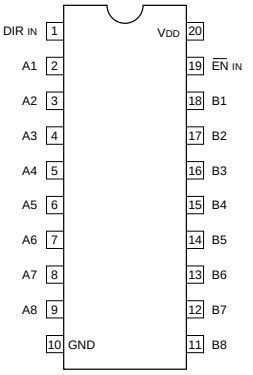

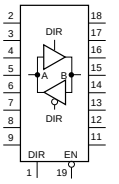

EN	DIR	OPERATION
0	0	B to A
0	1	A to B
1	X	HI-Z

0 ; LOW LEVEL
1 ; HIGH LEVEL
X ; DON'T CARE
HI-Z ; HIGH IMPEDANCE

NOTE:

TYPE	VDD
74HC	+2 to +6V
74ABT 74ACT 74BCT 74HCT	+4.5 to +5.5V
74AC 74VHC	+2 to +5.5V
74LCX	+2 to +3.6V
74LVT	+2.7 to +3.6V

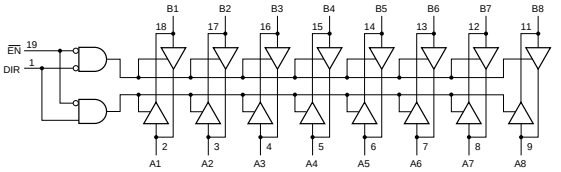

74LCX574SJX (NS)FLAT PACKAGE

C-MOS 3-STATE D-TYPE EDGE-TRIGGERED FLIP-FLOP
-TOP VIEW-

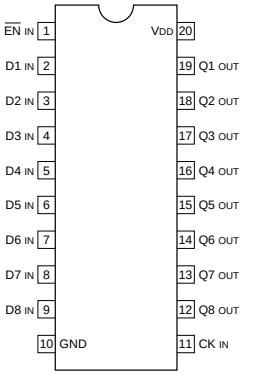

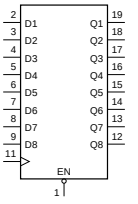

EACH FLIP-FLOP

INPUTS			OUT
EN	CK	D	Q
0	↑	1	1
0	↑	0	0
0	↓	X	Q0
1	X	X	HI-Z

0 ; LOW LEVEL
1 ; HIGH LEVEL
X ; DON'T CARE
HI-Z ; HIGH IMPEDANCE
Q0 ; NO CHANGE

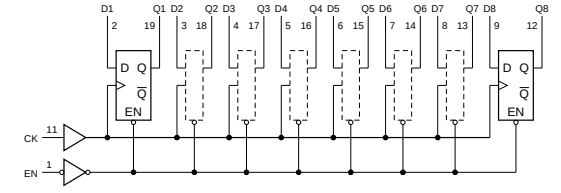

NOTE;

TYPE	VDD
74HC	+2 to +6V
74AC/74VHC	+2 to +5.5V
74ACT/74FCT/74HCT	+4.5 to +5.5V
74LCX	+2 to 3.6V
74LVC	+2.7 to 3.6V

AK5390-VS (ASAHI KASEI)FLAT PACKAGE

18-BIT STEREO A-D CONVERTER
-TOP VIEW-

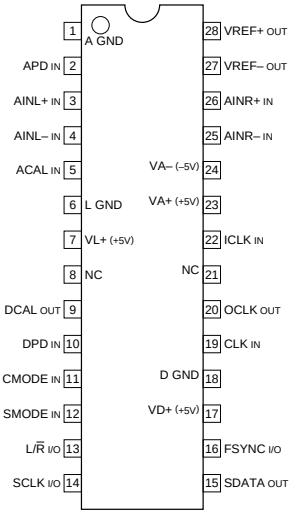

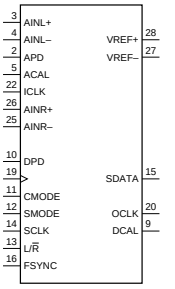

INPUT
ACAL ; ANALOG CALIBRATION
(H : AGND)
(L : ANALOG SIGNAL INPUT = AINL, AINR)
AINL + ; CAHNNEL L ANALOG POSITIVE INPUT
AINL – ; CAHNNEL L ANALOG NEGATIVE INPUT
AINR + ; CAHNNEL R ANALOG POSITIVE INPUT
AINR – ; CAHNNEL R ANALOG NEGATIVE INPUT
APD ; POWER DOWN FOR ANALOG SECTION
CLK ; MASTER CLOCK
(CMODE = H : 384fs)
(CMODE = L : 256fs)
CMODE ; MASTER CLOCK SELECT
(L : CLK = 256fs, 12.288 MHz @fs = 48 KHz)
(H : CLK = 384fs, 18.432 MHz @fs = 48 KHz)
DPD ; POWER DOWN FOR DIGITAL SECTION
ICLK ; 128fs CLOCK
SMODE ; INTERFACE CLOCK SELECT
(L : SUB MODE)
(H : MASTER MODE)

OUTPUT
DCAL ; DIGITAL CALIBRATION
OCLK ; 128fs CLOCK
SDATA ; SERIAL DATA
VREF + ; REFERENCE POSITIVE VOLTAGE (+3.68 V)
VREF – ; REFERENCE NEGATIVE VOLTAGE (–3.68 V)

INPUT/OUTPUT
FSYNC ; FRAME SYNC CLOCK
L/R ; INPUT CAHNNEL SELECT
(SUB MODE : fs CLK INPUT)
(MASTER MODE : fs CLK OUTPUT)
SCLK ; SERIAL DATA CLOCK
(SUB MODE : 64fs CLK INPUT)
(MASTER MODE : 64fs CLK OUTPUT)

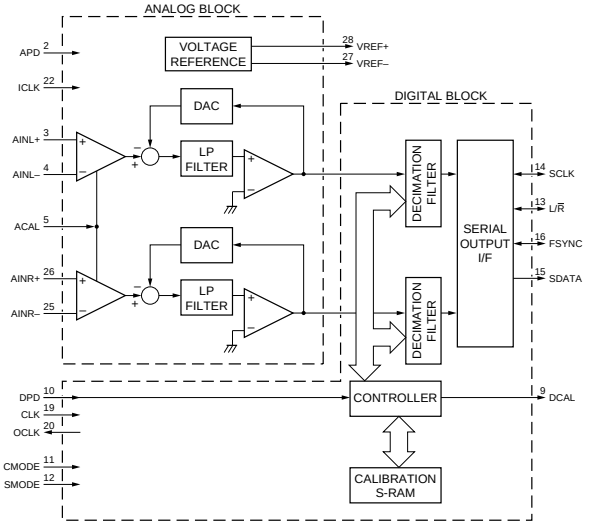

AT27C512R-15JC (ATMEL)

C-MOS 512K (65536 × 8)-BIT UV-EPROM
-BOTTOM VIEW-

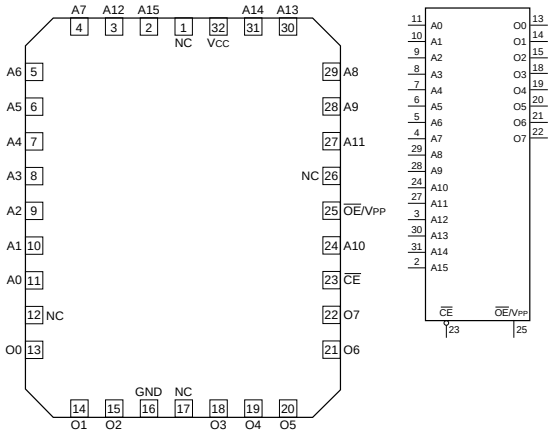

INPUT
A0-A15 ; ADDRESS BUS
$\overline{CE}$; CHIP ENABLE
$\overline{OE}$/VPP ; OUTPUT ENABLE

OUTPUT
O0-O7 ; DATA BUS

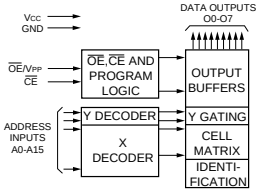

CXA1451M (SONY)

WIDEBAND VIDEO SWITCH
--TOP VIEW-

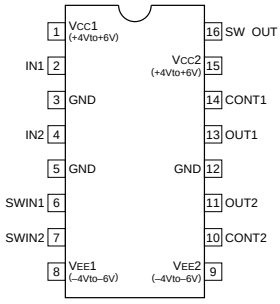

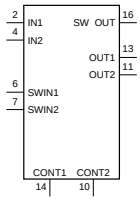

INPUT
CONT1, 2 ; POWER SAVE CONTROL PIN OF DRV. 1 AND DRV. 2
INT1, 2 ; 1/2-CHANNEL INPUT PIN
SWIN1, 2 ; IN1/IN2 PINS SWITCH CONTROL PIN

OUTPUT
OUT1, 2 ; OUTPUT PIN OF DRV. 1/2
SWOUT ; OUTPUTS IN1 PIN OR IN2 PIN WHICH HAS BEEN SELECTED BY SWITCH

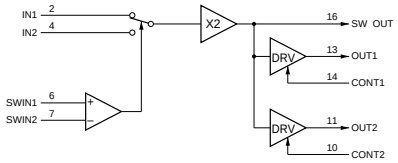

CLC505AJE (COMLINEAR)FLAT PACKAGE
CLC505AJE-T

OPERATIONAL AMPLIFIER
— TOP VIEW —

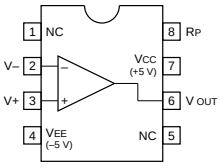

CXA1450M (SONY)FLAT PACKAGE
CXA1450M-TH (SONY)FLAT PACKAGE

VIDEO SIGNAL SWITCH
-TOP VIEW-

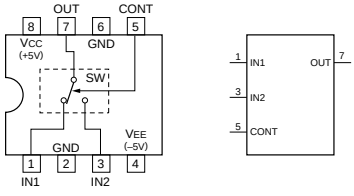

HD151015T (HITACHI)FLAT PACKAGE
HD151015TEL

C-MOS 9-BIT LEVEL SHIFTER/TRANSCEIVER WITH 3-STATE OUTPUTS
— TOP VIEW —

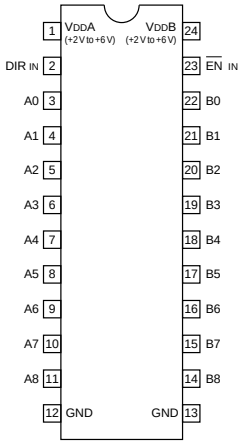

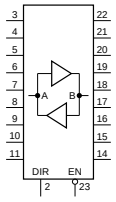

EN	DIR	OPERATION
0	0	B to A
0	1	A to B
1	X	HI-Z

0 ; LOW LEVEL
1 ; HIGH LEVEL
X ; DON'T CARE
HI-Z ; HIGH IMPEDANCE

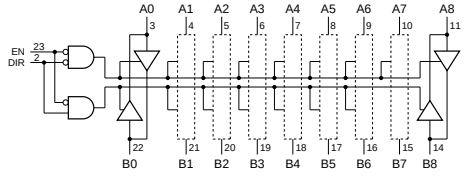

CXD1177Q (SONY)

C-MOS Y/C 2 CHANNEL D/A CONVERTER
-TOP VIEW-

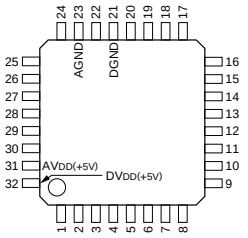

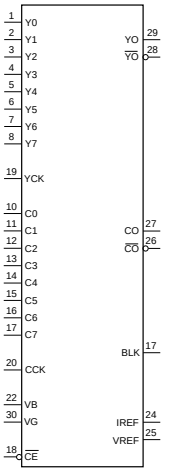

(AVDD, DVDD=5V)

PIN No.	I/O	SIGNAL	PIN No.	I/O	SIGNAL
1	I	Y0	17	O	BLK
2	I	Y1	18	I	$\overline{CE}$
3	I	Y2	19	I	YCK
4	I	Y3	20	I	CCK
5	I	Y4	21	—	DGND
6	I	Y5	22	I	VB
7	I	Y6	23	—	AGND
8	I	Y7	24	O	IREF
9	I	C0	25	O	VREF
10	I	C1	26	O	$\overline{CO}$
11	I	C2	27	O	CO
12	I	C3	28	O	$\overline{YO}$
13	I	C4	29	O	YO
14	I	C5	30	I	VG
15	I	C6	31	—	AVDD
16	I	C7	32	—	DVDD

INPUT
C0-C7 ; C DATA
$\overline{CCK}$; CHROMA CLOCK
$\overline{CE}$; CHIP ENABLE
VB ; BIAS VOLTAGE
VG ; GND VOLTAGE
Y0-Y7 ; Y DATA
YCK ; LUMINANCE CLOCK

OUTPUT
BLK ; BLANKING PULSE
CO, $\overline{CO}$; C DATA
IREF ; CURRENT REFERENCE
VREF ; VOLTAGE REFERENCE
YO, $\overline{YO}$; Y DATA

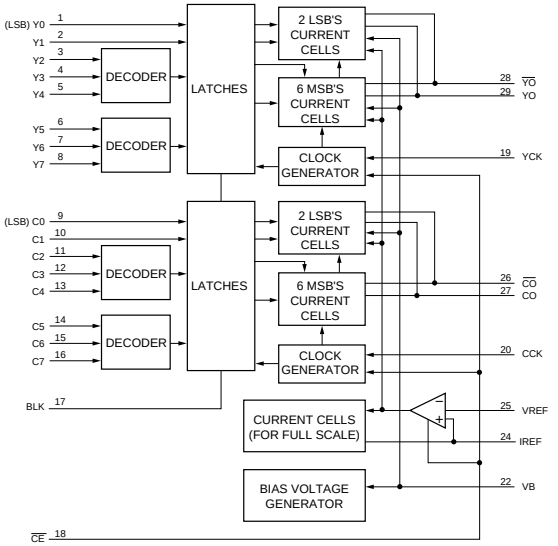

CXD1262J (SONY)

C-MOS CCD H CLOCK DRIVER
-TOP VIEW-

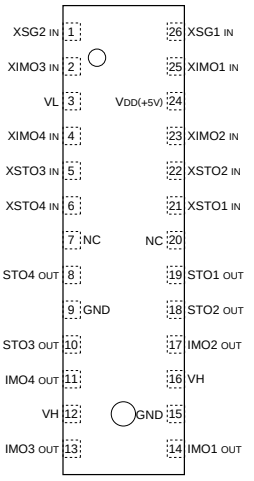

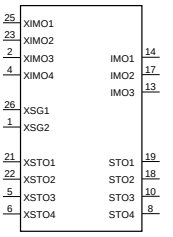

INPUT
VH ; VOLTAGE HIGH POWERSOURCE (+15V)
VL ; VOLTAGE LOW POWERSOURCE (–9V)
XIMO1-XIMO4 ; OUT CONTROL INVERSION (XIMO1-XIMO4)
XSG1-XSG2 ; OUT CONTROL INVERSION (XSG1-XSG2)
XSTO1-XSTO4 ; OUT CONTROL INVERSION (XSTO1-XSTO2)

OUTPUT
IMO1-IMO4 ; HIGH TENSION (IMO1-IMO4)
STO1-STO4 ; HIGH TENSION (STO1-STO4)

INPUTS			OUTPUTS	
XIM1, 3	XSG1, 2	XIM2, 4, XST1 to 4	IM1, 3	IM2, 4, ST1 to 4
0	1	×	VM	×
1	1	×	VL	×
0	0	×	VH	×
1	0	×	Z	×
×	×	0	×	VM
×	×	1	×	VL

0 ; LOW LEVEL × ; DON'T CARE
1 ; HIGH LEVEL HI-Z ; HIGH IMPEDANCE

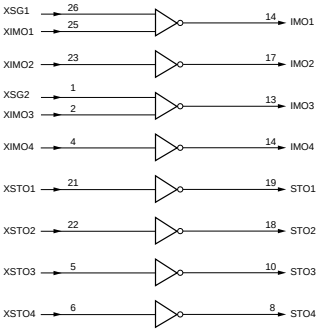

CXD2306Q (SONY)

C-MOS 10-BIT 75MSPS 1CH D/A CONVERTER

-TOP VIEW-

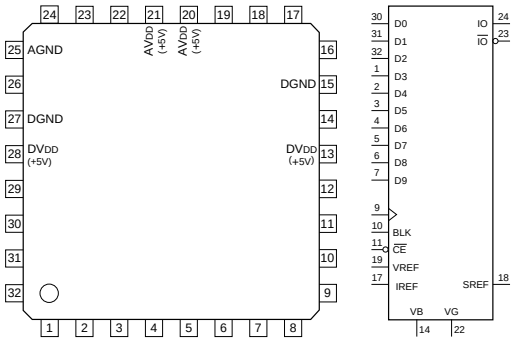

(AVDD, DVDD=+5V)

PIN No.	I/O	SIGNAL	PIN No.	I/O	SIGNAL
1	I	D3	17	I	IREF
2	I	D4	18	O	SREF
3	I	D5	19	I	VREF
4	I	D6	20	—	AVDD
5	I	D7	21	—	AVDD
6	I	D8	22	O	VG
7	I	D9(MSB)	23	O	$\overline{IO}$
8	—	NC	24	O	IO
9	I	CK	25	—	AGND
10	I	BLK	26	—	NC
11	I	$\overline{CE}$	27	—	DGND
12	—	NC	28	—	DVDD
13	—	DVDD	29	—	NC
14	O	VB	30	I	D0(LSB)
15	—	DGND	31	I	D1
16	—	NC	32	I	D2

BLK ; BLANKING PULSE INPUT
$\overline{CE}$; CHIP ENABLE
CK ; CLOCK INPUT
D0-7 ; DIGITAL DATA INPUTS
IO ; CURRENT OUTPUT
$\overline{IO}$; INVERT CURRENT OUTPUT
IREF ; CURRENT REFERENCE INPUT
SREF ; INDEPENDENT CONSTANT VOLTAGE OUTPUT
VB, VG ; FOR CAPACITOR
VREF ; VOLTAGE REFERENCE INPUT

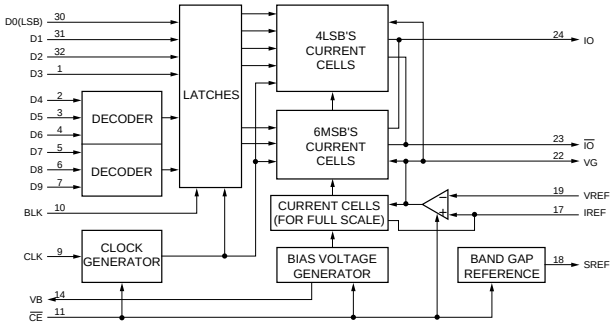

CXD2555Q (SONY)

C-MOS 1-BIT AD/DA CONVERTER

-TOP VIEW-

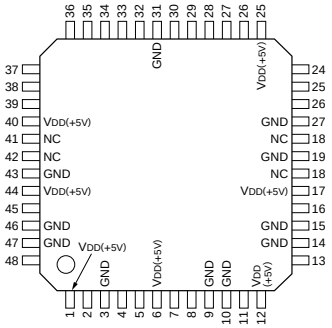

(VDD = +5V)

PIN No.	I/O	SIGNAL	PIN No.	I/O	SIGNAL	PIN No.	I/O	SIGNAL	PIN No.	I/O	SIGNAL
1	—	VDD	13	O	AOUT2(–)	25	—	VDD	37	I	DASL0
2	O	AOUT1(+)	14	—	GND	26	I	MS	38	I	DASL1
3	—	GND	15	—	GND	27	I/O	LRCK	39	I	WO
4	O	UCLK	16	I	AIN2	28	I/O	BCK	40	—	VDD
5	O	XCLK	17	—	VDD	29	I	SIN	41	—	NC
6	—	VDD	18	—	NC	30	O	SOUT	42	—	NC
7	I	XTLI	19	—	GND	31	—	GND	43	—	GND
8	O	XTLO	20	—	NC	32	I	MASL	44	—	VDD
9	—	GND	21	—	GND	33	I	MLSL	45	I	AIN1
10	—	GND	22	O	XMCK2	34	I	XSL0	46	—	GND
11	O	AOUT2(+)	23	I	TEST	35	I	XSL1	47	—	GND
12	—	VDD	24	I	CLR	36	I	XSL2	48	O	AOUT1(–)

INPUT

AIN1, AIN2 ; CH1/CH2 AD CONVERTER ANALOG INPUTS
CLR ; SYSTEM CLEAR (H: NORMAL/L: CLEAR)
DASL0 ; IC TEST PIN (H: NORMAL)
DASL1 ; IC TEST PIN (L: NORMAL)
MASL ; FOR SERIAL I/O WITH 16-BIT SERIAL DATA, SELECTS EITHER THE FIRST 16-BIT SLOT OR THE LAST 16-BIT SLOT OF THE 32-BIT SLOT. (H: FORWARD PACKING, L: REARWARD PACKING)
MLSL ; LSB FIRST/MSB FIRST SELECT (H: MSB FIRST/L: LSB FIRST)
MS ; MASTER/SLEAVE MODE SELECT (H: MASTER MODE/L: SLEAVE MODE)
SIN ; SERIAL DATA INPUT (1 SAMPLING 2 CHANNEL)
TEST ; TEST PIN
WO ; WINDOW OPEN FOR SYNCRONOUS (H: WINDOW MASK/L: WINDOW OPEN)
XSL0, XSL1, XSL2 ; CRYSTAL SELECT
XTL1 ; CRYSTAL OSCILLATOR INPUT

OUTPUT

AOUT1(+), AOUT2(+) ; CH1/CH2 DA CONVERTER ANALOG (+) OUTPUTS
AOUT1(–), AOUT2(–) ; CH1/CH2 DA CONVERTER ANALOG (–) OUTPUTS
SOUT ; SERIAL OUTPUT (1 SAMPLING 2 CHANNEL)
UCLK ; USER CLOCK
XCLK ; 256Fs CLOCK
XMCK2 ; IC TEST PIN (L: NORMAL)
XTL0 ; CRYSTAL OSCILLATOR OUTPUT

INPUT/OUTPUT

BCK ; SERIAL BIT TRANSFER CLOCK FOR SERIAL I/O
LRCK ; SAMPLING FREQUENCY CLOCK FOR SERIAL I/O

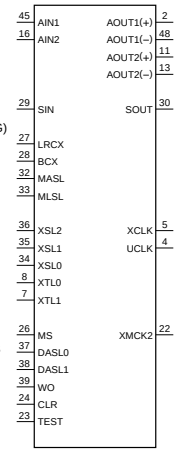

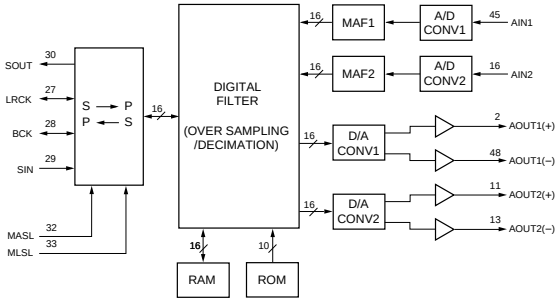

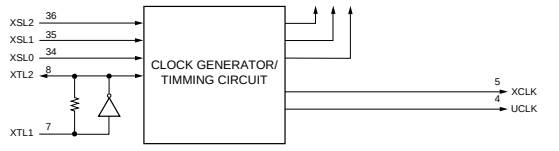

CXD8072Q (SONY)FLAT PACKAGE

C-MOS SERIAL TO PARALLEL CONVERTER

-TOP VIEW-

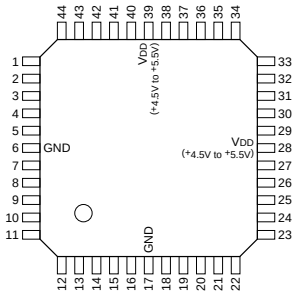

(VDD = +4.5V to +5.5V)

PIN NO.	I/O	SYMBOL	PIN NO.	I/O	SYMBOL	PIN NO.	I/O	SYMBOL	PIN NO.	I/O	SYMBOL
1	I	MODE	12	O	O09	23	O	O19	34	O	O29
2	O	O00	13	O	O10	24	O	O20	35	O	O30
3	O	O01	14	O	O11	25	O	O21	36	O	O31
4	O	O02	15	O	O12	26	O	O22	37	O	O32
5	O	O03	16	O	O13	27	O	O23	38	O	O33
6	–	GND	17	–	GND	28	–	VDD	39	–	VDD
7	O	O04	18	O	O14	29	O	O24	40	O	O34
8	O	O05	19	O	O15	30	O	O25	41	O	O35
9	O	O06	20	O	O16	31	O	O26	42	I	SEDA
10	O	O07	21	O	O17	32	O	O27	43	I	LD
11	O	O08	22	O	O18	33	O	O28	44	I	SOCK

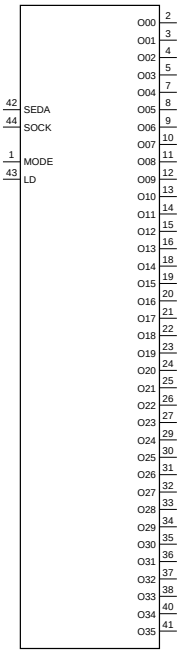

LD ; LOAD PULSE
MODE ; MODE SELECT
SEDA ; SERIAL DATA
SOCK ; SERIAL CLOCK
O01-O35 ; OUTPUT

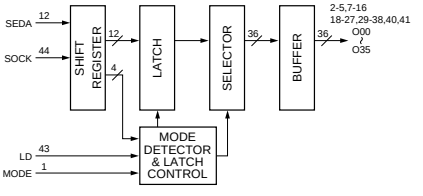

CXK1203AR (SONY)
CXK1203AR-T4

C-MOS DIGITAL LINE MEMORY

—TOP VIEW—

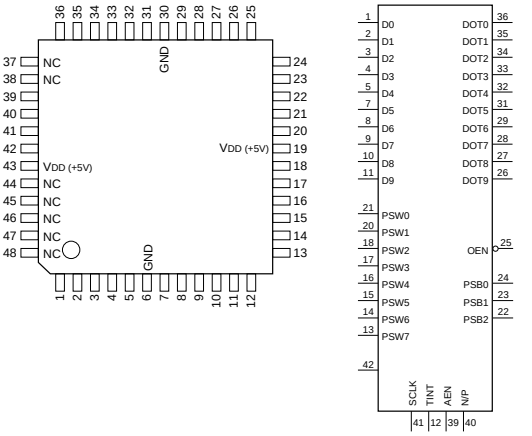

(VDD = +5V)

PIN NO.	I/O	SIGNAL	PIN NO.	I/O	SIGNAL	PIN NO.	I/O	SIGNAL	PIN NO.	I/O	SIGNAL
1	I	D0	13	I	PSW7	25	I	$\overline{OEN}$	37	—	N.C
2	I	D1	14	I	PSW6	26	O	DOT9	38	—	N.C
3	I	D2	15	I	PSW5	27	O	DOT8	39	I	AEN
4	I	D3	16	I	PSW4	28	O	DOT7	40	I	N/P
5	I	D4	17	I	PSW3	29	O	DOT6	41	I	SCLK
6	—	GND	18	I	PSW2	30	—	GND	42	I	CLK
7	I	D5	19	—	VDD	31	O	DOT5	43	—	VDD
8	I	D6	20	I	PSW1	32	O	DOT4	44	—	N.C
9	I	D7	21	I	PSW0	33	O	DOT3	45	—	N.C
10	I	D8	22	I	PSB2	34	O	DOT2	46	—	N.C
11	I	D9	23	I	PSB1	35	O	DOT1	47	—	N.C
12	I	TINT	24	I	PSB0	36	O	DOT0	48	—	N.C

AEN ; LINE MEMORY SELECT
CLK ; CLOCK
DIN0-DIN9 ; VIDEO DATA INPUT
DOT0-DOT9 ; VIDEO DATA OUTPUT
N/P ; NTSC/PAL/SECAM SELECT
OEN ; OUTPUT ENABLE
PSB0-PSB2 ; DELAY STEP SELECT (1 BITxN)
PSW0-PSW7 ; DELAY STEP SELECT (8 BITxN)
SCLK ; CLOCK EDGE SELECT
TINT ; TEST

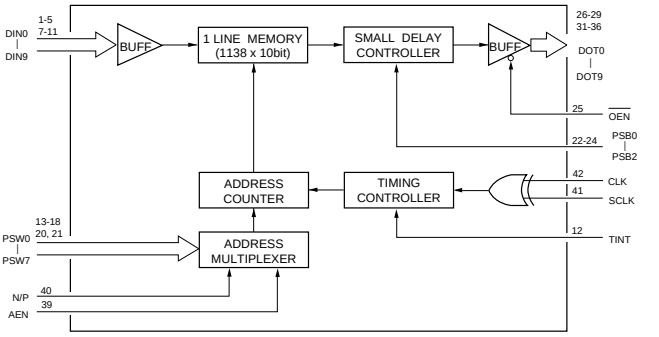

EPM7032QC44-15 (ALTERA)

C-MOS ERASABLE PLD
-TOP VIEW-

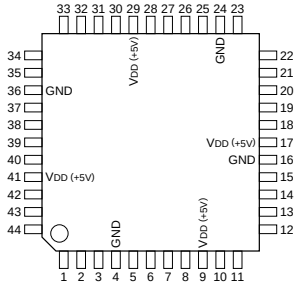

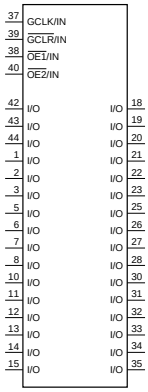

(VDD = +5V)

PIN NO.	I/O	SIGNAL	PIN NO.	I/O	SIGNAL	PIN NO.	I/O	SIGNAL	PIN NO.	I/O	SIGNAL
1	I/O	I/O	12	I/O	I/O	23	I/O	I/O	34	I/O	I/O
2	I/O	I/O	13	I/O	I/O	24	—	GND	35	I/O	I/O
3	I/O	I/O	14	I/O	I/O	25	I/O	I/O	36	—	GND
4	—	GND	15	I/O	I/O	26	I/O	I/O	37	I	GCLK/IN
5	I/O	I/O	16	—	GND	27	I/O	I/O	38	I	$\overline{OE1}$/IN
6	I/O	I/O	17	—	VDD	28	I/O	I/O	39	I	$\overline{GCLR}$/IN
7	I/O	I/O	18	I/O	I/O	29	—	VDD	40	I	$\overline{OE2}$/IN
8	I/O	I/O	19	I/O	I/O	30	I/O	I/O	41	—	VDD
9	—	VDD	20	I/O	I/O	31	I/O	I/O	42	I/O	I/O
10	I/O	I/O	21	I/O	I/O	32	I/O	I/O	43	I/O	I/O
11	I/O	I/O	22	I/O	I/O	33	I/O	I/O	44	I/O	I/O

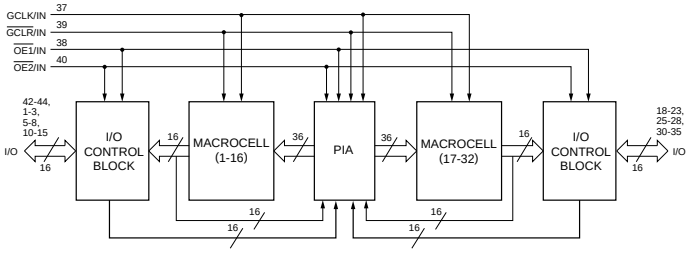

* ABOVE DIAGRAM SHOWS CONDITIONS BEFORE PROGRAMMING

HN58C66FP-25 (HITACHI)
HN58C66SFP25TZ

C-MOS 64K (8192 × 8)-BIT EEPROM
-TOP VIEW-

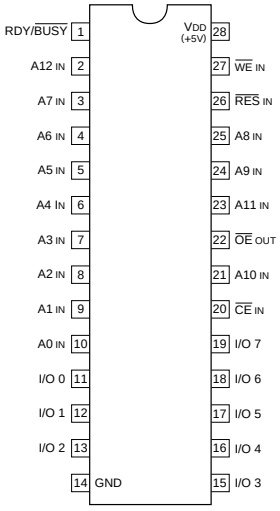

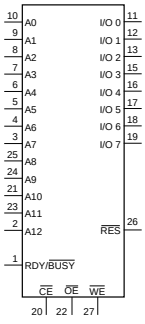

A0-A12 ; ADDRESS INPUTS
$\overline{CE}$; CHIP ENABLE INPUT
I/O 0-I/O 7 ; DATA INPUTS/OUTPUTS
$\overline{OE}$; OUTPUT ENABLE
RDY/$\overline{BUSY}$; RDY/$\overline{BUSY}$ OUTPUT
$\overline{WE}$; WRITE ENABLE INPUT
$\overline{RES}$; PROGRAM RESET INPUT

$\overline{CE}$	$\overline{OE}$	$\overline{WE}$	RDY/$\overline{BUSY}$	$\overline{RES}$	I/O TERMINAL	FUNCTION
0	0	1	HI-Z	1	DOUT	READ
1	×	×	HI-Z	×	HI-Z	STANDBY
0	1	0	HI-Z→LOW	1	DIN	WRITE
0	1	1	HI-Z	1	HI-ZL	DESELECT
×	×	1	HI-Z	×	—	WRITE INH
×	0	×	HI-Z	×	—	WRITE INH
0	0	1	LOW	1	DATA OUT (1/07)	DATA POLLING
×	×	×	HI-Z	0	HI-Z	PROGRAM RESET

0 ; LOW LEVEL
1 ; HIGH LEVEL
× ; DON'T CARE
HI-Z ; HIGH IMPEDANCE

LM35DM (NSC)FLAT PACKAGE

TEMPERATURE SENSOR
—TOP VIEW—

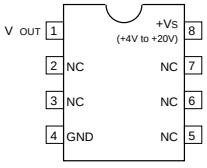

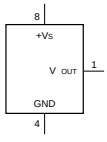

LM358PS (TI)FLAT PACKAGE
LM358PS-E20

DUAL OPERATIONAL AMPLIFIERS
— TOP VIEW —

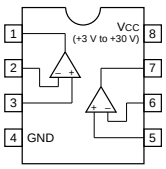

HD6475208F10 (HITACHI)

C-MOS
-TOP VIEW-

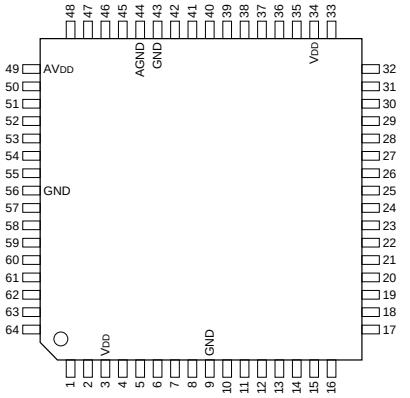

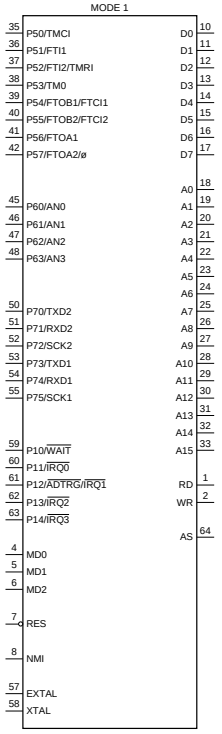

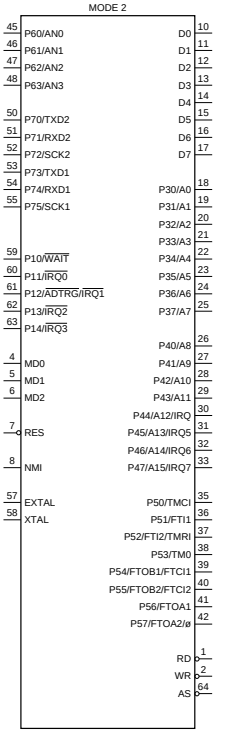

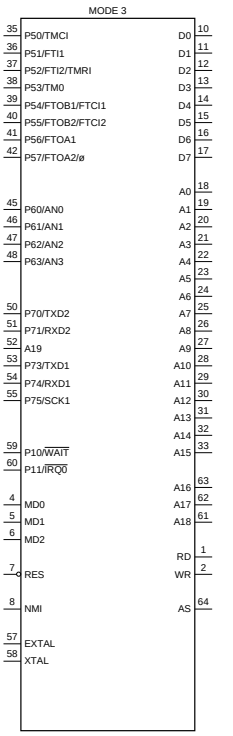

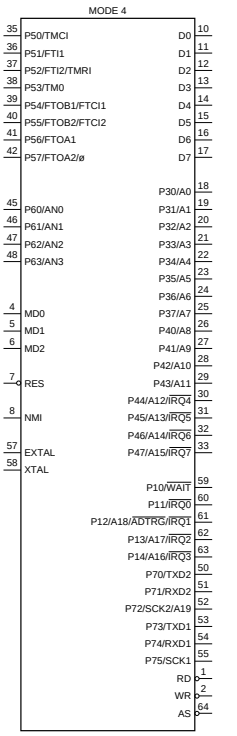

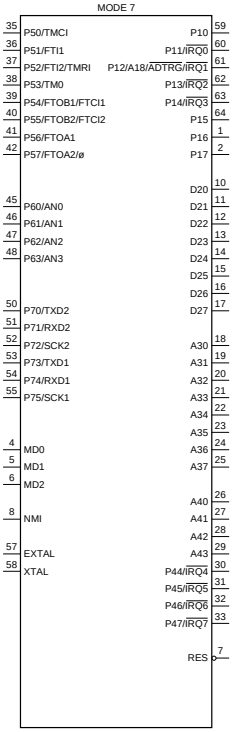

INPUTS			OPERATION MODE	CONTENTS
MD2	MD1	MD0		
0	0	1	MODE 1	EXTENSION MINIMUM MODE (ROM INVALID)
0	1	0	MODE 2	EXTENSION MINIMUM MODE (ROM VALID)
0	1	1	MODE 3	EXTENSION MAXIMUM MODE (ROM INVALID)
1	0	0	MODE 4	EXTENSION MAXIMUM MODE (ROM VALID)
1	1	1	MODE 7	SINGLE CHIP MODE

0; LOW LEVEL
1; HIGH LEVEL

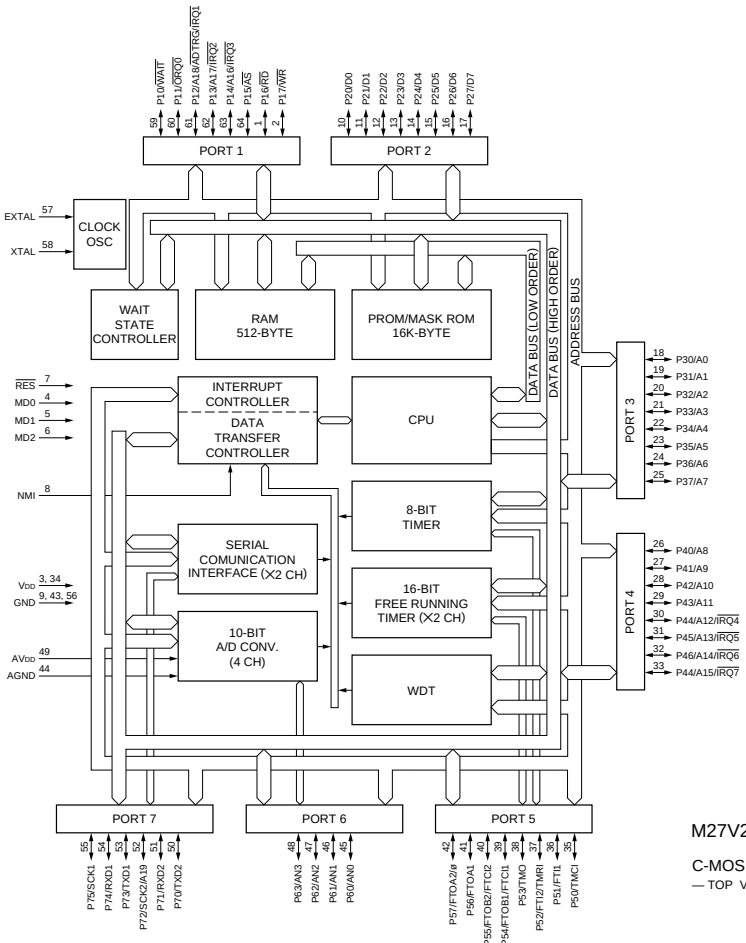

LM4040AIM3-2.5 (NS)
LM4040BIM3-5.0 (NS)
LM4040BIM3X-5.0

PRECISION MICROPOWER SHUNT VOLTAGE REFERENCE
— TOP VIEW —

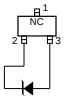

M27V201-200L6 (SGS)CHIP CARRIER

C-MOS 2M (256×8) -BIT UV ERASABLE PROM AND OTP ROM
— TOP VIEW —

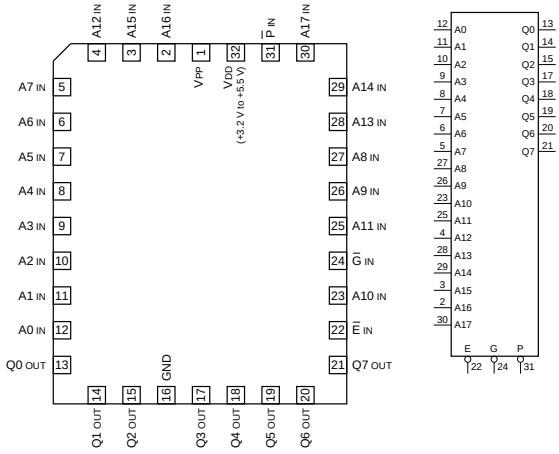

A0 - A17 ; ADDRESS INPUTS
Q0 - Q7 ; DATA OUTPUTS
E ; CHIP ENABLE INPUT
G ; OUTPUT ENABLE INPUT
P ; PROGRAM INPUT
VPP ; PROGRAM SUPPLY (12.75 V)

MODE	E	G	E	E	E	Q0 -Q7
READ	0	0	X	X	X	DATA OUT
OUTPUT DISABLE	0	1	X	X	X	HI-Z
PROGRAM	0	1	⎍	X	VPP	DATA IN
VERIFY	0	0	1	X	VPP	DATA OUT
PROGRAM INHIBIT	1	X	X	X	VPP	HI-Z
STANDBY	1	X	X	X	X	HI-Z
ELECTRONIC SIGNATURE	0	0	1	VID	VDD	CODES

0 ; INPUT LOW VOLTAGE
1 ; INPUT HIGH VOLTAGE
X ; DON'T CARE
VID ; 12 V ± 0.5 V
HI-Z ; HIGH IMPEDANCE

HD6475328F10 (HITACHI)

C-MOS 16-BIT MICROPROCESSOR

— TOP VIEW —

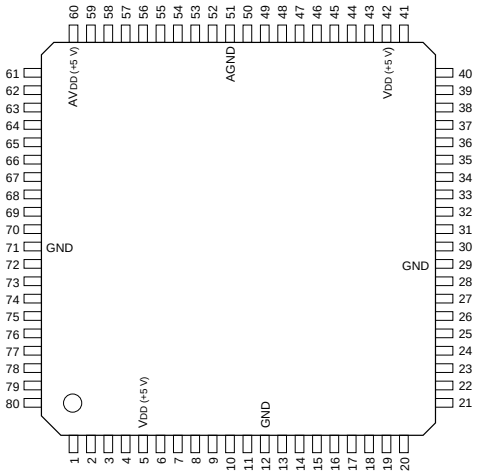

INPUT

AN0-AN7	; ANALOG INPUT
BREQ	; BUS REQUEST
EXTAL	; CONNECTED TO CRYSTAL OSCILLATOR.
ETCI1-FTCI3	; FRT COUNTER CLOCK INPUT (CHANNEL 1 TO 3)
FTI1-FTI3	; FRT INPUT CAPTURE INPUT (CHANNEL 1 TO 3)
IRQ0, 1	; INTERRUPTION REQUEST 0 AND 1
MD0-MD2	; MODE SETTING
NMI	; NON MASKABLE INTERRUPTION
P80-P87	; PORT 8
RES	; RESET
RXD	; RECEIVE DATA
STBY	; STANDBY
TMCI	; 8-BIT TIMER CLOCK INPUT
TMRI	; 8-BIT TIMER COUNTER RESET INPUT
WAIT	; WAIT
XTAL	; CONNECTED TO CRYSTAL OSCILLATOR.

OUTPUT

A0-A19	; ADDRESS BUS
AS	; ADDRESS STROBE
BACK	; BUS REQUEST ACKNOWLEDGE
DS	; DATA STROBE
E	; ENABLE CLOCK
FTOA1-FTOA3	; FRT OUTPUT COMPARE A OUTPUT (CHANNEL 1 TO 3)
FTOB1-FTOB3	; FRT OUTPUT COMPARE B OUTPUT (CHANNEL 1 TO 3)
PW1-PW3	; PWM TIMER OUTPUT (CHANNEL 1 TO 3)
R/W	; READ/WRITE
RD	; READ
TMO	; 8-BIT TIMER OUTPUT
TXD	; SEND DATA
WR	; WRITE
ø	; SYSTEM CLOCK

INPUT/OUTPUT

D0-D7	; DATA BUS
P10-P17	; PORT 1
P20-P24	; PORT 2
P30-P37	; PORT 3
P40-P47	; PORT 4
P50-P57	; PORT 5
P60-P63	; PORT 6
P70-P77	; PORT 7
P90-P97	; PORT 9
SCK	; SERIAL CLOCK INPUT/OUTPUT

PIN No.	I/O	SIGNAL	PIN No.	I/O	SIGNAL	PIN No.	I/O	SIGNAL
1	I/O	P21/R/$\overline{W}$	28	I/O	P47/A7	55	I/O	P83/AN3
2	I/O	P22/$\overline{DS}$	29	—	GND	56	I/O	P84/AN4
3	I/O	P23/$\overline{RD}$	30	I/O	P50/A8	57	I/O	P85/AN5
4	I/O	P24/$\overline{WR}$	31	I/O	P51/A9	58	I/O	P86/AN6
5	—	VDD	32	I/O	P52/A10	59	I/O	P87/AN7
6	I	MD0	33	I/O	P53/A11	60	—	AVDD
7	I	MD1	34	I/O	P54/A12	61	I/O	P90/FTOA2
8	I	MD2	35	I/O	P55/A13	62	I/O	P91/FTOA3
9	I	$\overline{STBY}$	36	I/O	P56/A14	63	I/O	P92/PW1
10	I	$\overline{RES}$	37	I/O	P57/A15	64	I/O	P93/PW2
11	I	NMI	38	I/O	P60/A16	65	I/O	P94/PW3
12	—	GND	39	I/O	P61/A17	66	I/O	P95/TXD
13	I/O	P30/D0	40	I/O	P62/A18	67	I/O	P96/RXD
14	I/O	P31/D1	41	I/O	P63/A19	68	I/O	P97/SCK
15	I/O	P32/D2	42	—	VDD	69	I	EXTAL
16	I/O	P33/D3	43	I/O	P70/TMCI	70	I	XTAL
17	I/O	P34/D4	44	I/O	P71/FTI1	71	—	VSS
18	I/O	P35/D5	45	I/O	P72/FTI2	72	I/O	P10/ø
19	I/O	P36/D6	46	I/O	P73/FTI3/TMRI	73	I/O	P11/E
20	I/O	P37/D7	47	I/O	P74/FTOB1/FTCI1	74	I/O	P12/$\overline{BACK}$
21	I/O	P40/A0	48	I/O	P75/FTOB2/FTCI2	75	I/O	P12/$\overline{BREQ}$
22	I/O	P41/A1	49	I/O	P76/FTOB3/FTCI3	76	I/O	P12/$\overline{WAIT}$
23	I/O	P42/A2	50	O	P77/FTOA1	77	I/O	P12/$\overline{IRQ0}$
24	I/O	P43/A3	51	—	AGND	78	I/O	P12/$\overline{IRQ1}$
25	I/O	P44/A4	52	I/O	P80/AN0	79	I/O	P12/TMO
26	I/O	P45/A5	53	I/O	P81/AN1	80	I/O	P12/$\overline{AS}$
27	I/O	P46/A6	54	I/O	P82/AN2			

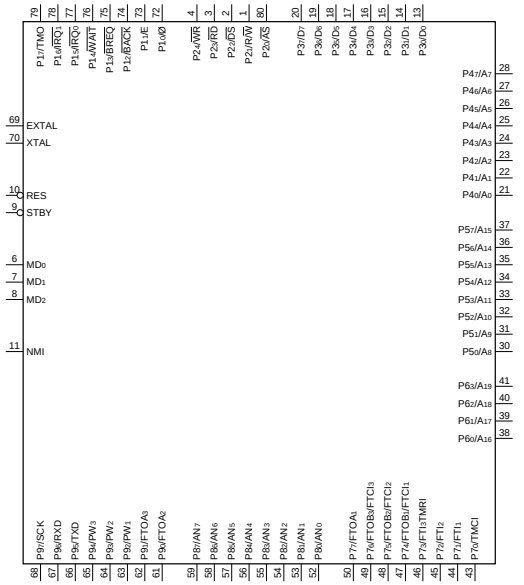

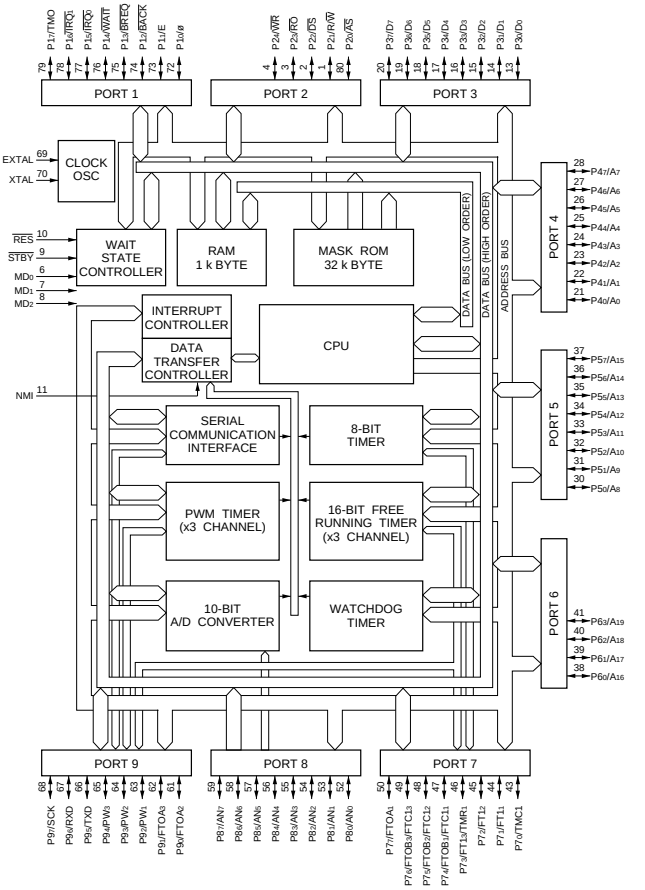

http://getMANUAL.com

M5207L01 (MITSUBISHI)

LINEAR CONTROL DUAL VOLTAGE CONTROLLED AMP
-SIDE VIEW-

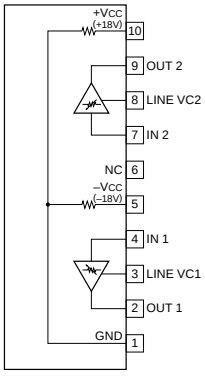

M62021FP (MITSUBISHI)FLAT PACKAGE

SELECTION SW BUILT-IN SYSTEM RESET
— TOP VIEW —

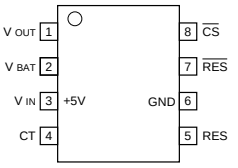

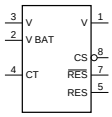

CS ; CHIP SELECT OUTPUT
CT ; DELAY CAPACITY INPUT
RES ; RESET OUTPUT
VBAT ; VIDEO SIGNAL BACKUP INPUT
VIN ; VIDEO SIGNAL INPUT
VOUT ; VIDEO SIGNAL OUTPUT

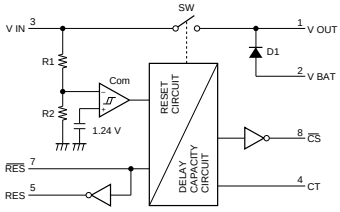

M62352GP (MITSUBISHI)FLAT PACKAGE
M62352GP-75ED

C-MOS 8-BITx12 CHANNEL D/A CONVERTER
(WITH BUFFER OPERATIONAL AMPLIFIER)
— TOP VIEW —

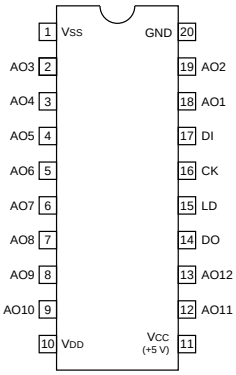

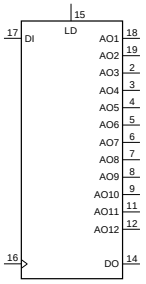

AO1-AO12 ; 8-BIT D/A OUTPUTS
CK ; CLOCK INPUT
DI ; SERIAL DATA INPUT
DO ; DATA OUTPUT

NOTE:
3.5 V < VDD < Vcc
–3.5 V < Vss < Vcc

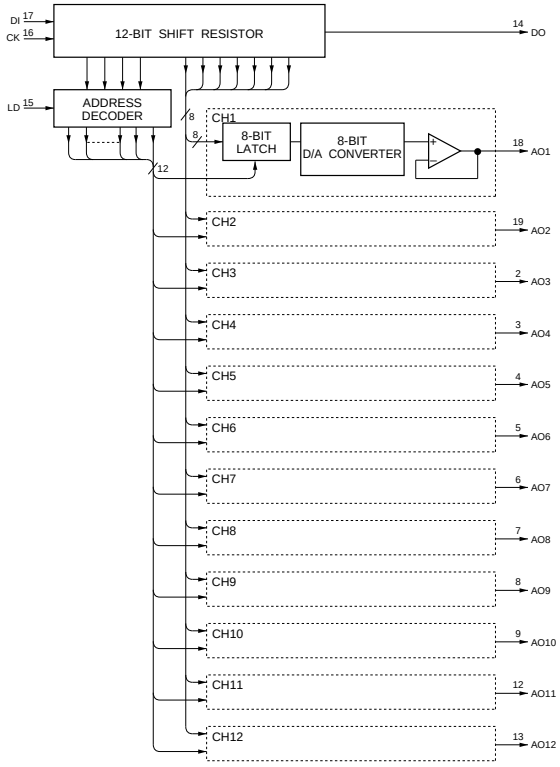

MAX202CSE (MAXIM)
MAX202CSE-TE2

RS-232 TRANSMITTER/RECEIVER
— TOP VIEW —

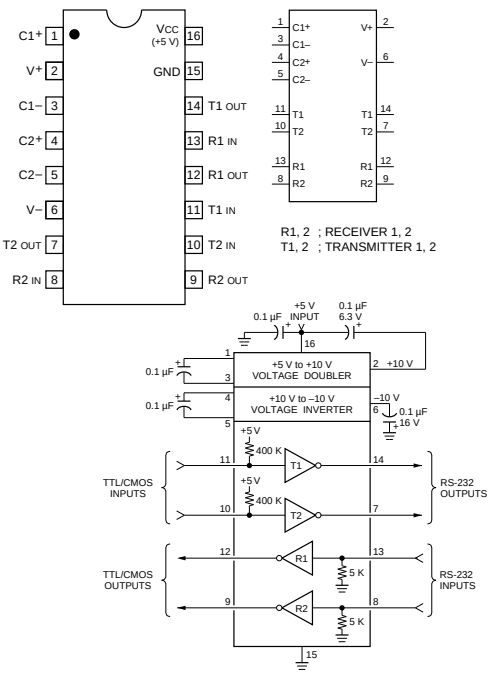

MB88346BPFV (FUJITSU)FLAT PACKAGE(SMALL)
MB88346BPFV-EF

C-MOS 8-BIT D/A CONVERTER
-TOP VIEW-

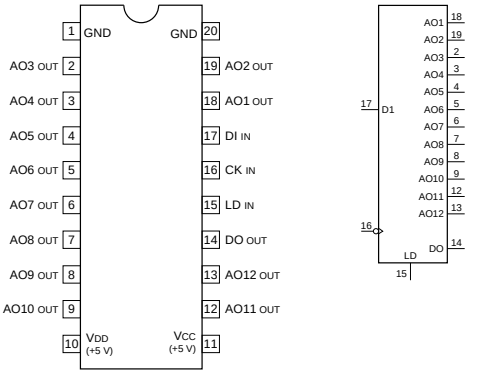

AO1 - AO12 ; 8-BIT D/A OUTPUTS
CK ; CLOCK INPUT
DI ; SERIAL DATA INPUT
DO ; DATA OUTPUT
LD ; DATA LOAD CONTROL INPUT (H ; LOAD)

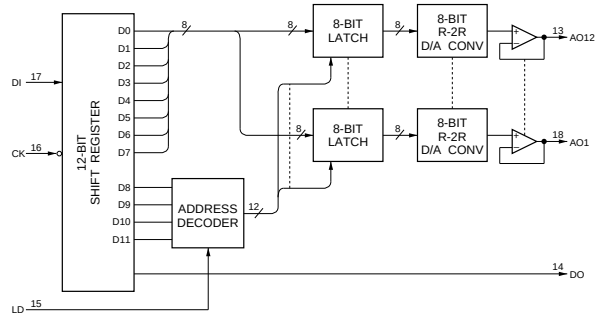

MB88351PFV (FUJITSU)FLAT PACKAGE
MB88351PFV-ER

C-MOS 12-BIT D / A CONVERTER WITH OPERATIONAL AMPLIFIER
-TOP VIEW-

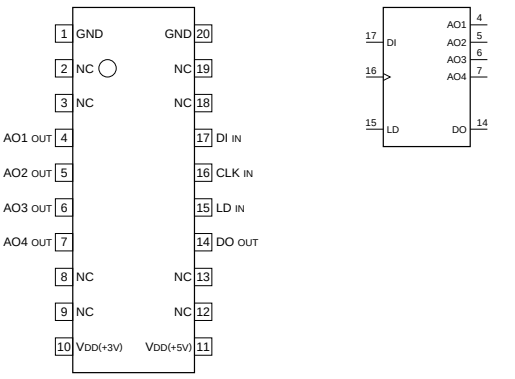

INPUT
CLK ; CHIFT CLOCK
DI ; SERIAL DATA
LD ; DECODER AND D/A REGISTER TO LOAD

OUTPUT
AO1 - AO4 ; ANALOG DATA
DO ; MBS BIT DATA IN 15-BIT SHIFT REGISTER

D12	D13	D14	ADDRESS SELECT
0	0	0	DON'T CARE
0	0	1	AO1 SELECT
0	1	0	AO2 SELECT
0	1	1	AO3 SELECT
1	0	0	AO4 SELECT
1	0	1	DON'T CARE
1	1	0	DON'T CARE
1	1	1	DON'T CARE

0 ; LOW LEVEL
1 ; HIGH LEVEL

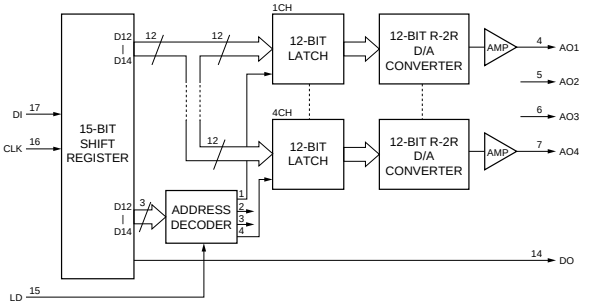

MC1495M (MOTOROLA)FLAT PACKAGE

FOUR-QUADRANT MULTIPLIER
-TOP VIEW-

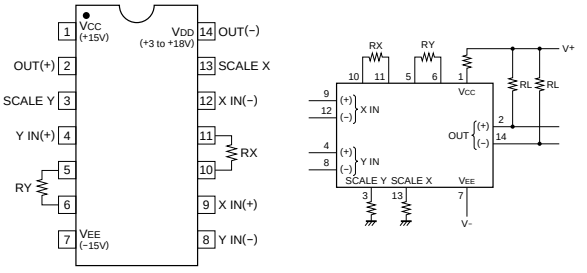

MC74ACT08M (MOTOROLA)FLAT PACKAGE
TC74ACT08F (TOSHIBA)FLAT PACKAGE

C-MOS QUAD 2-INPUT AND GATE
- TOP VIEW -

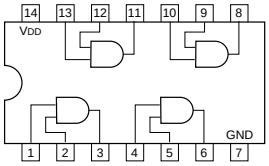

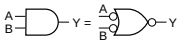

A	B	Y
0	0	0
0	1	0
1	0	0
1	1	1

0 ; LOW LEVEL
1 ; HIGH LEVEL

NOTE :

TYPE	VDD
AC	+2 to +5.5V
TC40H	+2 to +8V
ACT/HCT	+5V
OTHER TYPES	+2 to +6V

MC74ACT86M (MOTOROLA)FLAT PACKAGE
TC74AC86FS(EL) (TOSHIBA)FLAT PACKAGE

C-MOS QUAD EXCLUSIVE OR GATES
-TOP VIEW-

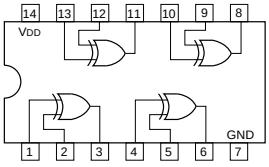

A	B	Y
0	0	0
0	1	1
1	0	1
1	1	0

0 ; LOW LEVEL
1 ; HIGH LEVEL

NOTE :

TYPE	VDD
74AC/74VHC	+2V to +5.5V
74ACT/74HCT	+4.5 to +5.5V
OTHER TYPES	+2V to +6V

MC74HC4052F (MOTOROLA)FLAT PACKAGE
MC74HC4052FEL

C-MOS DUAL 4-CHANNEL ANALOG MULTIPLEXER/DEMULTIPLEXER
-TOP VIEW-

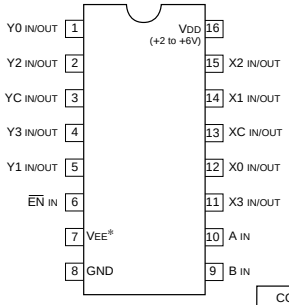

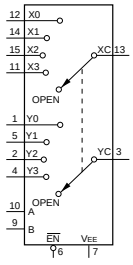

VEE*: VDD–VEE=+3 to +12V

CONTROL INPUTS			"ON" CHANNEL
$\overline{EN}$	B	A	
0	0	0	0
0	0	1	1
0	1	0	2
0	1	1	3
1	X	X	OPEN

0 ; LOW LEVEL
1 ; HIGH LEVEL
X ; DON'T CARE

MC74HC4046AF (MOTOROLA)FLAT PACKAGE
MC74HC4046AFEL

C-MOS PHASE LOCKED LOOP
-TOP VIEW-

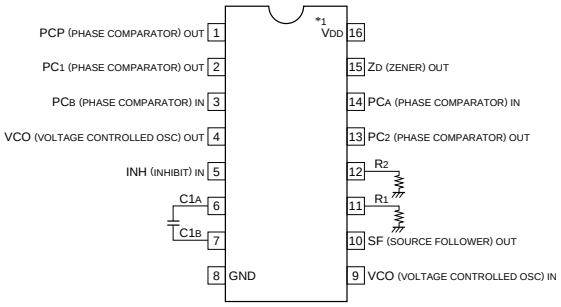

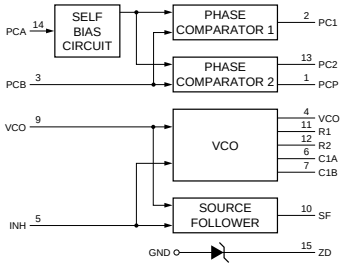

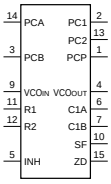

*1

TYPE	VDD
CD4046BE HD14046BP MC14046BCP MC14046BF TC4046BP	+3 to +8V
CD74HC4046AM MC74HC4046AF MC74HC4046AN	+2 to +6V

MC74HC4051F (MOTOROLA)FLAT PACKAGE
MC74HC4051FEL

C-MOS 8-CHANNEL ANALOG MULTIPLEXER/DEMULTIPLEXER
—TOP VIEW—

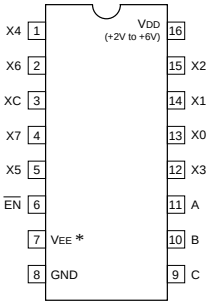

VEE *; VDD – VEE=+3V to +12V

CONTROL INPUTS				SELECTED CHANNEL
EN	SELECT			
	C	B	A	
0	0	0	0	X0
0	0	0	1	X1
0	0	1	0	X2
0	0	1	1	X3
0	1	0	0	X4
0	1	0	1	X5
0	1	1	0	X6
0	1	1	1	X7
1	X	X	X	OPEN

0 ; LOW LEVEL
1 ; HIGH LEVEL
X ; DON'T CARE

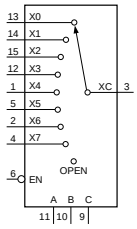

X0-X7 ; ANALOG INPUTS/OUTPUTS
XC ; COMMON INPUT/OUTPUT
A, B, C ; CHANNEL SELECT INPUT
$\overline{EN}$; ENABLE INPUT

MC74HC75F (MOTOROLA)FLAT PACKAGE

C-MOS 4-BIT D-TYPE LATCH
-TOP VIEW-

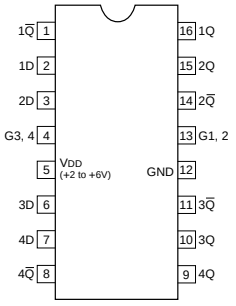

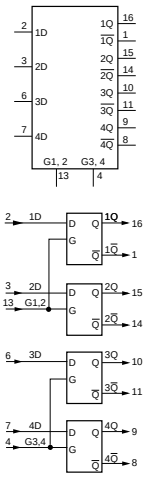

INPUTS		OUTPUTS		FUNCTION
D	G	Q	Q̄	
0	1	0	1	—
1	1	1	0	—
×	0	Qn	$\overline{Qn}$	LATCH

0 ; LOW LEVEL
1 ; HIGH LEVEL
× ; DON'T CARE

NJM3414AM-TE2 (JRC)FLAT PACKAGE

DUAL OPERATIONAL AMPLIFIER
— TOP VIEW —

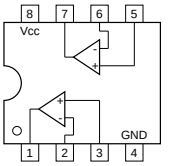

NOTE:

TYPE	Vcc
TA75358P	+12V
NJM3414M RC3414M	+15V
M5223FP	+36V

NJM4558V-TE2 (JRC)

DUAL OPERATIONAL AMPLIFIER
— TOP VIEW —

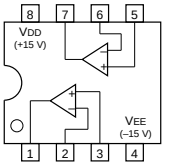

NJM062V(TE2) (JRC)
TL062CPW (TI)FLAT PACKAGE
TL062CPW-E05

OPERATIONAL AMPLIFIER
(J FET INPUT)
—TOP VIEW—

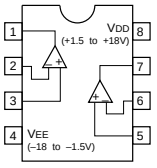

PC410 (SHARP)FLAT PACKAGE

OPIC-OUTPUT PHOTO COUPLER
—TOP VIEW—

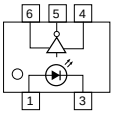

NJM1496V-TE2 (JRC)FLAT PACKAGE

BALANCED MODULATOR/DEMODULATOR
-TOP VIEW-

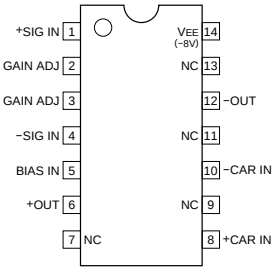

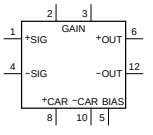

PCF8574T-T (PHILIPS)

C-MOS REMOTE 8-BIT I/O EXPANDER
— TOP VIEW —

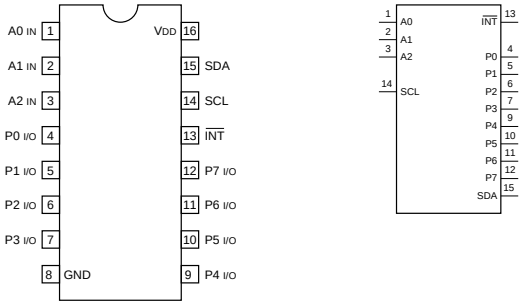

INPUT
A0 - A2 ; ADDRESS INPUTS
SCL ; SYSTEM CLOCK LINE

OUTPUT
$\overline{INT}$; INTERRUPT OUTPUT
SDA ; SERIAL DATA LINE

INPUT/OUTPUT
P0 - P7 ; 8-BITS QUASI-BIDIRECTIONAL I/O PORT

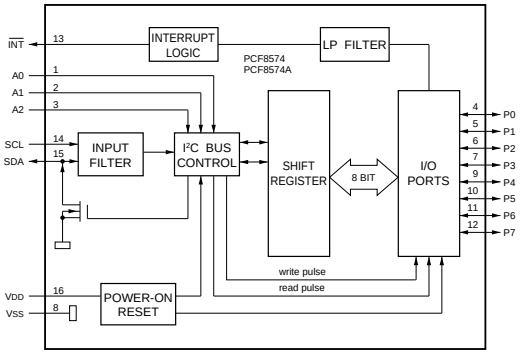

PCF8591T (PHILIPS)

C-MOS 8-BIT A/D AND D/A CONVERTER
-TOP VIEW-

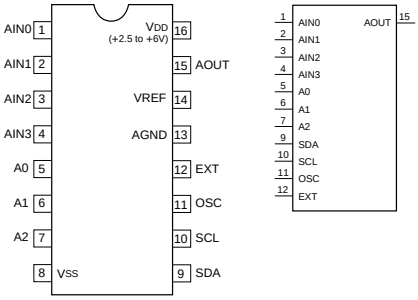

INPUT
A0-A2 ; HARDWARE ADDRESS
AIN0-AIN3 ; ANALOGUE INPUTS (A/D CONVERTER)
EXT ; EXTERNAL/INTERNAL SWITCH FOR OSCILLATOR INPUT
OSC ; OSCILLATOR INPUT/OUTPUT
SCL ; I²C BUS CLOCK INPUT/OUTPUT
SDA ; I²C BUS DATA INPUT/OUTPUT

OUTPUT
AOUT ; ANALOGUE OUTPUT(D/A CONVERTER)

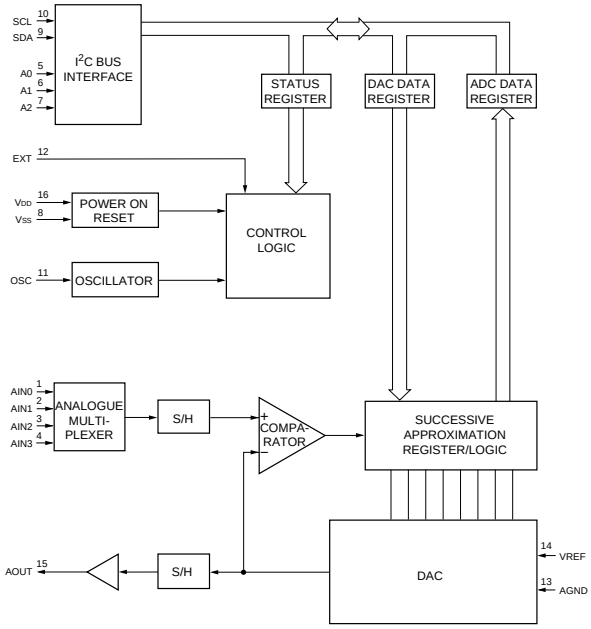

REF-03GSR (PMI)FLAT PACKAGE

REFERENCE/TEMPERATURE TRANSDUCER
— TOP VIEW —

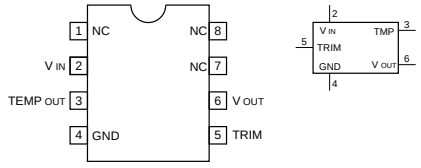

V IN ; INPUT VOLTAGE (+4.5 V to +33 V)
TEMP OUT ; TEMPERATURE TRANSDUCER VOLTAGE OUTPUT
TRIM IN ; OUTPUT SIGNAL TRIMMING
V OUT ; OUTPUT VOLTAGE (+2.5 V)

RTC-4553B (EPSON)

C-MOS REAL TIME CLOCK

— TOP VIEW —

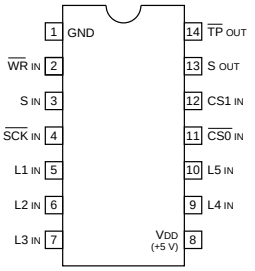

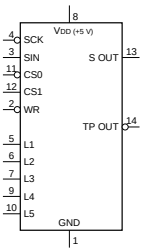

INPUT

CS0	; CHIP SELECT (L: ACCESS ENABLE, H: SOUT HIGH Z)
CS1	; POWER DOWN DETECTION
L1-L5	; TEST IN
SCK	; SERIAL SYNC SIGNAL
SIN	; SERIAL ADDRESS/DATA
WR	; WRITING SELECT (L: WRITING, H: READING)

OUTPUT

SOUT	; SERIAL ADDRESS/DATA
TPOUT	; REFERENCE SIGNAL

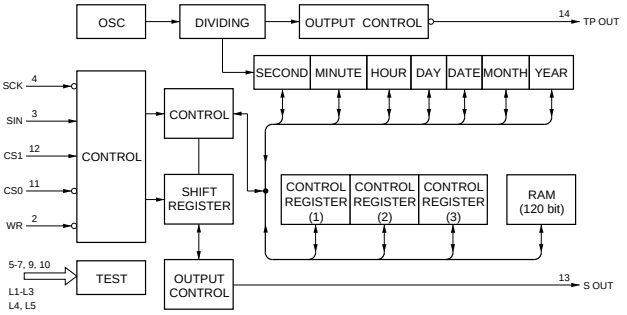

SN74HC00APW-E20 (TI)FLAT PACKAGE
SN74HC00APW-E05

C-MOS QUAD 2-INPUT NAND GATES

—TOP VIEW—

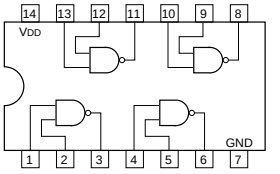

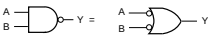

$Y = \overline{A \cdot B} = \overline{A} + \overline{B}$

A	B	Y
0	0	1
0	1	1
1	0	1
1	1	0

0 ; LOW LEVEL
1 ; HIGH LEVEL

NOTE:

TYPE	VDD
TC74AC00 TYPE TC74VHC00	+2 to +5.5V
MC74HCT00N	+5V
74ACT00 TYPE	+4.5 to +5.5V
OTHER TYPES	+2 to +6V

SN74HC04APW-E20 (TI)FLAT PACKAGE
SN74HC04APW-E05

C-MOS HEX INVERTERS

-TOP VIEW-

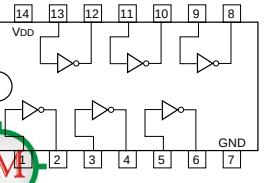

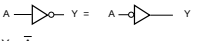

$Y = \overline{A}$

A	Y
0	1
1	0

0 ; LOW LEVEL
1 ; HIGH LEVEL

NOTE:

TYPE	VDD
74HCT04 TYPE	+5V
TC74AC04 TYPE TC74VHC04 TYPE	+2 to +5.5V
74ACT04 TYPE	+4.5 to +5.5V
OTHER TYPES	+2 to +6V

SC7S32F (MOTOROLA)CHIP PACKAGE
TC7S32FU(TE85R) (TOSHIBA)FLAT PACKAGE
TC7SH32FU-TE85R (TOSHIBA)FLAT PACKAGE
TC7S32F(TE85R)

C-MOS 2-INPUT OR GATE

-TOP VIEW-

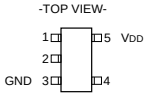

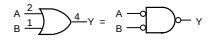

$Y = A + B = \overline{\overline{A} \cdot \overline{B}}$

A	B	Y
0	0	0
0	1	1
1	0	1
1	1	1

0 ; LOW LEVEL
1 ; HIGH LEVEL

TYPE	VDD
7S32F 7S32FU	+2 to +6V
4S71F	+3 to +18V
7SH32FU	+2 to +5.5V

SN74HC138APW-E05 (TI)FLAT PACKAGE

C-MOS 3-TO-8 LINE DECODER / DEMULTIPLEXER

—TOP VIEW—

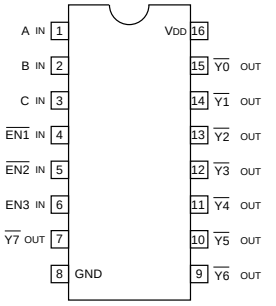

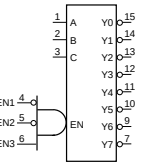

INPUTS				OUTPUTS							
EN	C	B	A	Y7	Y6	Y5	Y4	Y3	Y2	Y1	Y0
0	X	X	X	1	1	1	1	1	1	1	1
1	0	0	0	1	1	1	1	1	1	1	0
1	0	0	1	1	1	1	1	1	1	0	1
1	0	1	0	1	1	1	1	1	0	1	1
1	0	1	1	1	1	1	1	0	1	1	1
1	1	0	0	1	1	1	0	1	1	1	1
1	1	0	1	1	1	0	1	1	1	1	1
1	1	1	0	1	0	1	1	1	1	1	1
1	1	1	1	0	1	1	1	1	1	1	1

NOTE:

TYPE	VDD
74HCT138 TYPE	+5V
74ACT138 TYPE	+4.5 to +5.5V
TC74AC138 TYPE TC74VHC138	+2 to +5.5V
OTHER TYPES	+2 to +6V

$EN = \overline{EN1} \cdot \overline{EN2} \cdot EN3$

0 ; LOW LEVEL
1 ; HIGH LEVEL
X ; DON'T CARE

SN74HC164ANS (TI)FLAT PACKAGE
SN74HC164ANS-E05

C-MOS 8-BIT SERIAL-IN/PARALLEL-OUT SHIFT REGISTER
—TOP VIEW—

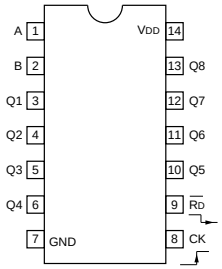

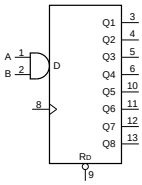

INPUTS				OUTPUTS			
RD	CK	A	B	Q1	Q2	---	Q8
0	X	X	X	0	0	0	0
1	0	X	X	Q1o	Q2o	---	Q8o
1	↑	1	1	1	Q1n	---	Q7n
1	↑	0	X	0	Q1n	---	Q7n
1	↑	X	0	0	Q1n	---	Q7n

0 ; LOW LEVEL
1 ; HIGH LEVEL
X ; DON'T CARE

NOTE:

TYPE	VDD
AC/VHC	+2 to +5.5 V
HC	+2 to +6 V
HCT	+5 V

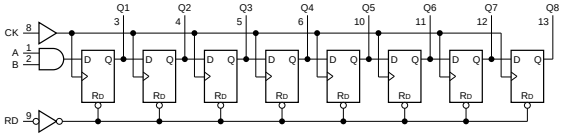

SN74HC373ANS (TI)FLAT PACKAGE
SN74HC373ANS-E05

C-MOS 3-STATE OUTPUT OCTAL LATCHES
-TOP VIEW-

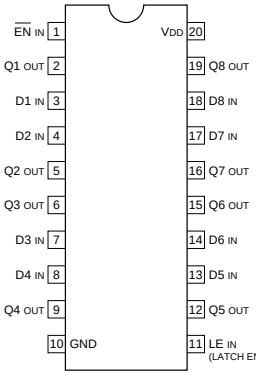

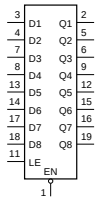

INPUTS			OUT
EN	D	LE	Q
0	1	1	1
0	0	1	0
0	×	0	Qo
1	×	×	HI-Z

HI-Z ; HIGH IMPEDANCE
0 ; LOW LEVEL
1 ; HIGH LEVEL
× ; DON'T CARE

NOTE;

TYPE	VDD
AC HC	+2 to +6V
ACT HCT	+5V

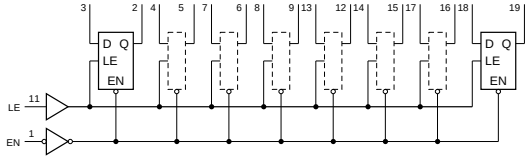

SN74HC32APW-E05 (TI)FLAT PACKAGE

C-MOS QUAD 2-INPUT OR GATES
—TOP VIEW—

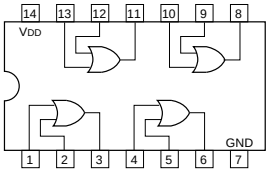

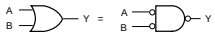

$Y = A + B = \overline{\overline{A} \cdot \overline{B}}$

A	B	Y
0	0	0
0	1	1
1	0	1
1	1	1

0 ; LOW LEVEL
1 ; HIGH LEVEL

NOTE:

TYPE	VDD
AC/VHC	+2 to +5.5V
HC	+2 to +6V

SN75158PS (TI)
SN75158PS-E05

DUAL DIFFERENTIAL LINE DRIVE
— TOP VIEW —

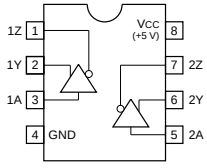

SN74HCT541APW-E05 (TI)FLAT PACKAGE

C-MOS BUFFERS AND LINE DRIVERS WITH 3-STATE OUTPUTS
- TOP VIEW -

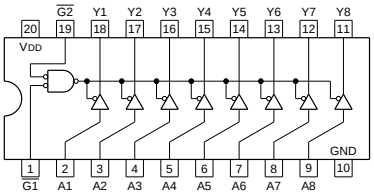

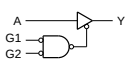

G1	G2	A	Y
0	0	0	1
0	0	1	0
1	X	X	HI-Z
X	1	X	HI-Z

0 ; LOW LEVEL
1 ; HIGH LEVEL
X ; DON'T CARE
HI-Z ; HIGH IMPEDANCE

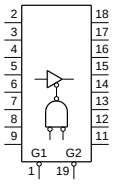

NOTE :

TYPE	VDD
TC74AC/TC74VHC	+2 to +5.5V
ABT/ACT/BCT/HCT/VHCT	+5V
OTHER TYPES	+2 to +6V

SN75179BPS (TI)FLAT PACKAGE
SN75179BPS-E05

DIFFERENTIAL BUS DRIVER/RECEIVER
-TOP VIEW-

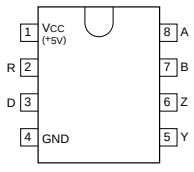

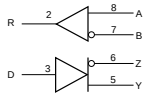

-DRIVER-

INPUT	OUTPUTS	
D	Y	Z
H	H	L
L	L	H

-RECEIVER-

DIFFERENTIAL INPUTS A–B	OUTPUTS R
VID ≧ 0.2V	H
–0.2V < VID < 0.2V	?
VID ≦ –0.2V	L

H = HIGH LEVEL L = LOW LEVEL ? = INDETERMINATE

SPT7860SCT (SIGNAL PROCESSING TECHNOLOGIES)

C-MOS 10-BIT A/D CONVERTER

– TOP VIEW –

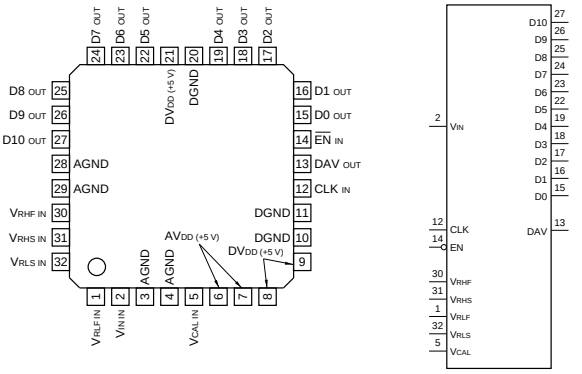

INPUT

CLK	; CLOCK f_{CLK} = fs
$\overline{EN}$	; OUTPUT ENABLE
V_{CAL}	; CALIBRATION REFERENCE
V_{IN}	; ANALOG VOLTAGE
V_{RHF}	; REFERENCE HIGH FORCE
V_{RHS}	; REFERENCE HIGH SENCE
V_{RLF}	; REFERENCE LOW FORCE
V_{RLS}	; REFERENCE LOW SENCE

OUTPUT

D0 - D9	; DIGITAL DATA
D10	; OVERRANGE
DAV	; DATA VALID

OTHER

AGND	; ANALOG GROUND
AV_{DD}	; ANALOG POWER SUPPLY
DGND	; DIGITAL GROUND
DV_{DD}	; DIGITAL POWER SUPPLY

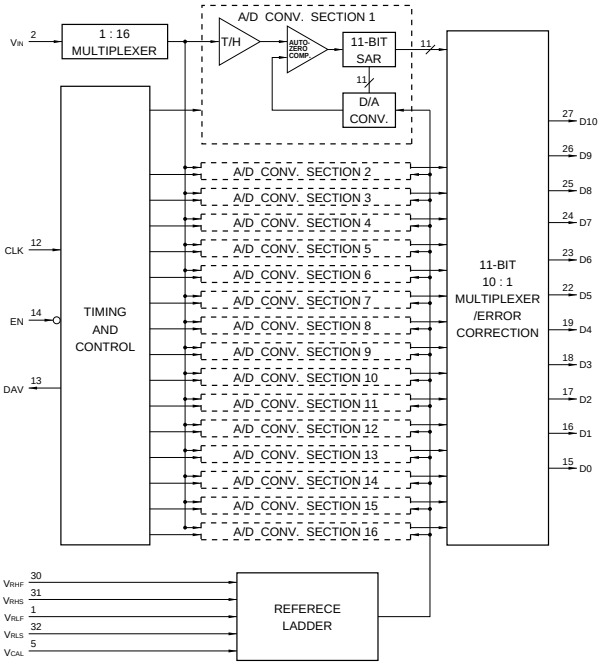

TC4066BFS-EL (TOSHIBA)

C-MOS QUAD BILATERAL ANALOG SWITCH

-TOP VIEW-

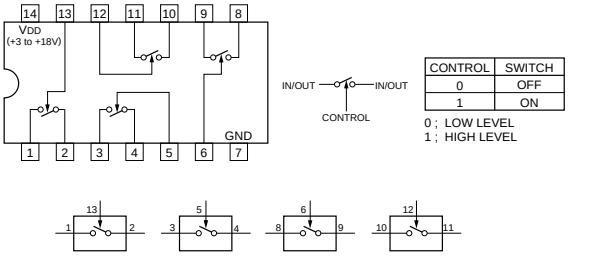

CONTROL	SWITCH
0	OFF
1	ON

0 ; LOW LEVEL
1 ; HIGH LEVEL

TC4W53F (TOSHIBA)CHIP PACKAGE(5.0 X 3.1)
TC4W53FU (TOSHIBA)CHIP PACKAGE
TC4W53F (TE12R)
TC4W53FU (TE12R)

C-MOS 2-CHANNEL MULTIPLEXER / DEMULTIPLEXER

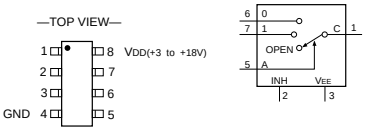

CONT.INPUT		ON CHANNEL
INH	A	
0	0	0
0	1	1
1	X	OPEN

0 ; LOW LEVEL
1 ; HIGH LEVEL
X ; DON'T CARE

TC4W66FU(TE12R) (TOSHIBA)FLAT PACKAGE

C-MOS DUAL BILATERAL SWITCH

-TOP VIEW-

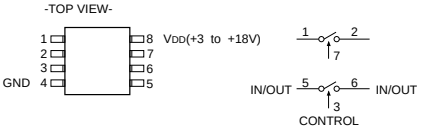

CONTROL	SWITCH
0	OFF
1	ON

0 : LOW LEVEL
1 : HIGH LEVEL

TC74AC74FS (TOSHIBA)FLAT PACKAGE(SMALL)
TC74AC74FS(EL)

C-MOS DUAL D-TYPE FLIP-FLOPS WITH DIRECT SET/RESET
—TOP VIEW—

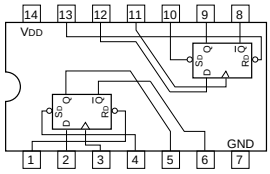

INPUTS				OUTPUTS	
$\overline{SD}$	$\overline{RD}$	CK	D	Qn+1	$\overline{Qn+1}$
0	1	X	X	1	0
1	0	X	X	0	1
0	0	X	X	1	1
1	1	↑	1	1	0
1	1	↑	0	0	1
1	1	0	X	Qn	$\overline{Qn}$

0 ; LOW LEVEL
1 ; HIGH LEVEL
X ; DON'T CARE

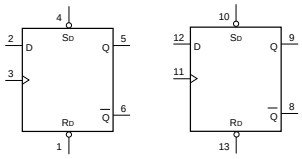

NOTE:

TYPE	VDD
HCT/ACT	+5V
TC74AC/VHC	+2 to +5.5V
OTHERS	+2 to +6V

TC74ACT374FS(EL) (TOSHIBA)FLAT PACKAGE

C-MOS 3-STATE OCTAL D-TYPE FLIP-FLOP
-TOP VIEW-

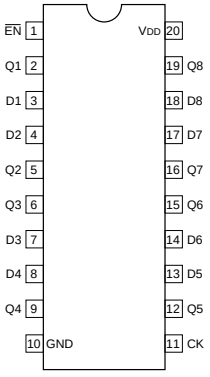

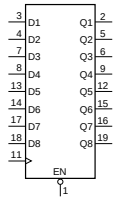

INPUTS			OUT
EN	D	CK	0
0	1	↑	1
0	0	↑	0
0	×	0	Q0
1	×	×	HI-Z

0 ; LOW LEVEL
1 ; HIGH LEVEL
× ; DON'T CARE
HI-Z ; HIGH IMPEDANCE

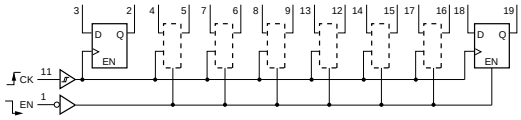

NOTE :

TYPE	VDD
74AC/74HC	+2 to +6V
74ACT/74BCT/74FCT /74HCT	+5V
74VHC	+2 to +5.5V

TC74HC4053AFS (TOSHIBA)FLAT PACKAGE
TC74HC4053AFS-EL

C-MOS TRIPLE 2-CHANNEL ANALOG MULTIPLEXER/DEMULTIPLEXER
-TOP VIEW-

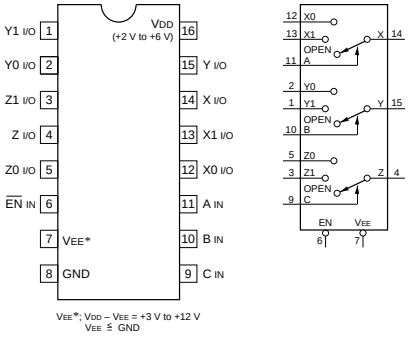

VEE*; VDD – VEE = +3 V to +12 V
VEE ≦ GND

CONTROL INPUTS				ON CHANNEL		
EN	SELECT					
	C	B	A			
0	0	0	0	Z0	Y0	X0
0	0	0	1	Z0	Y0	X1
0	0	1	0	Z0	Y1	X0
0	0	1	1	Z0	Y1	X1
0	1	0	0	Z1	Y0	X0
0	1	0	1	Z1	Y0	X1
0	1	1	0	Z1	Y1	X0
0	1	1	1	Z1	Y1	X1
1	×	×	×	OPEN		

0 ; LOW LEVEL
1 ; HIGH LEVEL
× ; DON'T CARE

TC74HC4538AFS-EL (TOSHIBA)FLAT PACKAGE

C-MOS DUAL RETRIGGERABLE / NON-RETRIGGERABLE MONOSTABLE MULTIVIBRATOR
-TOP VIEW -

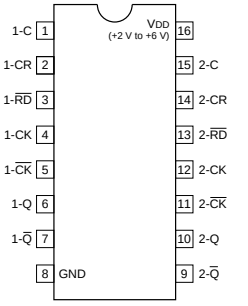

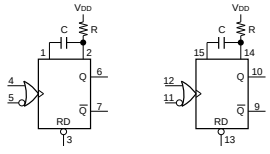

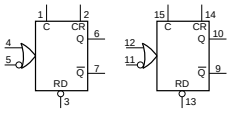

OUTPUT PULSE WIDTH = k · C · R

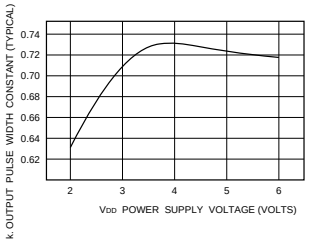

RETRIGGERABLE M. M. V

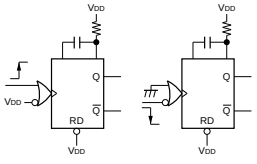

NON-RETRIGGERABLE M. M. V

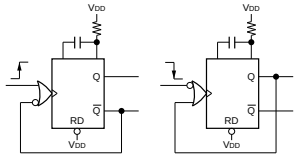

TC7S00F (TOSHIBA)CHIP PACKAGE
TC7S00FU(TE85R) (TOSHIBA)CHIP PACKAGE
TC7SH00FU-TE85R (TOSHIBA)FLAT PACKAGE
TC7S00F(TE85R)

C-MOS 2-INPUT NAND GATE

— TOP VIEW —

(SCALE 6/1)

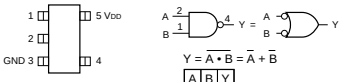

$Y = \overline{A \cdot B} = \overline{A} + \overline{B}$

A	B	Y
0	0	1
0	1	1
1	0	1
1	1	0

0 ; LOW LEVEL
1 ; HIGH LEVEL

TYPE	VDD
7S00F 7S00FU	+2 to +6 V
4S11F 4SU11F	+3 to +18 V
7SH00FU	+2 to +5.5 V

TC7S02FU (TOSHIBA)CHIP PACKAGE
TC7SH02FU (TOSHIBA)CHIP PACKAGE
TC7S02FU-TE85L
TC7SH02FU-TE85R

C-MOS 2-INPUT NOR GATE

—TOP VIEW—

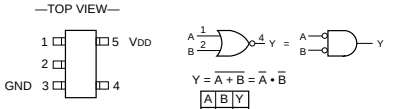

$Y = \overline{A + B} = \overline{A} \cdot \overline{B}$

A	B	Y
0	0	1
0	1	0
1	0	0
1	1	0

0 ; LOW LEVEL
1 ; HIGH LEVEL

TYPE	VDD
4S01F	+3 to +18V
7S02F 7S02FU 7SH02FU	+2 to +6V

TC7S04FU(TE85R) (TOSHIBA)FLAT PACKAGE
TC7SH04FU (TOSHIBA)CHIP PACKAGE
TC7SH04FU-TE85R

C-MOS INVERTER

—TOP VIEW—

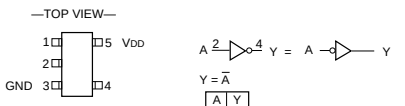

$Y = \overline{A}$

A	Y
0	1
1	0

0 ; LOW LEVEL
1 ; HIGH LEVEL

TYPE	VDD
7S04F 7SU04F 7SU04FU	+2 to +6V
4S69F 4SU69F	+3 to +18V
7SH04FU	+2 to +5.5V

TC7S08FU(TE85R) (TOSHIBA)FLAT PACKAGE
TC7SH08FU-TE85R (TOSHIBA)CHIP PACKAGE

C-MOS 2-INPUT AND GATE

(SCALE 6/1)
—TOP VIEW—

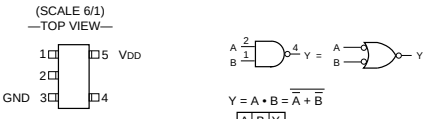

$Y = A \cdot B = \overline{\overline{A} + \overline{B}}$

A	B	Y
0	0	0
0	1	0
1	0	0
1	1	1

0 ; LOW LEVEL
1 ; HIGH LEVEL

TYPE	VDD
7S08F 7S08FU	+2 to +6V
4S81F 14S81F	+3 to +18V
7SH08FU	–2 to +5.5V

TC7S14F-TE85L (TOSHIBA)CHIP PACKAGE
TC7S14F(TE85R)

C-MOS SCHMITT INVERTER
-TOP VIEW-

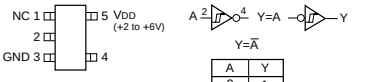

$Y = \overline{A}$

A	Y
0	1
1	0

0 ; LOW LEVEL
1 ; HIGH LEVEL

TC7S66FU (TOSHIBA)
TC7S66FU(TE85R)

C-MOS ANALOG SWITCH
—TOP VIEW—

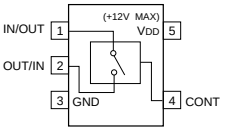

TC7S86FU (TOSHIBA)CHIP PACKAGE
TC7S86FU(TE85R)

C-MOS 2-INPUT EXCLUSIVE OR GATE

—TOP VIEW—

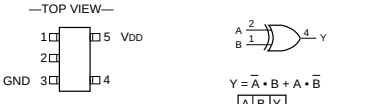

$Y = \overline{A} \cdot B + A \cdot \overline{B}$

A	B	Y
0	0	0
0	1	1
1	0	1
1	1	0

0 ; LOW LEVEL
1 ; HIGH LEVEL

TYPE	VDD
7S86FU 7S86F	+2 to +6V
4S30F	+3 to +18V

http://getMANUAL.com

TC7W02F (TOSHIBA)FLAT PACKAGE
TC7W02FU(TE12R)

C-MOS DUAL 2-INPUT NOR GATE
—TOP VIEW—

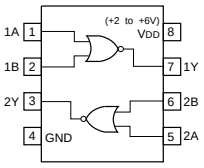

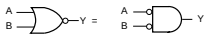

$Y = \overline{A + B} = \overline{A} \cdot \overline{B}$

A	B	Y
0	0	1
0	1	0
1	0	0
1	1	0

0 ; LOW LEVEL
1 ; HIGH LEVEL

TC7W04FU(TE12R) (TOSHIBA)FLAT PACKAGE

C-MOS HEX INVERTERS

—TOP VIEW—

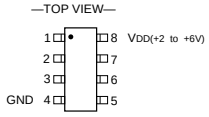

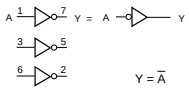

$Y = \overline{A}$

A	Y
0	1
1	0

0 ; LOW LEVEL
1 ; HIGH LEVEL

TC7W08FU (TOSHIBA)CHIP PACKAGE
TC7W08FU(TE12R)

C-MOS 2-INPUT AND GATE

—TOP VIEW—

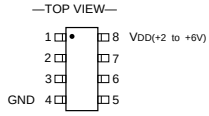

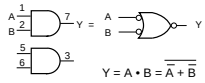

$Y = A \cdot B = \overline{\overline{A} + \overline{B}}$

A	B	Y
0	0	0
0	1	0
1	0	0
1	1	1

0 ; LOW LEVEL
1 ; HIGH LEVEL

TC7W74FU (TOSHIBA)CHIP PACKAGE
TC7W74FU(TE12R)

C-MOS D-TYPE FLIP-FLOPS WITH DIRECT SET / RESET
—TOP VIEW—

—TOP VIEW—

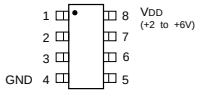

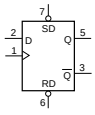

INPUTS				OUTPUTS	
$\overline{SD}$	$\overline{RD}$	CK	D	Qn+1	$\overline{Qn+1}$
0	1	X	X	1	0
1	0	X	X	0	1
0	0	X	X	1	1
1	1	↑	1	1	0
1	1	↑	0	0	1
1	1	↓	X	Qn	$\overline{Qn}$

0 ; LOW LEVEL
1 ; HIGH LEVEL
X ; DON'T CARE

TL064CPW (TI)
TL064CPW-E05

OPERATIONAL AMPLIFIER
(J FET INPUT)
—TOP VIEW—

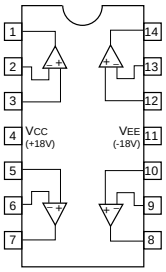

TL084CPW-E20 (TI)FLAT PACKAGE
TL084CPW-E05

OPERATIONAL AMPLIFIER
(J FET INPUT)
—TOP VIEW—

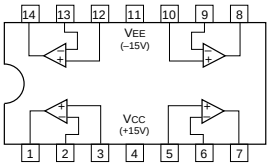

TL1451ACNS (TI)FLAT PACKAGE
TL1451ACPW-E05 (TI)
TL1451ACNS-E05

DUAL PWM POWER CONTROLLER
-TOP VIEW-

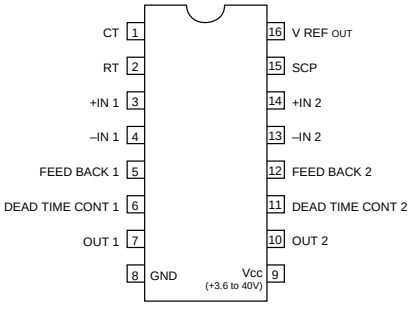

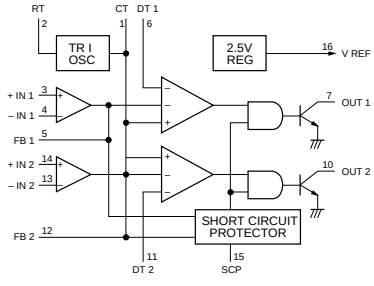

TL712CPS (TI)FLAT PACKAGE
TL712CPS-E05

HIGH SPEED COMPARATOR (TTL OUTPUT)
-TOP VIEW-

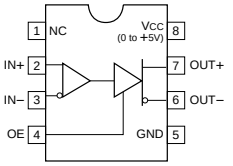

TL7705CPS-B (TI)FLAT PACKAGE
TL7705CPS-B-E05

POWER VOLTAGE SUPERVISOR
—TOP VIEW—

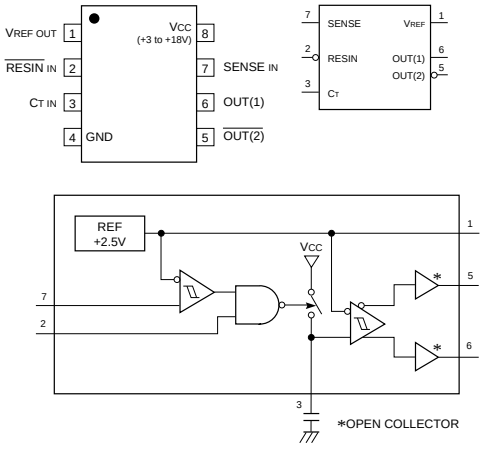

TLC272CPW-E05 (TI)FLAT PACKAGE
TLC27L2CPS (TI)FLAT PACKAGE
TLC27M2CPS (TI)FLAT PACKAGE
TLC27L2CPS-ELL2000
TLC27M2CPS-E05

OPERATIONAL AMPLIFIER
—TOP VIEW—

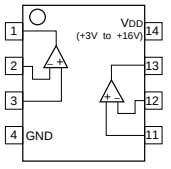

TLC27L4CPW (TI)
TLC27L4CPW-E05

C-MOS OPERATIONAL AMPLIFIER
—TOP VIEW—

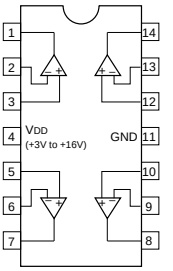

TLC339CPW-E05 (TI)FLAT PACKAGE

QUAD COMPARATOR
-TOP VIEW-

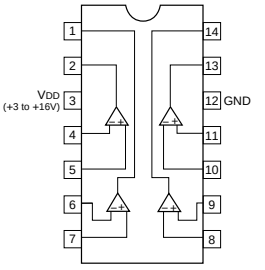

TLC393CPS (TI)FLAT PACKAGE
TLC393CPW-E05 (TI)FLAT PACKAGE
TLC393CPS-E05

C-MOS LOW VOLTAGE COMPARATOR
-TOP VIEW-

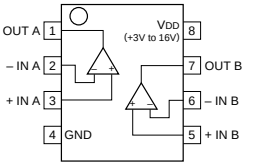

UPC1093T (NEC)
UPC1093T-E1

REGULATOR (VARIABLE VOLTAGE SHUNT)
-TOP VIEW-

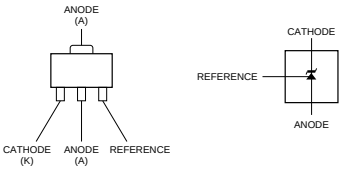

UPC814G2 (NEC)FLAT PACKAGE

TTL-DUAL OPERATIONAL AMPLIFIER
-TOP VIEW-

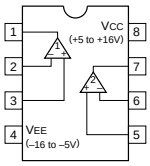

UPD42102G-5-E2 (NEC)FLAT PACKAGE

C-MOS 9K (1135 x 8)-BIT FIFO MEMORY
—TOP VIEW—

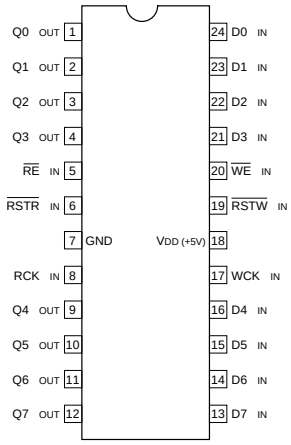

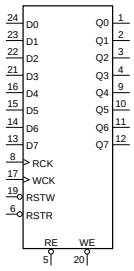

D 0 – D7 ; DATA INPUTS
Q 0 – Q7 ; DATA OUTPUTS
WCK ; WRITE CLOCK INPUT
RCK ; READ CLOCK INPUT
WE ; WRITE ENABLE INPUT
RE ; READ ENABLE INPUT
RSTW ; RESET WRITE INPUT
RSTR ; RESET READ INPUT

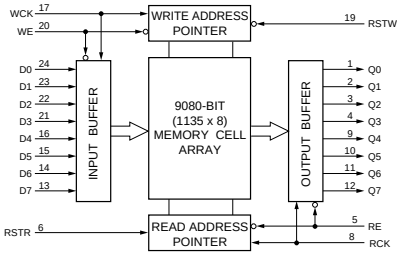

UPD4702G (NEC)

C-MOS INCREMENTAL ENCODER 8-BIT UP DOWN COUNTER
—TOP VIEW—

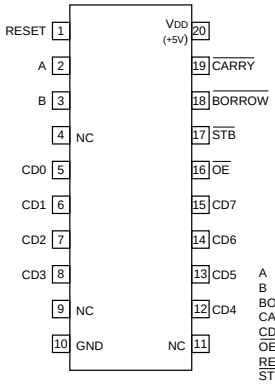

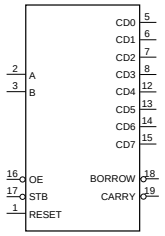

A ; INCREMENTAL SIGNAL (PHASE A) INPUT
B ; INCREMENTAL SIGNAL (PHASE B) INPUT
BORROW ; BORROW PULSE OUTPUT
CARRY ; CARRY PULSE OUTPUT
CD0-7 ; COUNT DATA OUTPUT
OE ; OUTPUT CONTROL SIGNAL INPUT
RESET ; COUNTER RESET INPUT
STB ; LATCH STROBE SIGNAL INPUT

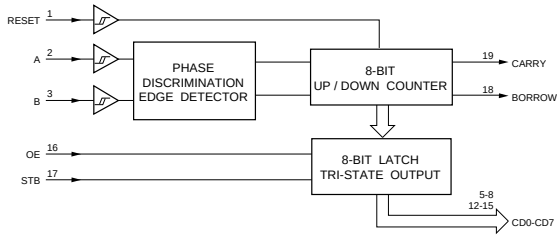

X24164SIC7000 (XICOR)(16K BIT)FLAT PACKAGE
X24C02S-3.0 (XICOR)(2K BIT)FLAT PACKAGE
X24C02S-3.0-C7000

C-MOS SERIAL EEPROM
-TOP VIEW-

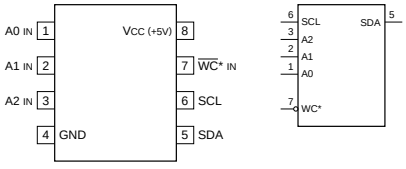

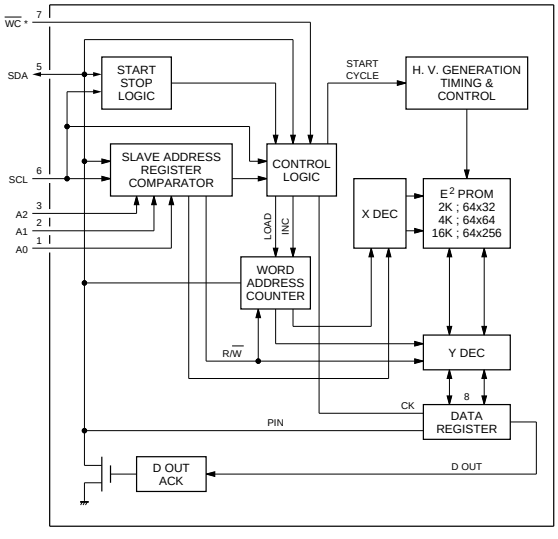

NOTE : * TEST (at X24164SIC7000)

UPD6453GT-610 (NEC)FLAT PACKAGE
UPD6453GT-610-E2

C-MOS ON-SCREEN CHARACTER DISPLAY
—TOP VIEW—

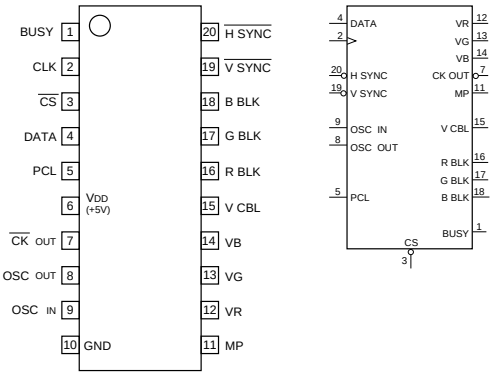

INPUT

CLK	;	CLOCK
CS	;	CHIP SELECT
DATA	;	SERIAL DATA
H SYNC	;	HORIZONTAL SYNC
OSC IN	;	OSCILLATOR IN
PCL	;	POWER ON CLEAR
V SYNC	;	VERTICAL SYNC

OUTPUT

BBLK, RBLK, GBLK	;	B, R, G, BLANKING
BUSY	;	BUSY OUT
CK OUT	;	CLOCK
MP	;	MASK PULSE
OSC OUT	;	OSCILLATOR OUT
VR, VG, VB	;	R, G, B, CHARACTER DATA
VCBL	;	VIDEO CUT BLANKING

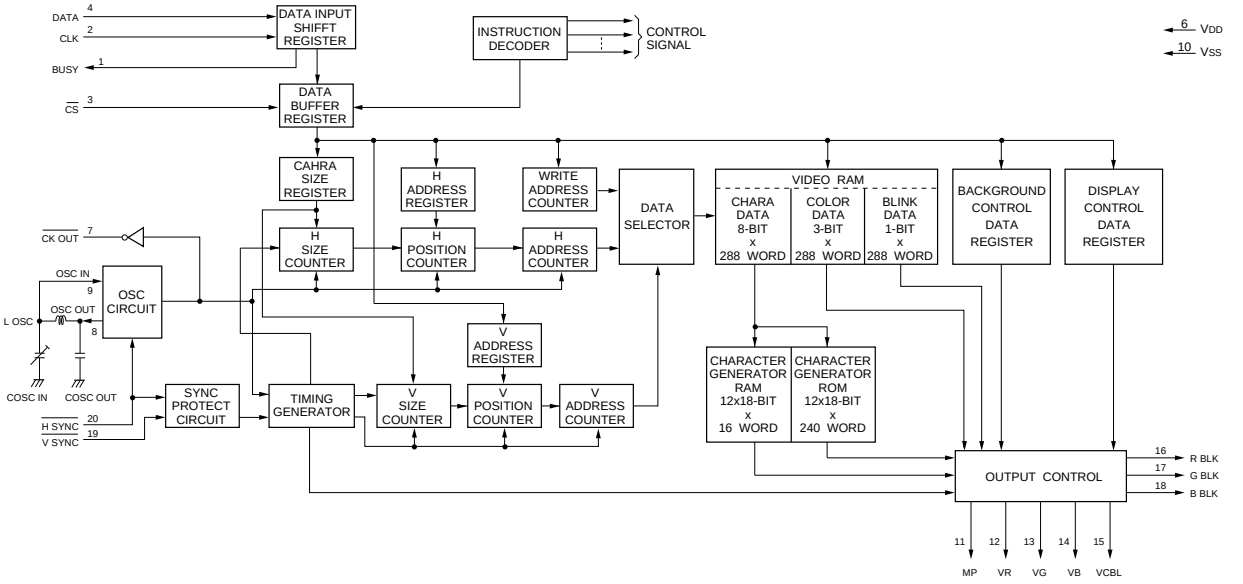

UPD71051GB-10-3B4 (NEC)FLAT PACKAGE

C-MOS SERIAL CONTROLLER
-TOP VIEW-

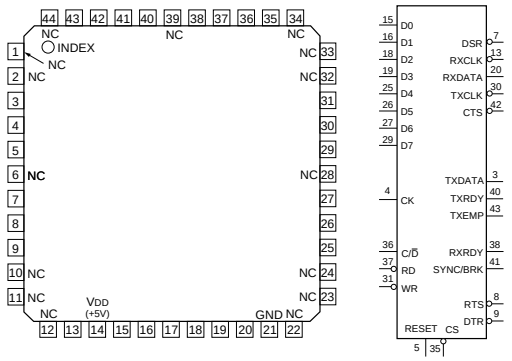

PIN No.	I/O	SYMBOL	PIN No.	I/O	SYMBOL	PIN No.	I/O	SYMBOL	PIN No.	I/O	SYMBOL
1	—	NC	12	—	NC	23	—	NC	34	—	NC
2	—	NC	13	I	RXCLK	24	—	NC	35	I	$\overline{CS}$
3	O	TXDATA	14	—	VDD(+5V)	25	I/O	D4	36	I	C/$\overline{D}$
4	I	CK	15	I/O	D0	26	I/O	D5	37	I	$\overline{RD}$
5	I	RESET	16	I/O	D1	27	I/O	D6	38	O	RXRDY
6	—	NC	17	—	IC	28	—	NC	39	—	NC
7	I	DSR	18	I/O	D2	29	I/O	D7	40	O	TXRDY
8	O	$\overline{RTS}$	19	I/O	D3	30	I	$\overline{TXCLK}$	41	I/O	SYNC/BRK
9	O	$\overline{DTR}$	20	I	RXDATA	31	I	$\overline{WR}$	42	I	$\overline{CTS}$
10	—	NC	21	—	GND	32	—	NC	43	O	TXEMP
11	—	NC	22	—	NC	33	—	NC	44	—	NC

CK ; CLOCK INPUT
CS ; CHIP SELECT INPUT
CTS ; CLEAR TO SEND OUTPUT
C/$\overline{D}$; CONTROL/DATA SELECT INPUT
D0-D7 ; DATA INPUTS/OUTPUTS
DSR ; DATA SET READY INPUT
DTR ; DATA TERMINAL READY OUTPUT
TXCLK ; TRANSMITTER CLOCK INPUT
TXDATA ; TRANSMIT DATA OUTPUT
TXEMP ; TRANSMITTER EMPTY OUTPUT
TXRDY ; TRANSMIT READY OUTPUT
RD ; READ STROBE INPUT
RESET ; RESET INPUT
RTS ; REQUEST TO SEND OUTPUT
RXCLK ; RECEIVER CLOCK INPUT
RXDATA ; RECEIVE DATA INPUT
RXRDY ; RECEIVER READY OUTPUT
SYNC/BRK ; SYNCHRONIZATION/BREAK INPUT/OUTPUT
WR ; WRITE STROBE INPUT

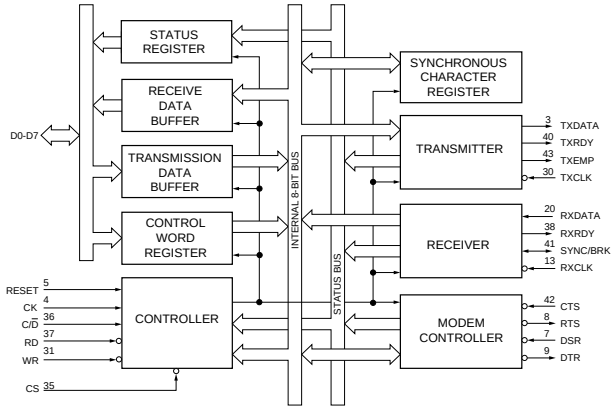

UPD71055GB-10-3B4 (NEC)FLAT PACKAGE

C-MOS PARALLEL INTERFACE UNIT
—TOP VIEW—

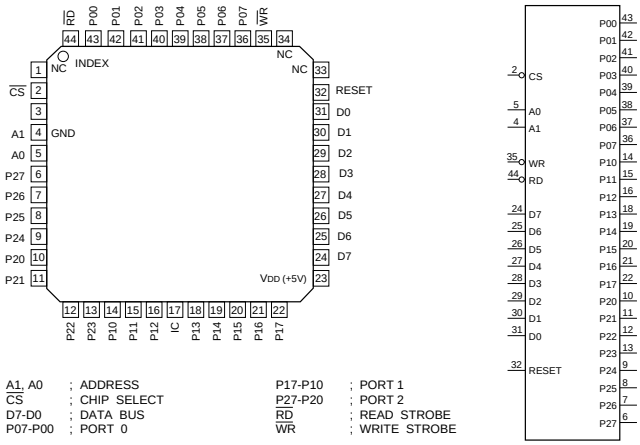

A1, A0 ; ADDRESS
$\overline{CS}$; CHIP SELECT
D7-D0 ; DATA BUS
P07-P00 ; PORT 0
P17-P10 ; PORT 1
P27-P20 ; PORT 2
$\overline{RD}$; READ STROBE
$\overline{WR}$; WRITE STROBE

IC ; INTERNALLY CONNECTED

CS	RD	WR	A1	A0	OPERATION	CPU ACTION
0	0	1	0	0	PORT0→DATA • BUS	INPUT
0	0	1	0	1	PORT1→DATA • BUS	INPUT
0	0	1	1	0	PORT2→DATA • BUS	INPUT
0	0	1	1	1	DISABLE	
0	0	0	X	X		
0	1	0	0	0	DATA • BUS→PORT0	OUTPUT
0	1	0	0	1	DATA • BUS→PORT1	OUTPUT
0	1	0	1	0	DATA • BUS→PORT2	OUTPUT
0	1	0	1	1	DATA • BUS→COMMAND REGISTER	OUTPUT
0	1	1	X	X	HIGH IMPEDANCE	
1	X	X	X	X		

0 ; LOW LEVEL
1 ; HIGH LEVEL
X ; DON'T CARE

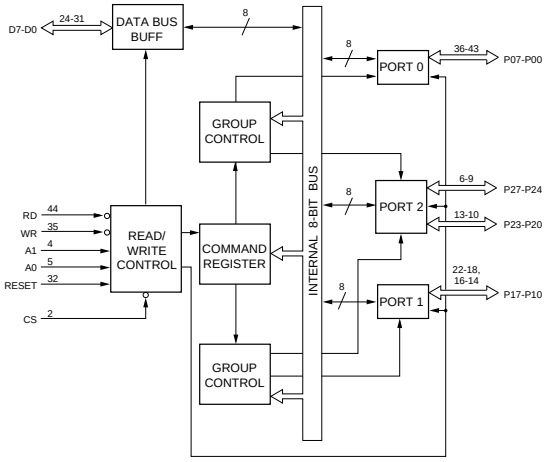

Section 3
Block Diagram

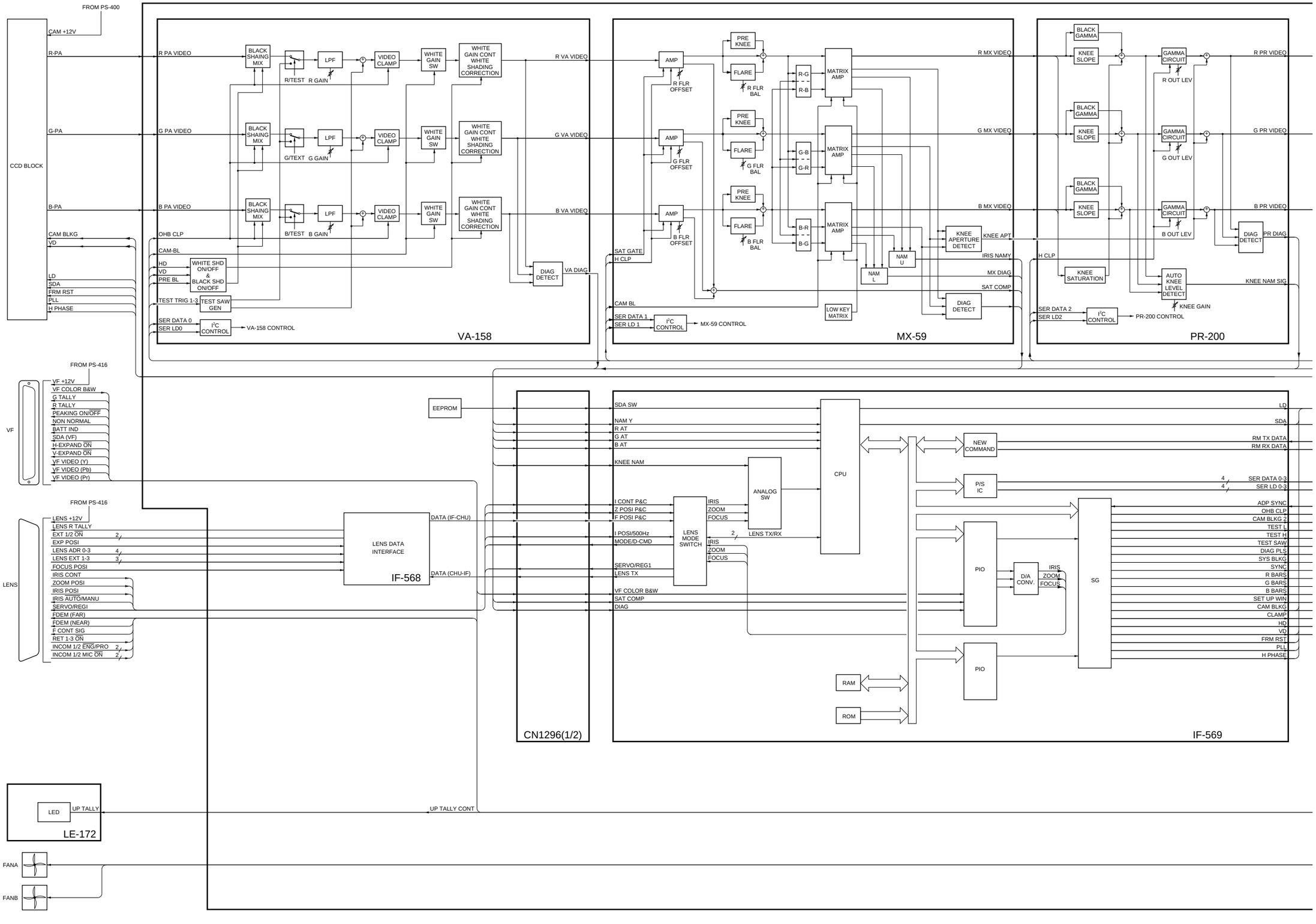
FROM PS-400
CCD BLOCK
CAM +12V
R-PA
G-PA
B-PA
CAM BLKG
VD
LD
SDA
FRM RST
PLL
H PHASE
R PA VIDEO
G PA VIDEO
B PA VIDEO
OHB CLP
CAM-BL
HD
VD
PRE BL
TEST TRIG 1-3
SER DATA 0
SER LD0
BLACK SHAING MIX
LPF
R/TEST R GAIN
G/TEXT G GAIN
B/TEST B GAIN
VIDEO CLAMP
WHITE GAIN SW
WHITE GAIN CONT WHITE SHADING CORRECTION
WHITE SHD ON/OFF & BLACK SHD ON/OFF
TEST SAW GEN
I²C CONTROL
VA-158 CONTROL
R VA VIDEO
G VA VIDEO
B VA VIDEO
DIAG DETECT
VA DIAG
VA-158
AMP
R FLR OFFSET
G FLR OFFSET
B FLR OFFSET
PRE KNEE
FLARE
R FLR BAL
G FLR BAL
B FLR BAL
R-G
G-B
B-R
MATRIX AMP
R MX VIDEO
G MX VIDEO
B MX VIDEO
SAT GATE
H CLP
CAM BL
SER DATA 1
SER LD 1
MX-59 CONTROL
NAM U
NAM L
LOW KEY MATRIX
KNEE APERTURE DETECT
KNEE APT
IRIS NAMY
MX DIAG
SAT COMP
DIAG DETECT
MX-59
BLACK GAMMA
KNEE SLOPE
GAMMA CIRCUIT
R OUT LEV
G OUT LEV
B OUT LEV
R PR VIDEO
G PR VIDEO
B PR VIDEO
DIAG DETECT
PR DIAG
KNEE SATURATION
AUTO KNEE LEVEL DETECT
KNEE NAM SIG
KNEE GAIN
SER DATA 2
SER LD2
I²C CONTROL
PR-200 CONTROL
PR-200
FROM PS-416
VF
VF +12V
VF COLOR B&W
G TALLY
R TALLY
PEAKING ON/OFF
NON NORMAL
BATT IND
SDA (VF)
H-EXPAND ON
V-EXPAND ON
VF VIDEO (Y)
VF VIDEO (Pb)
VF VIDEO (Pr)
FROM PS-416
LENS
LENS +12V
LENS R TALLY
EXT 1/2 ON
EXP POSI
LENS ADR 0-3
LENS EXT 1-3
FOCUS POSI
IRIS CONT
ZOOM POSI
IRIS POSI
IRIS AUTO/MANU
SERVO/REGI
FDEM (FAR)
FDEM (NEAR)
F CONT SIG
RET 1-3 ON
INCOM 1/2 ENG/PRO
INCOM 1/2 MIC ON
LED
UP TALLY
LE-172
FANA
FANB
EEPROM
LENS DATA INTERFACE
DATA (IF-CHU)
DATA (CHU-IF)
IF-568
CN1296(1/2)
SDA SW
NAM Y
R AT
G AT
B AT
KNEE NAM
I CONT P&C
Z POSI P&C
F POSI P&C
I POSI/500Hz
MODE/D-CMD
SERVO/REG1
LENS TX
VF COLOR B&W
SAT COMP
DIAG
LENS MODE SWITCH
IRIS
ZOOM
FOCUS
ANALOG SW
LENS TX/RX
CPU
RAM
ROM
NEW COMMAND
P/S IC
PIO
PIO
D/A CONV.
SG
RM TX DATA
RM RX DATA
SER DATA 0-3
SER LD 0-3
ADP SYNC
OHB CLP
CAM BLKG 2
TEST L
TEST H
TEST SAW
DIAG PLS
SYS BLKG
SYNC
R BARS
G BARS
B BARS
SET UP WIN
CAM BLKG
CLAMP
HD
VD
FRM RST
PLL
H PHASE
IF-569

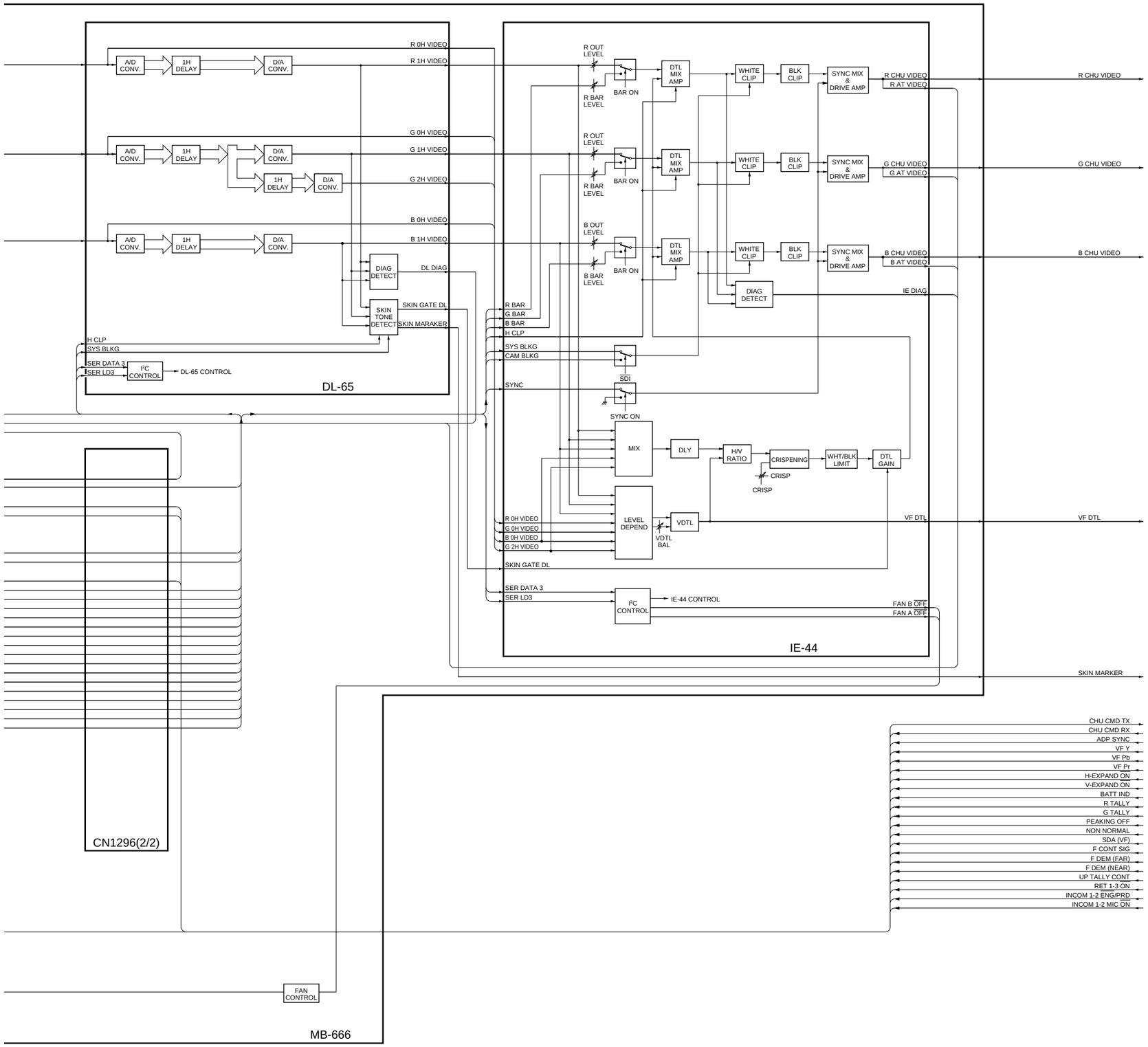

OVERALL (1/2)

HDC-700

HDC700-OVERALL1/M#1, #2

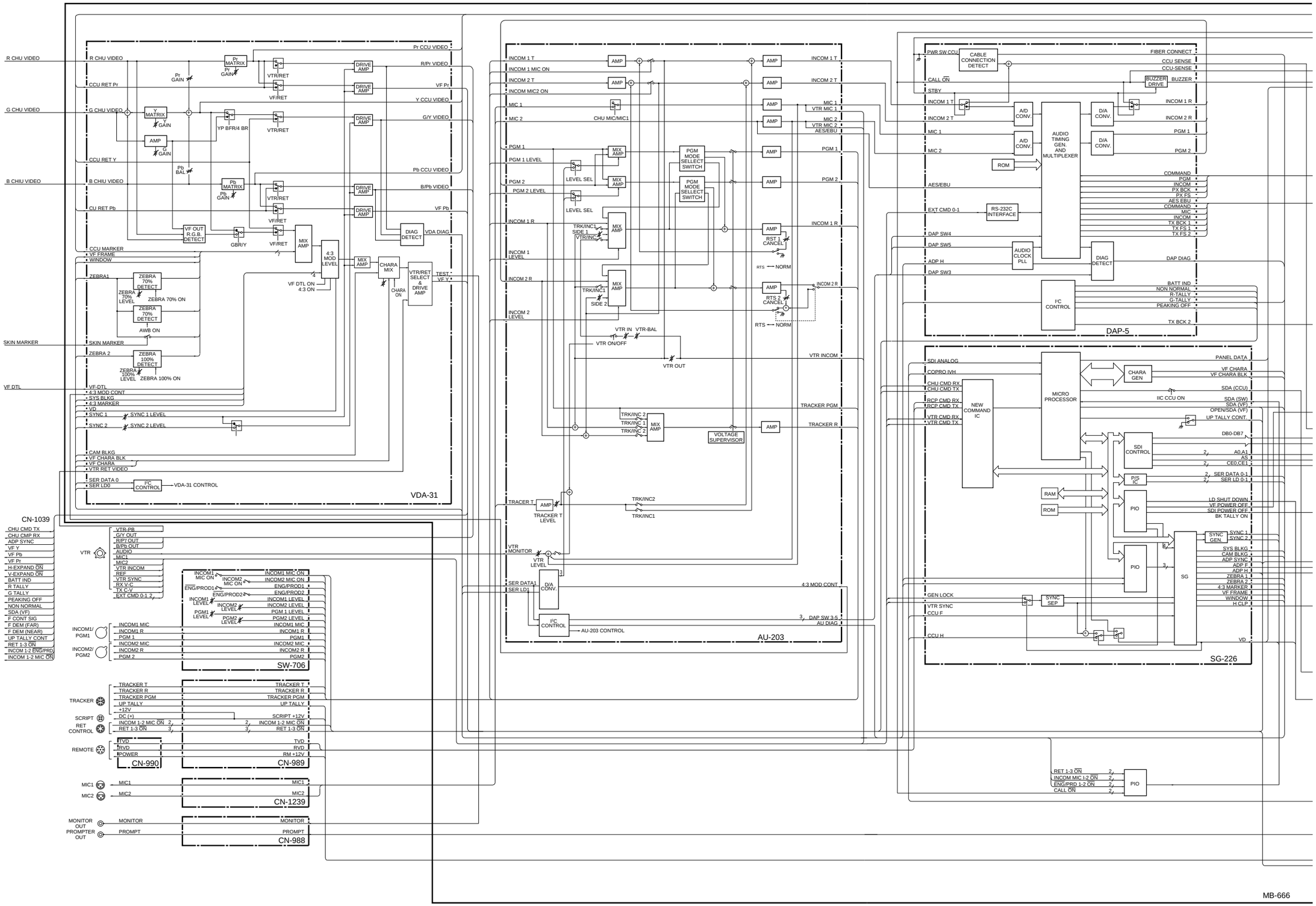
R CHU VIDEO
CCU RET Pr
G CHU VIDEO
CCU RET Y
B CHIU VIDEO
CU RET Pb
SKIN MARKER
VF DTL
CN-1039
VDA-31
SW-706
CN-990
CN-989
CN-1239
CN-988
AU-203
DAP-5
SG-226
MB-666

http://getMANUAL.com

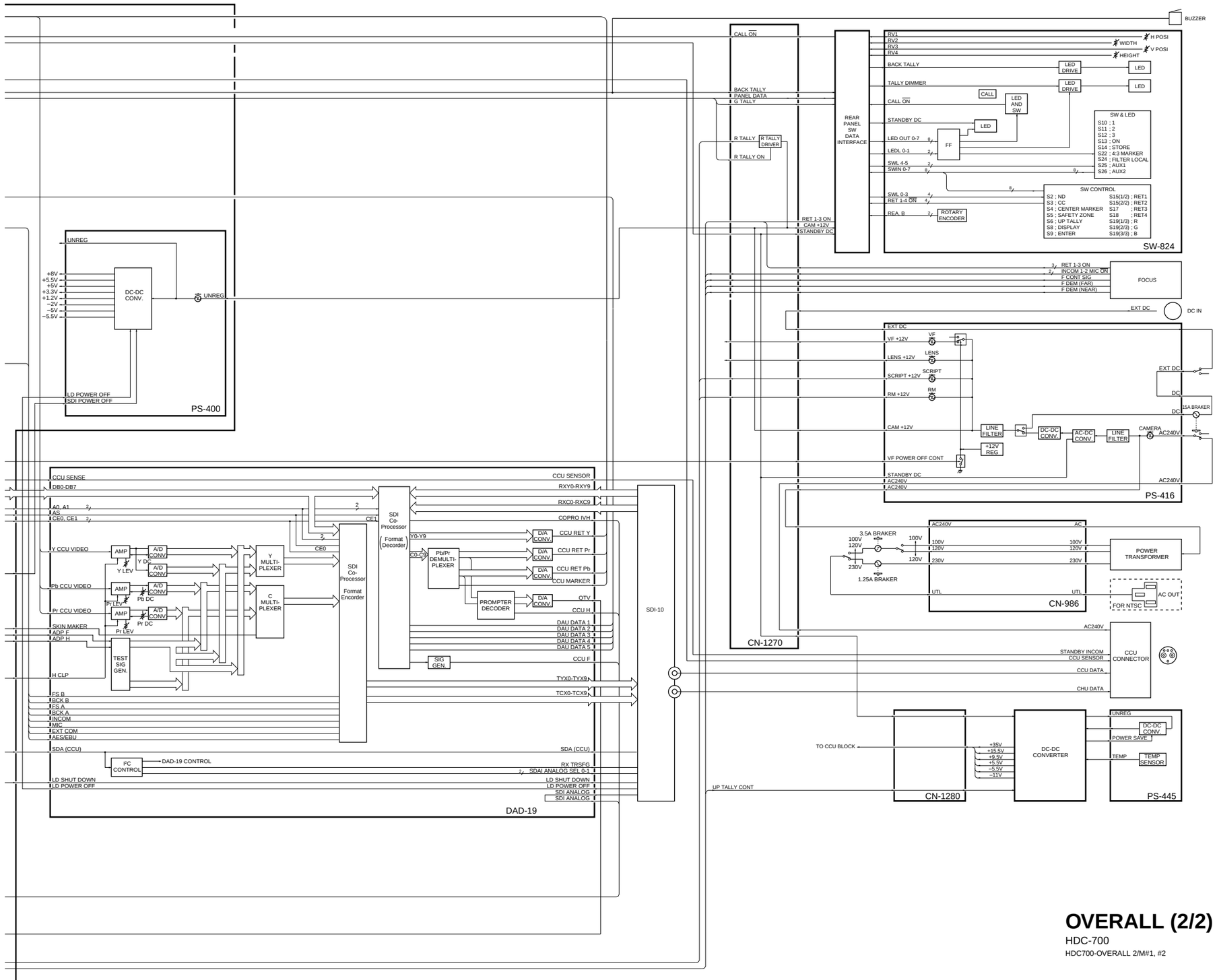

OVERALL (2/2)

HDC-700

HDC700-OVERALL 2/M#1, #2

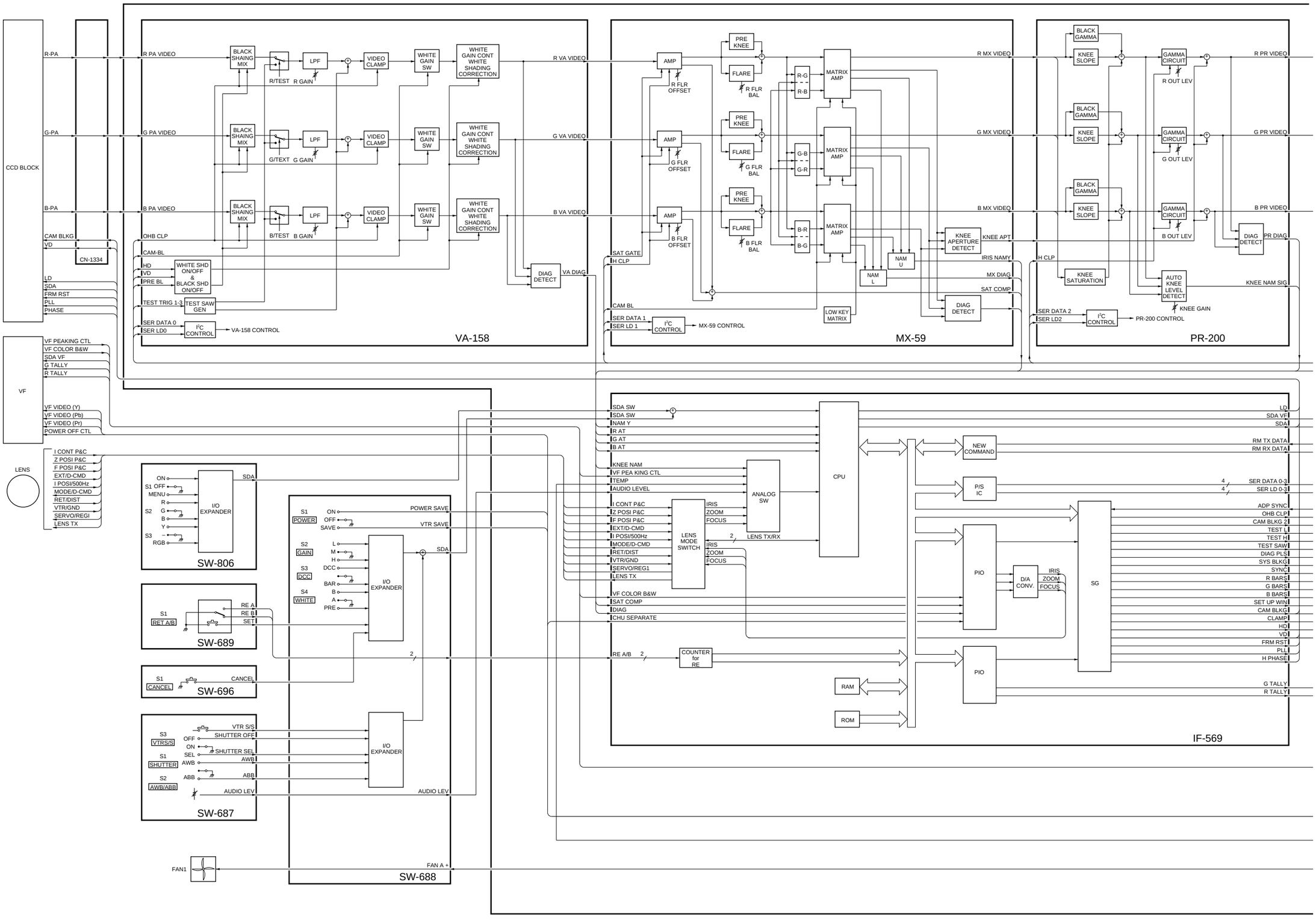
CCD BLOCK
R-PA
G-PA
B-PA
CAM BLKG
VD
CN-1334
LD
SDA
FRM RST
PLL
PHASE
R PA VIDEO
G PA VIDEO
B PA VIDEO
OHB CLP
CAM-BL
HD
VD
PRE BL
WHITE SHD ON/OFF & BLACK SHD ON/OFF
TEST TRIG 1-3
TEST SAW GEN
SER DATA 0
SER LD0
I²C CONTROL
VA-158 CONTROL
BLACK SHAING MIX
R/TEST
G/TEXT
B/TEST
R GAIN
G GAIN
B GAIN
LPF
VIDEO CLAMP
WHITE GAIN SW
WHITE GAIN CONT WHITE SHADING CORRECTION
R VA VIDEO
G VA VIDEO
B VA VIDEO
DIAG DETECT
VA DIAG
VA-158
AMP
R FLR OFFSET
G FLR OFFSET
B FLR OFFSET
SAT GATE
H CLP
CAM BL
SER DATA 1
SER LD 1
I²C CONTROL
MX-59 CONTROL
PRE KNEE
FLARE
R FLR BAL
G FLR BAL
B FLR BAL
R-G
R-B
G-B
G-R
B-R
B-G
MATRIX AMP
LOW KEY MATRIX
NAM U
NAM L
KNEE APERTURE DETECT
KNEE APT
IRIS NAMY
MX DIAG
SAT COMP
DIAG DETECT
R MX VIDEO
G MX VIDEO
B MX VIDEO
MX-59
BLACK GAMMA
KNEE SLOPE
GAMMA CIRCUIT
R OUT LEV
G OUT LEV
B OUT LEV
R PR VIDEO
G PR VIDEO
B PR VIDEO
DIAG DETECT
PR DIAG
H CLP
KNEE SATURATION
AUTO KNEE LEVEL DETECT
KNEE NAM SIG
KNEE GAIN
SER DATA 2
SER LD2
I²C CONTROL
PR-200 CONTROL
PR-200
VF
VF PEAKING CTL
VF COLOR B&W
SDA VF
G TALLY
R TALLY
VF VIDEO (Y)
VF VIDEO (Pb)
VF VIDEO (Pr)
POWER OFF CTL
LENS
I CONT P&C
Z POSI P&C
F POSI P&C
EXT/D-CMD
I POSI/500Hz
MODE/D-CMD
RET/DIST
VTR/GND
SERVO/REGI
LENS TX
SW-806
ON
S1 OFF
MENU
R
S2
G
B
Y
S3
RGB
I/O EXPANDER
SDA
SW-689
S1
RET A/B
RE A
RE B
SET
SW-696
CANCEL
SW-687
VTR S/S
SHUTTER OFF
SHUTTER SEL
AWB
ABB
AUDIO LEV
SW-688
POWER SAVE
VTR SAVE
S2 GAIN
S3 DCC
S4 WHITE
L
M
H
DCC
BAR
A
PRE
FAN1
FAN A +
SDA SW
NAM Y
R AT
G AT
B AT
KNEE NAM
VF PEA KING CTL
TEMP
AUDIO LEVEL
VF COLOR B&W
SAT COMP
DIAG
CHU SEPARATE
RE A/B
COUNTER for RE
LENS MODE SWITCH
IRIS
ZOOM
FOCUS
ANALOG SW
LENS TX/RX
CPU
NEW COMMAND
P/S IC
PIO
D/A CONV.
SG
RAM
ROM
ADP SYNC
OHB CLP
CAM BLKG
TEST L
TEST H
TEST SAW
DIAG PLS
SYS BLKG
SYNC
R BARS
G BARS
B BARS
SET UP WIN
CAM BLKG
CLAMP
HD
VD
FRM RST
PLL
H PHASE
RM TX DATA
RM RX DATA
SER DATA 0-3
SER LD 0-3
IF-569

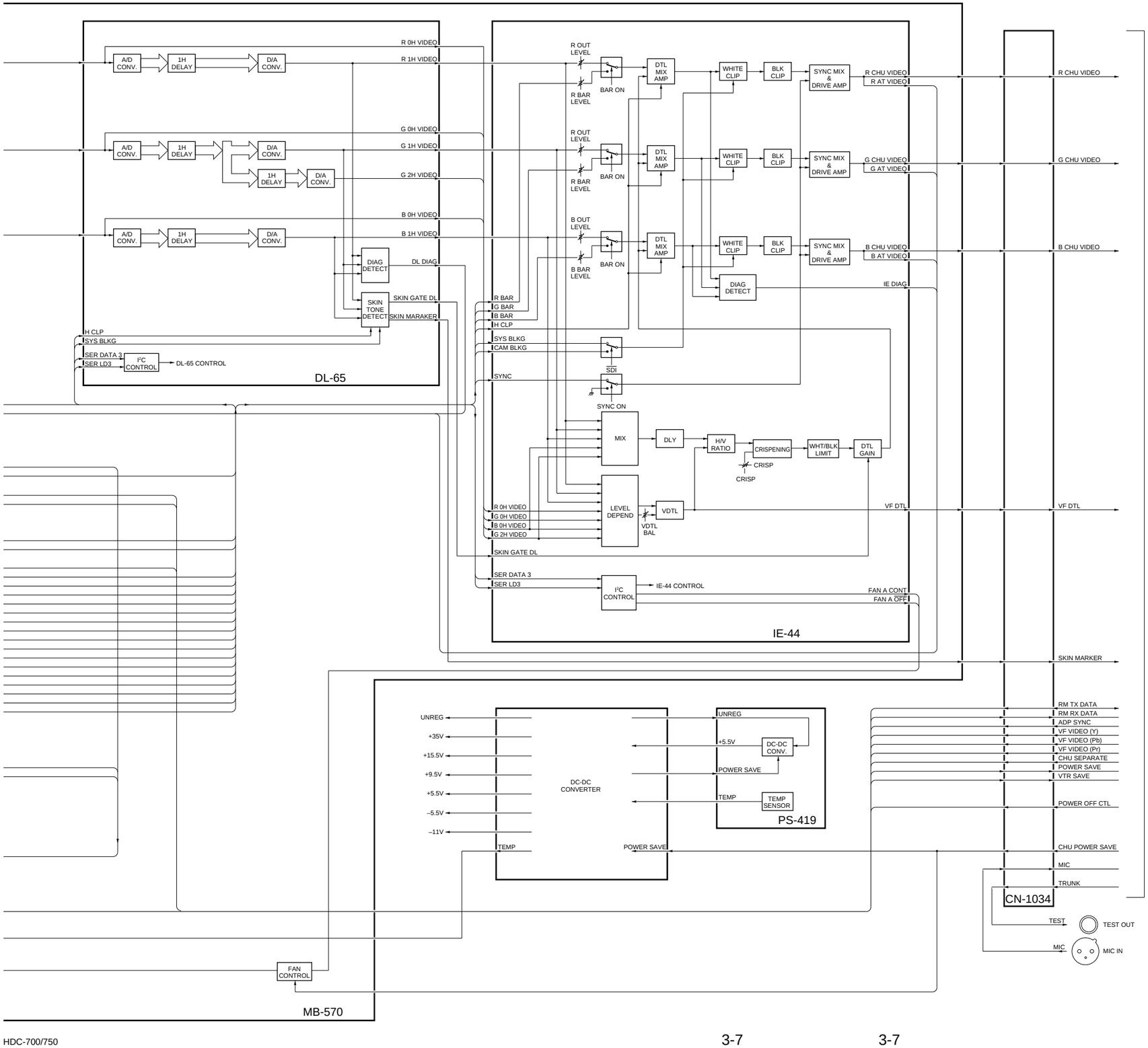

OVERALL

HDC-750

HDC750-OVERALL/M#1, #2

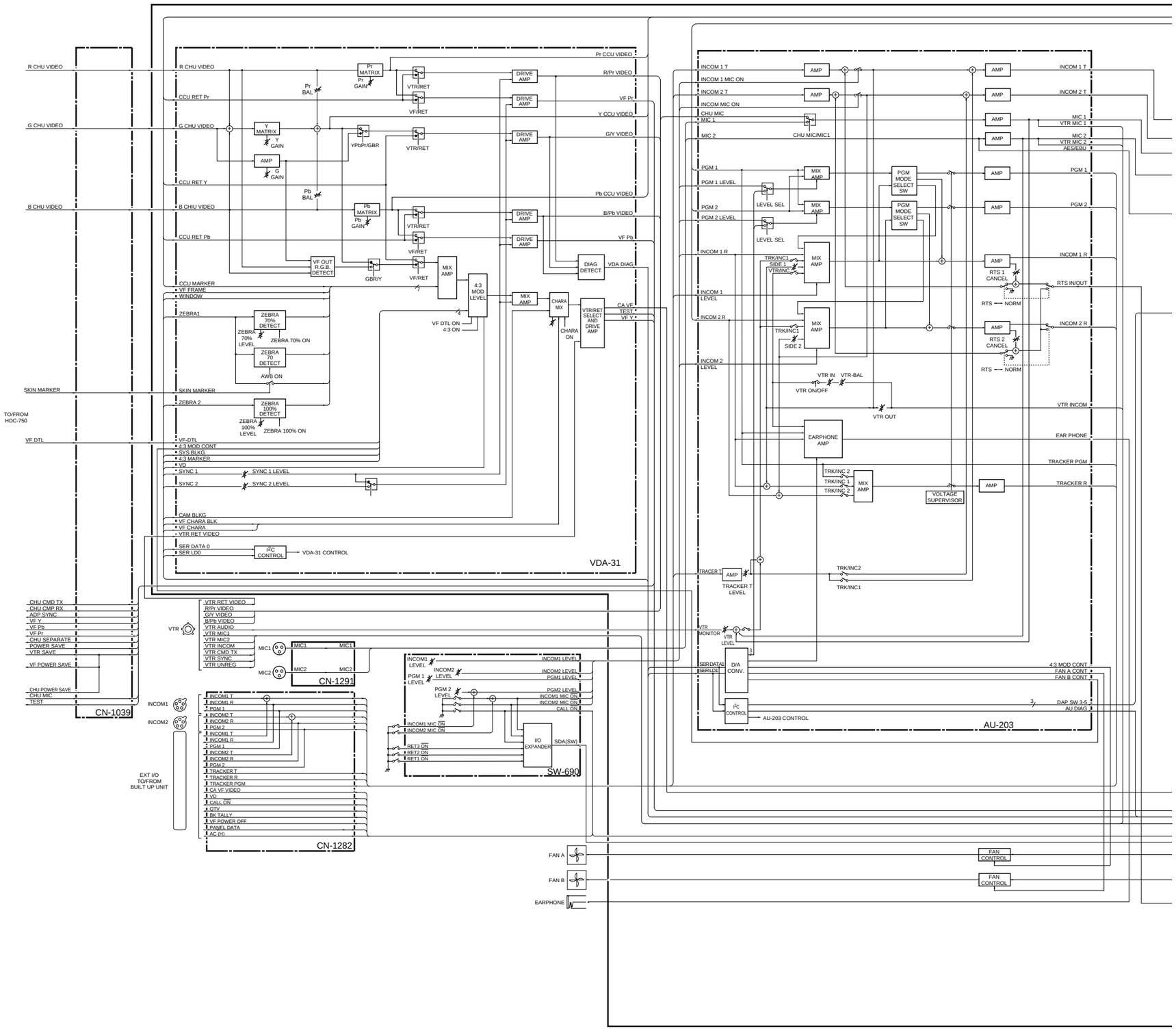
R CHU VIDEO
G CHU VIDEO
B CHU VIDEO
SKIN MARKER
TO/FROM HDC-750
VF DTL
Pr MATRIX
Y MATRIX
Pb MATRIX
VTR/RET
VF/RET
DRIVE AMP
MIX AMP
4:3 MOD LEVEL
VF DTL ON 4:3 ON
VF OUT R.G.B. DETECT
GBR/Y
DIAG DETECT
CHARA MIX
CHARA ON
VTR/RET SELECT AND DRIVE AMP
ZEBRA 70% DETECT
ZEBRA 70 DETECT
ZEBRA 100% DETECT
AWB ON
ZEBRA 70% ON
ZEBRA 100% ON
CCU MARKER
VF FRAME
WINDOW
ZEBRA1
ZEBRA 2
VF-DTL
4:3 MOD CONT
SYS BLKG
4:3 MARKER
VD
SYNC 1
SYNC 2
SYNC 1 LEVEL
SYNC 2 LEVEL
CAM BLKG
VF CHARA BLK
VF CHARA
VTR RET VIDEO
SER DATA 0
SER LD0
I²C CONTROL
VDA-31 CONTROL
VDA-31
Pr CCU VIDEO
R/Pr VIDEO
VF Pr
Y CCU VIDEO
G/Y VIDEO
Pb CCU VIDEO
B/Pb VIDEO
VF Pb
VDA DIAG
CA VF
TEST
VF Y
INCOM 1 T
INCOM 1 MIC ON
INCOM 2 T
INCOM MIC ON
CHU MIC
MIC 1
MIC 2
CHU MIC/MIC1
PGM 1
PGM 1 LEVEL
PGM 2
PGM 2 LEVEL
LEVEL SEL
MIX AMP
PGM MODE SELECT SW
INCOM 1 R
INCOM 1 LEVEL
INCOM 2 R
INCOM 2 LEVEL
TRK/INC1
SIDE 1
SIDE 2
VTR/INC1
RTS 1 CANCEL
RTS 2 CANCEL
RTS IN/OUT
RTS
NORM
VTR IN
VTR-BAL
VTR ON/OFF
VTR OUT
VTR INCOM
EARPHONE AMP
EAR PHONE
TRACKER PGM
TRK/INC 2
TRK/INC 1
TRACKER R
VOLTAGE SUPERVISOR
TRACER T
TRACKER T LEVEL
TRK/INC2
TRK/INC1
VTR MONITOR
VTR LEVEL
SERDAT1
SERLD1
D/A CONV.
AU-203 CONTROL
AU-203
4:3 MOD CONT
FAN A CONT
FAN B CONT
DAP SW 3-5
AU DIAG
CHU CMD TX
CHU CMP RX
ADP SYNC
VF Y
VF Pb
VF Pr
CHU SEPARATE
POWER SAVE
VTR SAVE
VF POWER SAVE
CHU POWER SAVE
CHU MIC
TEST
CN-1039
VTR
VTR RET VIDEO
R/Pr VIDEO
G/Y VIDEO
B/Pb VIDEO
VTR AUDIO
VTR MIC1
VTR MIC2
VTR INCOM
VTR CMD TX
VTR SYNC
VTR UNREG
MIC1
MIC2
CN-1291
INCOM1
INCOM2
INCOM1 T
INCOM1 R
PGM 1
INCOM2 T
INCOM2 R
PGM 2
TRACKER T
TRACKER R
TRACKER PGM
CA VF VIDEO
I/O
CALL ON
QTV
BK TALLY
VF POWER OFF
PANEL DATA
AC (H)
EXT I/O TO/FROM BUILT UP UNIT
CN-1282
INCOM1 MIC ON
INCOM2 MIC ON
CALL ON
I/O EXPANDER
SDA(SW)
RET3 ON
RET2 ON
RET1 ON
SW-690
FAN A
FAN B
EARPHONE
FAN CONTROL

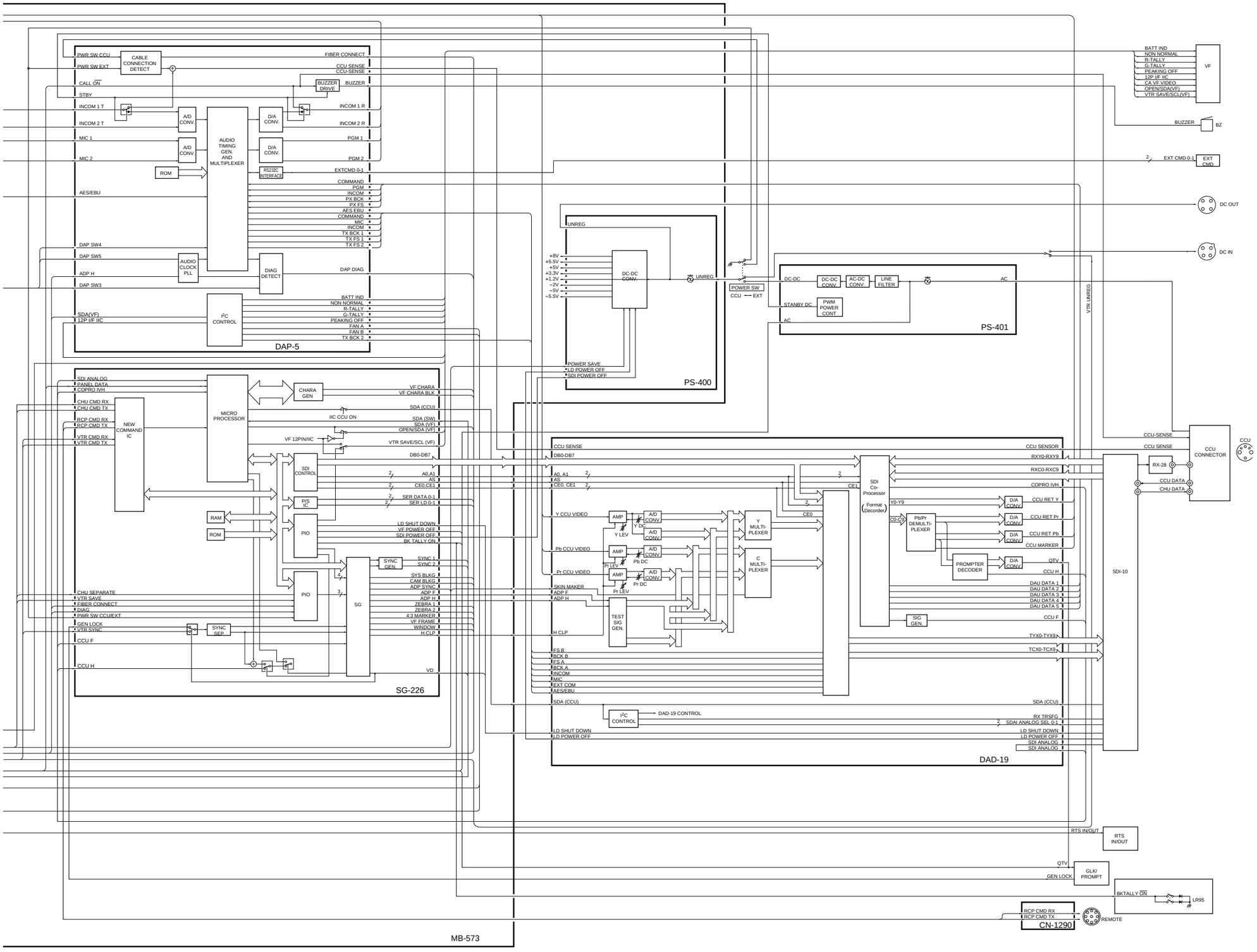

OVERALL
HDCA-750
HDCA750-OVERALL/M#1, #2

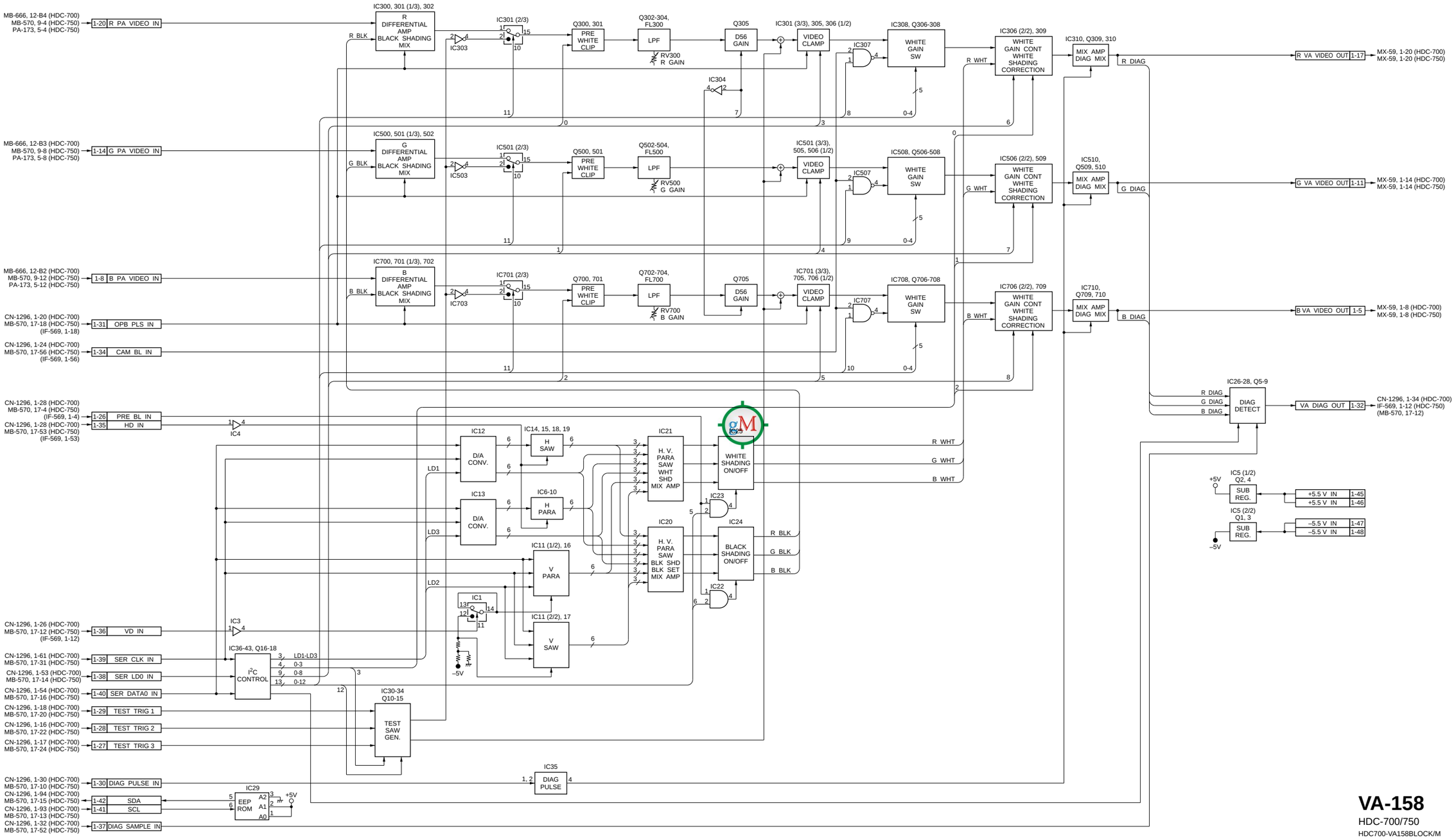

VA-158
HDC-700/750
HDC700-VA158BLOCK/M

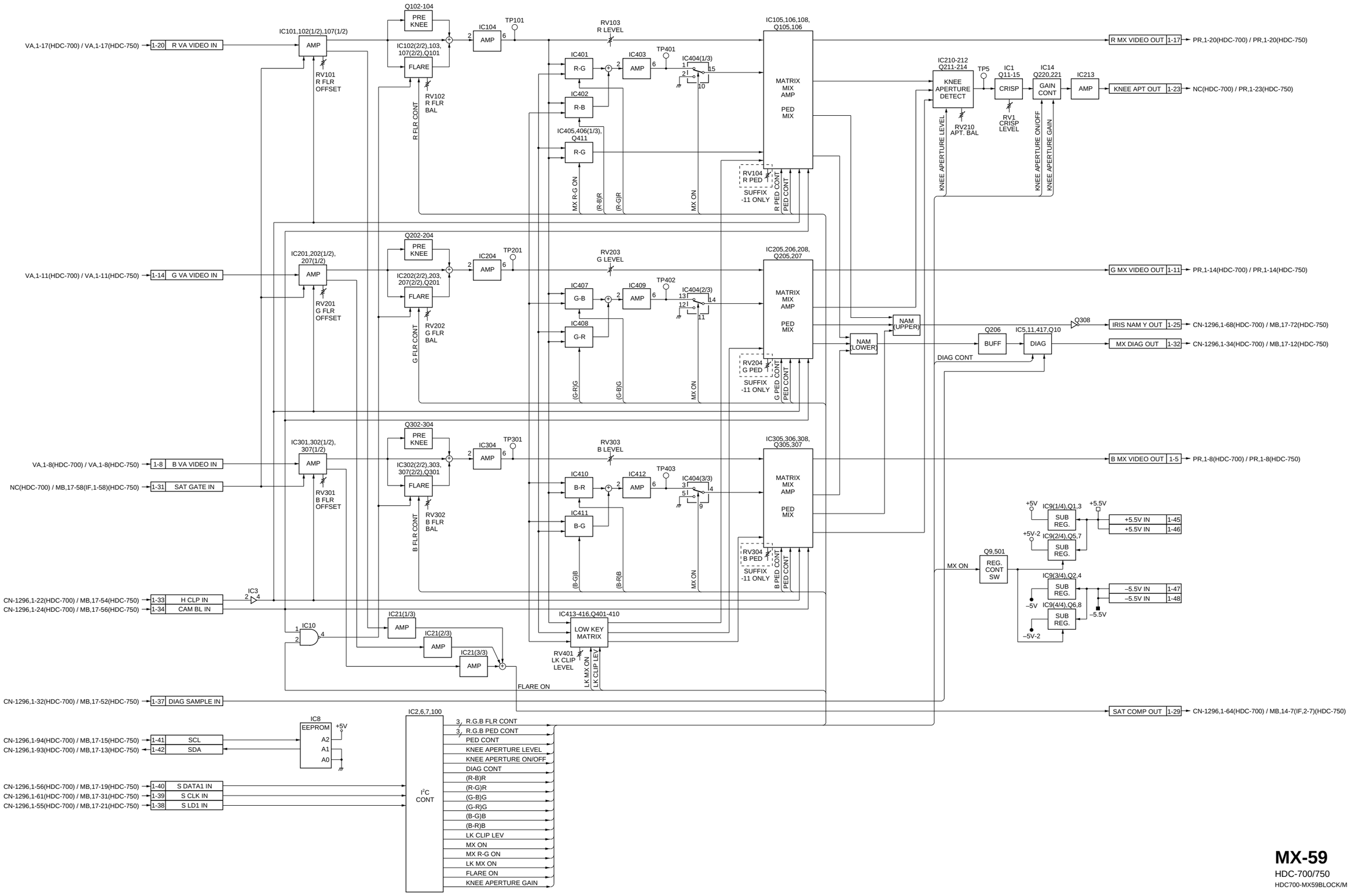

MX-59
HDC-700/750
HDC700-MX59BLOCK/M

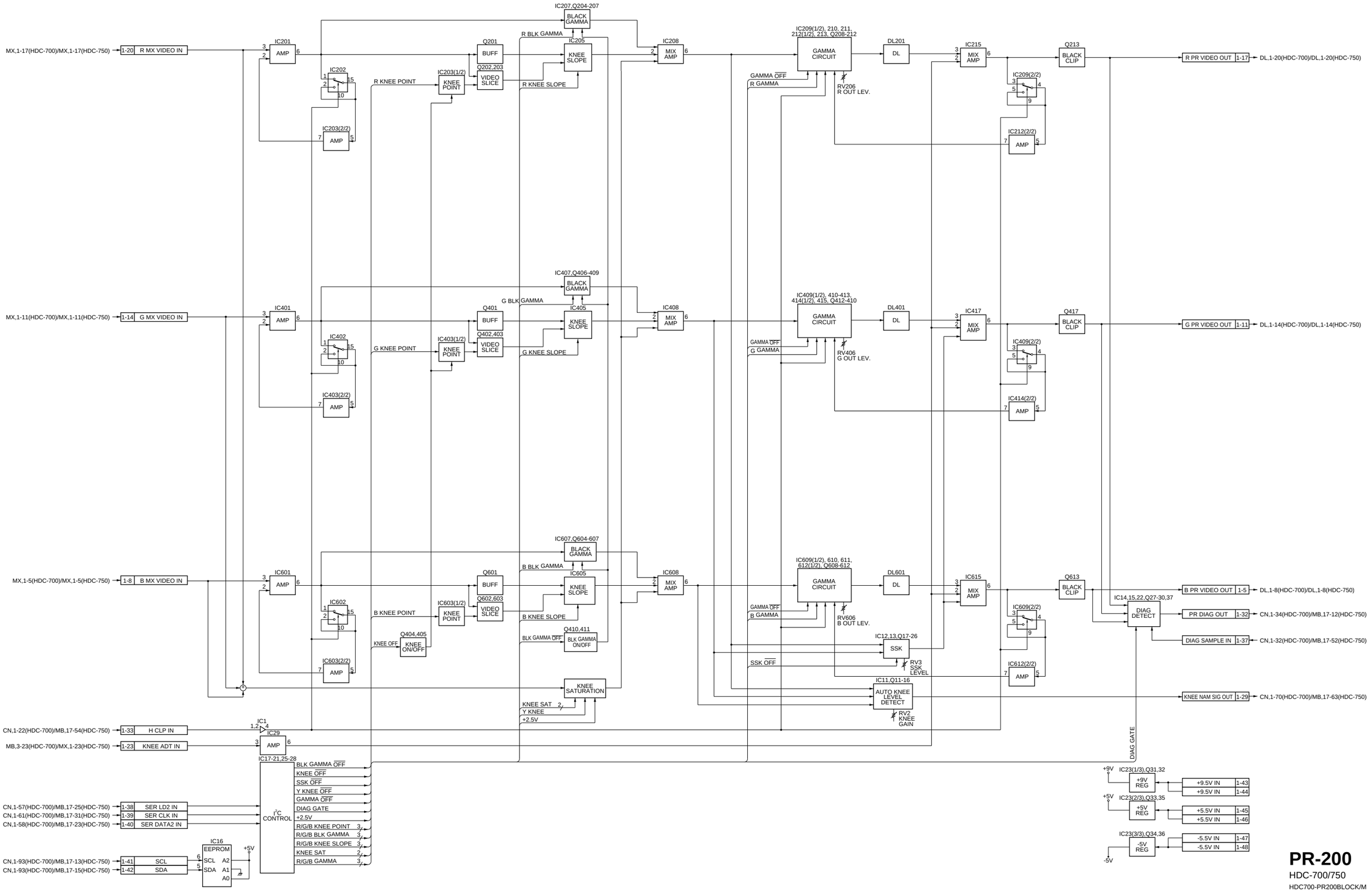

PR-200
HDC-700/750
HDC700-PR200BLOCK/M

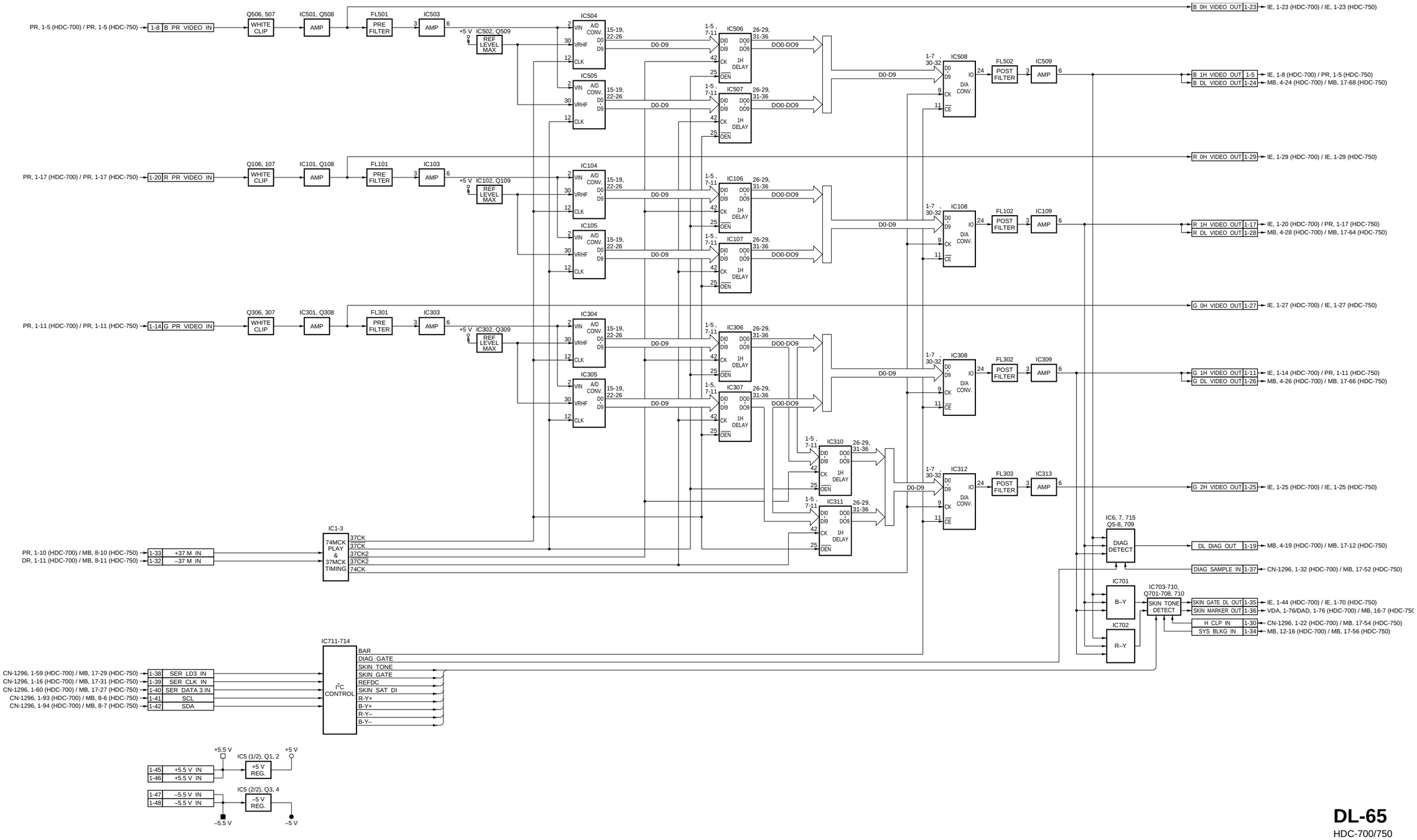

DL-65
HDC-700/750
HDC700-DL65BLOCK/M

http://getMANUAL.com

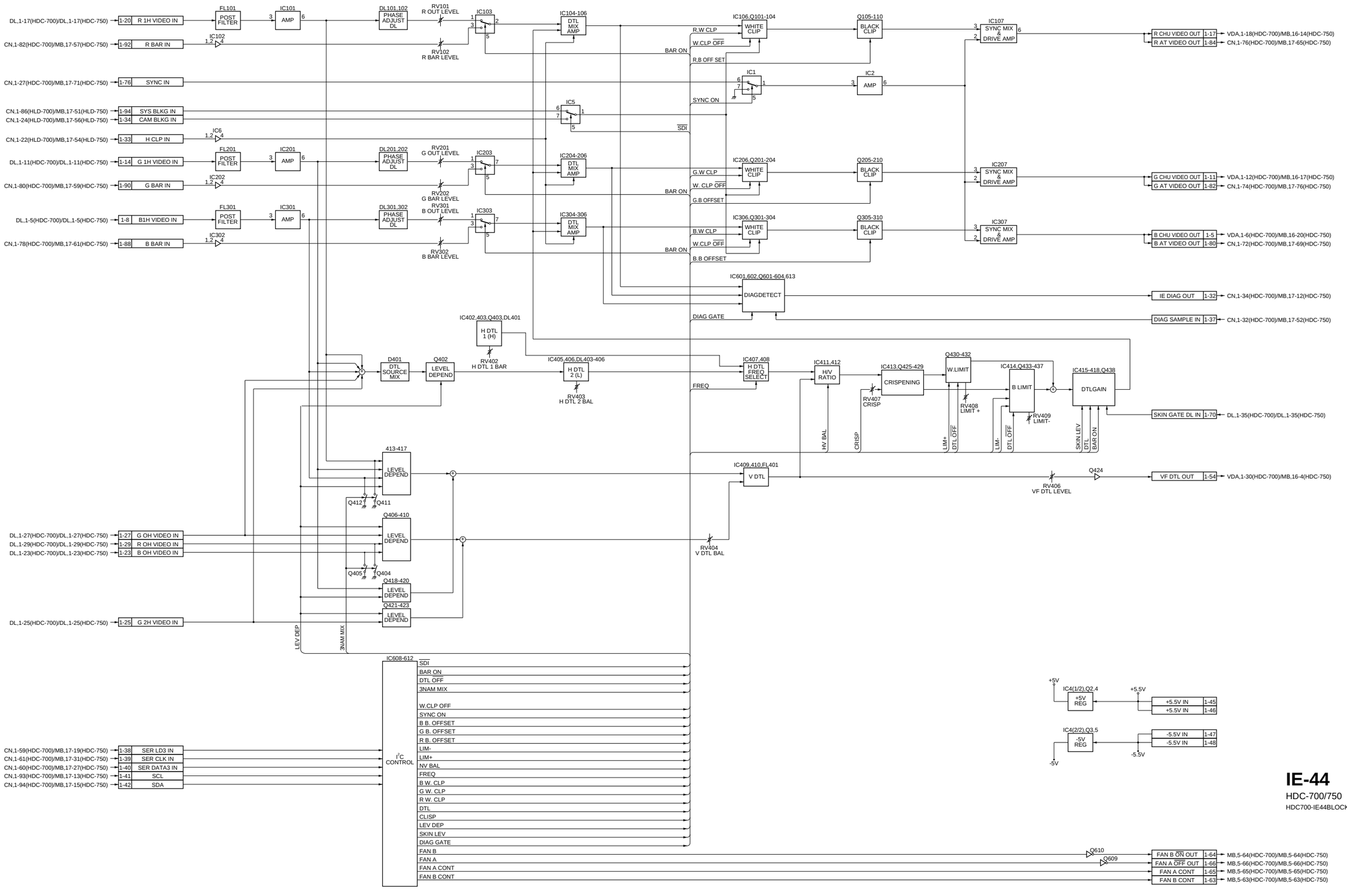

IE-44
HDC-700/750
HDC700-IE44BLOCK/M

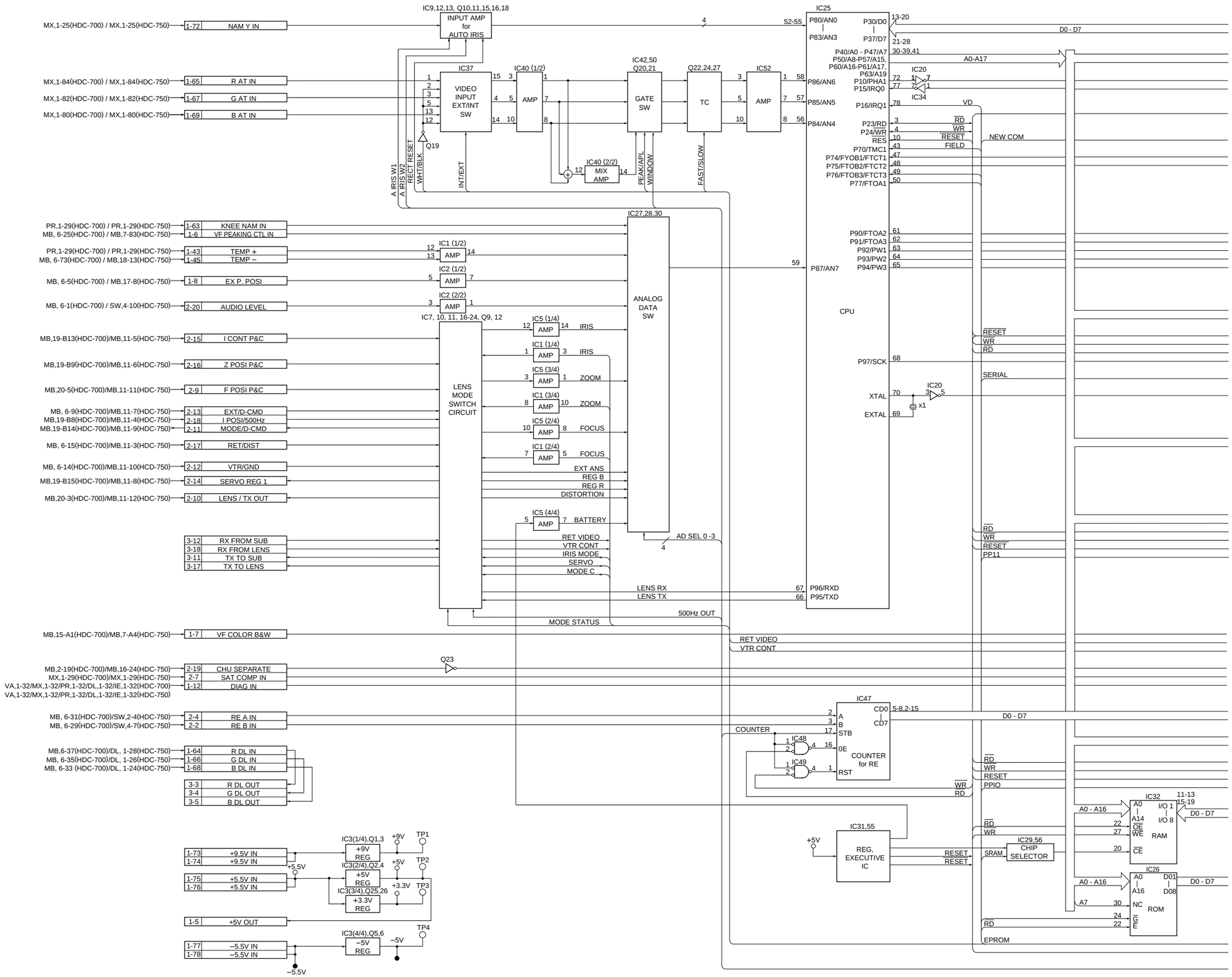
MX,1-25(HDC-700) / MX,1-25(HDC-750)
1-72 NAM Y IN
MX,1-84(HDC-700) / MX,1-84(HDC-750)
1-65 R AT IN
MX,1-82(HDC-700) / MX,1-82(HDC-750)
1-67 G AT IN
MX,1-80(HDC-700) / MX,1-80(HDC-750)
1-69 B AT IN
IC9,12,13, Q10,11,15,16,18
INPUT AMP for AUTO IRIS
IC37
VIDEO INPUT EXT/INT SW
IC40 (1/2)
AMP
IC42,50 Q20,21
GATE SW
Q22,24,27
TC
IC52
AMP
IC25
P80/AN0 | P83/AN3
P30/D0 | P37/D7
P86/AN6
P85/AN5
P84/AN4
P40/A0 - P47/A7
P50/A8-P57/A15,
P60/A16-P61/A17,
P63/A19
P10/PHA1
P15/IRQ0
P16/IRQ1
P23/RD
P24/WR
RES
P70/TMC1
P74/FYOB1/FTCT1
P75/FTOB2/FTCT2
P76/FTOB3/FTCT3
P77/FTOA1
IC20
IC34
D0 - D7
A0-A17
VD
RD
WR
RESET
FIELD
NEW COM
Q19
A IRIS W1
A IRIS W2
RECT RESET
WHT/BLK
INT/EXT
IC40 (2/2)
MIX AMP
PEAK/APL
WINDOW
FAST/SLOW
IC27,28,30
ANALOG DATA SW
PR,1-29(HDC-700) / PR,1-29(HDC-750)
MB, 6-25(HDC-700) / MB,7-83(HDC-750)
1-63 KNEE NAM IN
1-6 VF PEAKING CTL IN
PR,1-29(HDC-700) / PR,1-29(HDC-750)
MB, 6-73(HDC-700) / MB,18-13(HDC-750)
1-43 TEMP +
1-45 TEMP –
IC1 (1/2)
AMP
MB, 6-5(HDC-700) / MB,17-8(HDC-750)
1-8 EX P. POSI
IC2 (1/2)
AMP
MB, 6-1(HDC-700) / SW,4-10(HDC-750)
2-20 AUDIO LEVEL
IC2 (2/2)
AMP
P87/AN7
CPU
P90/FTOA2
P91/FTOA3
P92/PW1
P93/PW2
P94/PW3
IC7, 10, 11, 16-24, Q9, 12
LENS MODE SWITCH CIRCUIT
MB,19-B13(HDC-700)/MB,11-5(HDC-750)
2-15 I CONT P&C
MB,19-B9(HDC-700)/MB,11-6(HDC-750)
2-16 Z POSI P&C
MB,20-5(HDC-700)/MB,11-11(HDC-750)
2-9 F POSI P&C
MB, 6-9(HDC-700)/MB,11-7(HDC-750)
MB,19-B8(HDC-700)/MB,11-4(HDC-750)
MB,19-B14(HDC-700)/MB,11-9(HDC-750)
2-13 EXT/D-CMD
2-18 I POSI/500Hz
2-11 MODE/D-CMD
MB, 6-15(HDC-700)/MB,11-3(HDC-750)
2-17 RET/DIST
MB, 6-14(HDC-700)/MB,11-10(HCD-750)
2-12 VTR/GND
MB,19-B15(HDC-700)/MB,11-8(HDC-750)
2-14 SERVO REG 1
MB,20-3(HDC-700)/MB,11-12(HDC-750)
2-10 LENS / TX OUT
IC5 (1/4) IRIS
IC1 (1/4) IRIS
IC5 (3/4) ZOOM
IC1 (3/4) ZOOM
IC5 (2/4) FOCUS
IC1 (2/4) FOCUS
EXT ANS
REG B
REG R
DISTORTION
IC5 (4/4) BATTERY
RET VIDEO
VTR CONT
IRIS MODE
SERVO
MODE C
AD SEL 0 -3
LENS RX
LENS TX
MODE STATUS
500Hz OUT
P96/RXD
P95/TXD
3-12 RX FROM SUB
3-18 RX FROM LENS
3-11 TX TO SUB
3-17 TX TO LENS
MB,15-A1(HDC-700)/MB,7-A4(HDC-750)
1-7 VF COLOR B&W
Q23
MB,2-19(HDC-700)/MB,16-24(HDC-750)
MX,1-29(HDC-700)/MX,1-29(HDC-750)
VA,1-32/MX,1-32/PR,1-32/DL,1-32/IE,1-32(HDC-700)
VA,1-32/MX,1-32/PR,1-32/DL,1-32/IE,1-32(HDC-750)
2-19 CHU SEPARATE
2-7 SAT COMP IN
1-12 DIAG IN
MB, 6-31(HDC-700)/SW,2-4(HDC-750)
MB, 6-29(HDC-700)/SW,4-7(HDC-750)
2-4 RE A IN
2-2 RE B IN
MB,6-37(HDC-700)/DL, 1-28(HDC-750)
MB, 6-35(HDC-700)/DL, 1-26(HDC-750)
MB, 6-33 (HDC-700)/DL, 1-24(HDC-750)
1-64 R DL IN
1-66 G DL IN
1-68 B DL IN
3-3 R DL OUT
3-4 G DL OUT
3-5 B DL OUT
IC47
COUNTER for RE
IC48
IC49
COUNTER
IC31,55
REG, EXECUTIVE IC
IC29,56
CHIP SELECTOR
SRAM
IC32
RAM
IC26
ROM
EPROM
A0 - A16
D0 - D7
RESET
WR
RD
PPIO
PP11
SERIAL
XTAL
EXTAL
x1
+5V
1-73 +9.5V IN
1-74 +9.5V IN
1-75 +5.5V IN
1-76 +5.5V IN
1-5 +5V OUT
1-77 –5.5V IN
1-78 –5.5V IN
IC3(1/4),Q1,3 +9V REG
IC3(2/4),Q2,4 +5V REG
IC3(3/4),Q25,26 +3.3V REG
IC3(4/4),Q5,6 –5V REG
TP1
TP2
TP3
TP4

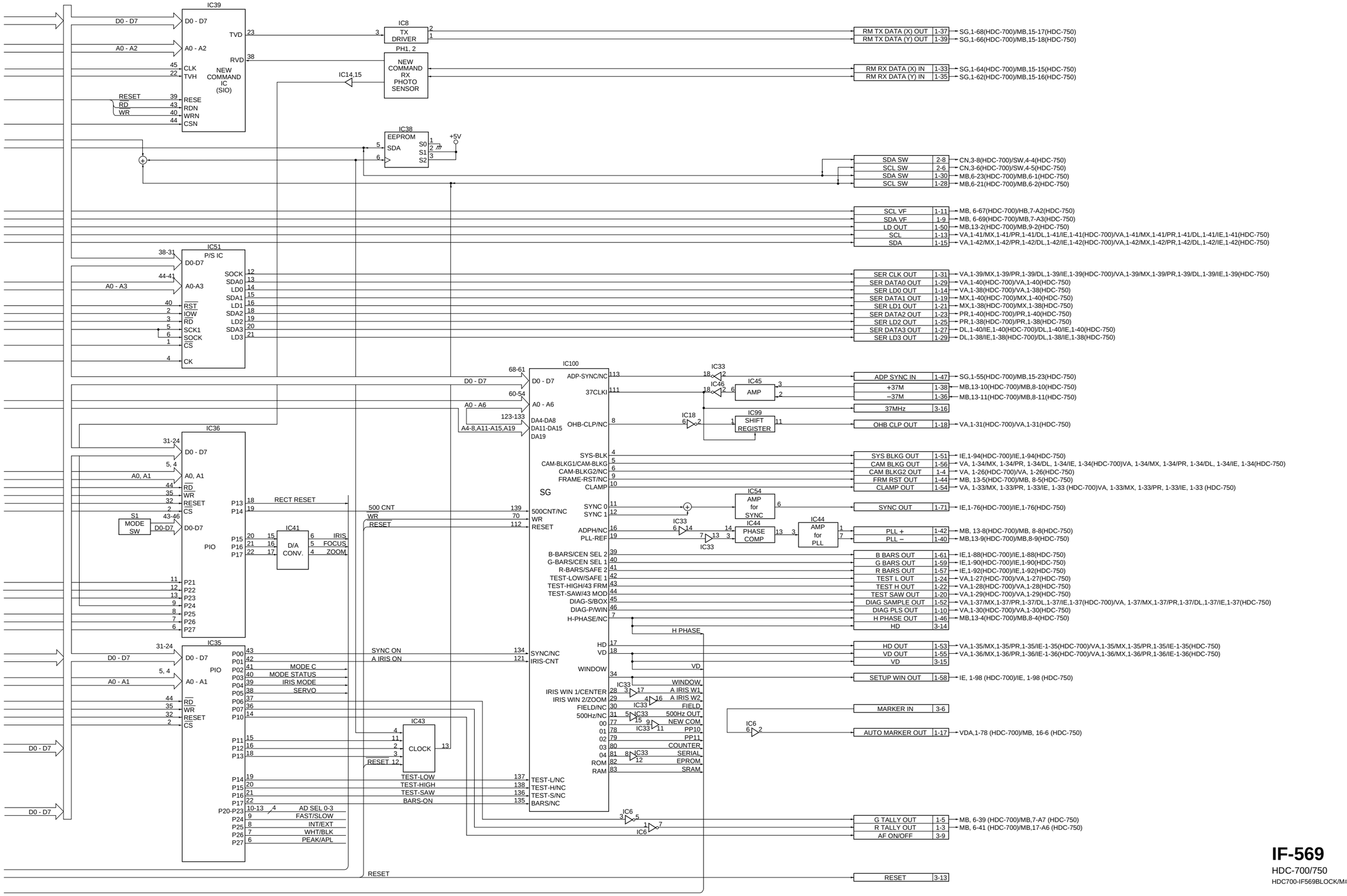

IF-569
HDC-700/750
HDC700-IF569BLOCK/M#1, #2

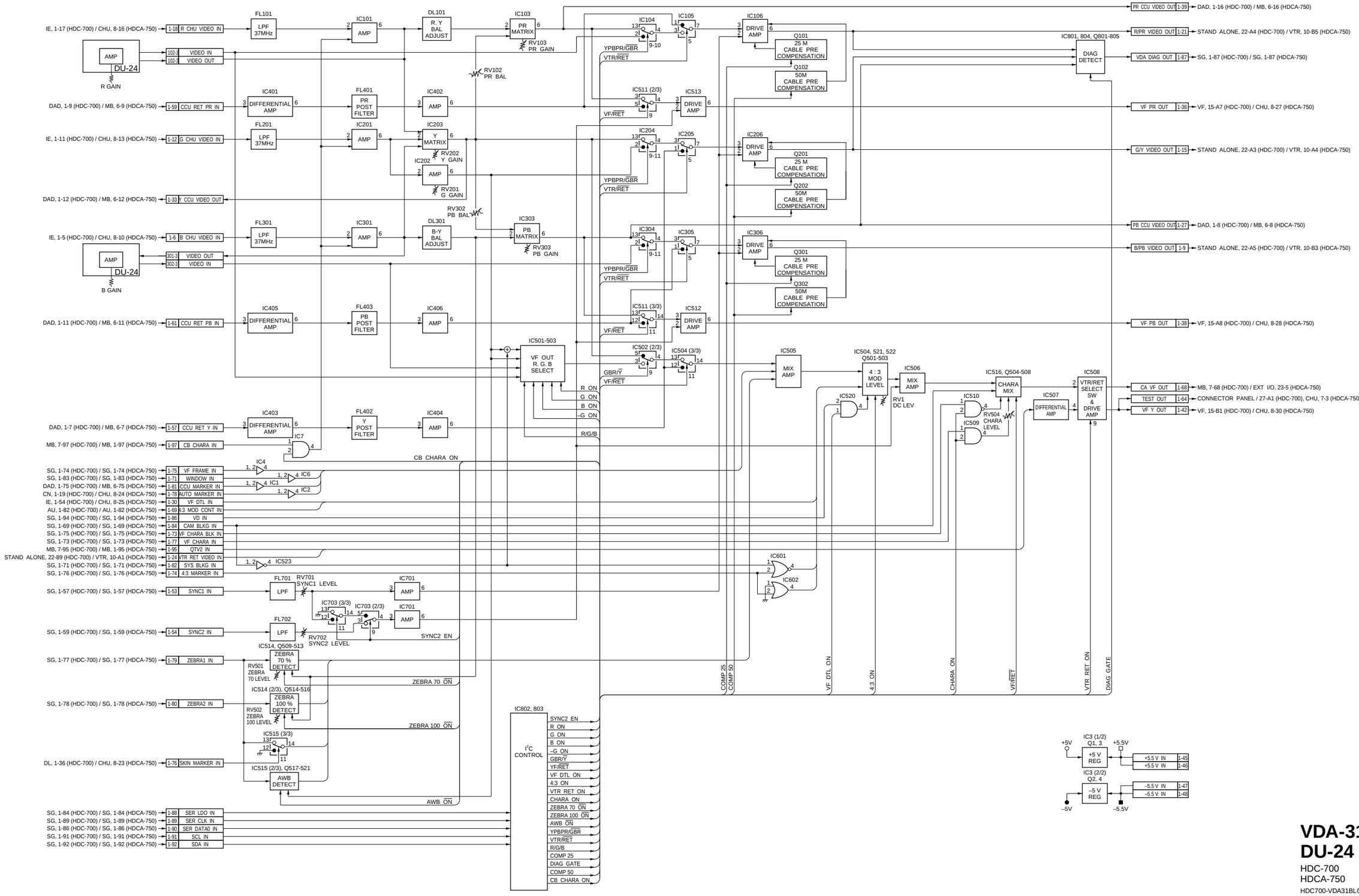

VDA-31
DU-24
HDC-700
HDCA-750
HDC700-VDA31BLOCK/M

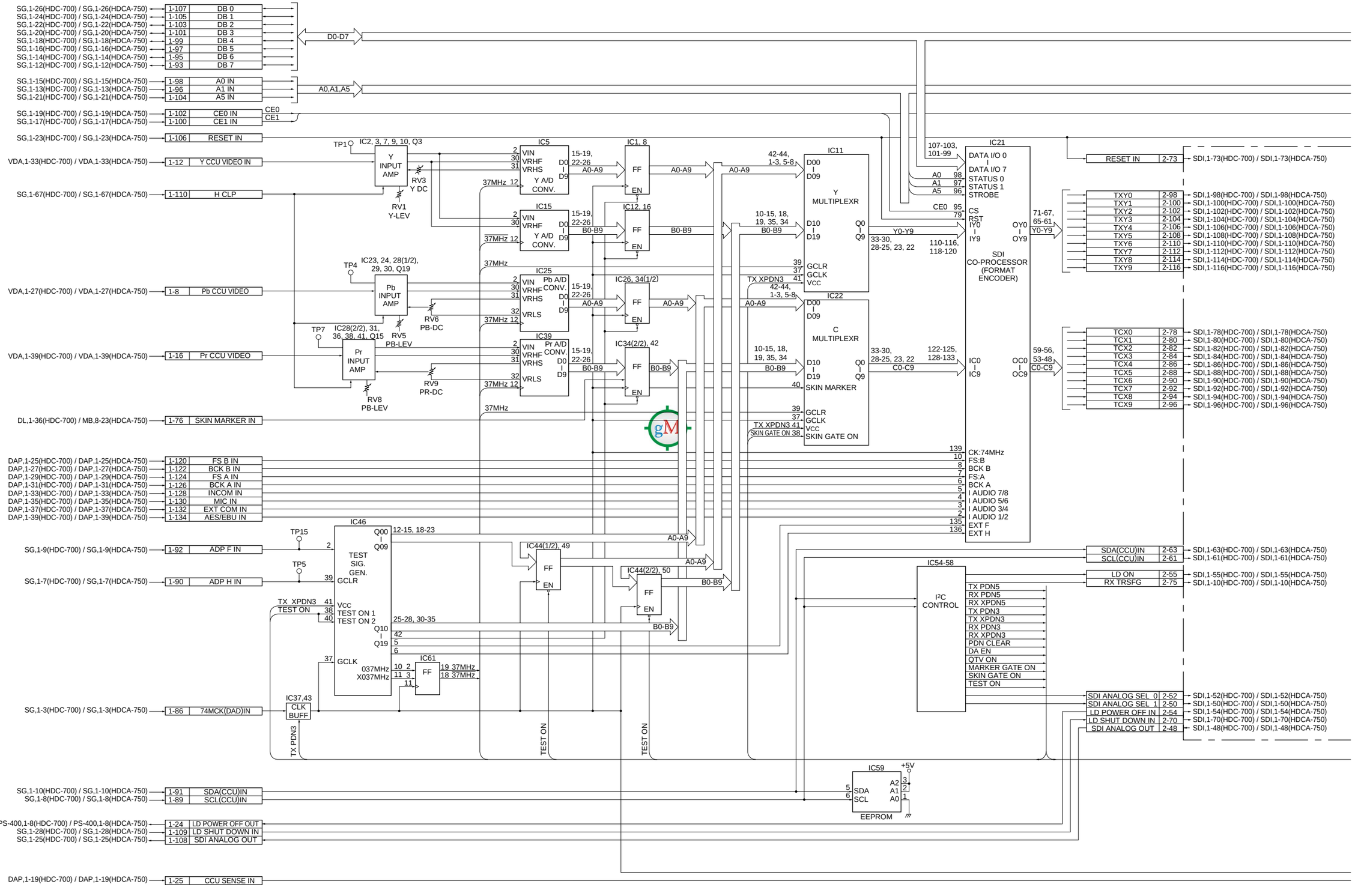
SG,1-26(HDC-700) / SG,1-26(HDCA-750) 1-107 DB 0
SG,1-24(HDC-700) / SG,1-24(HDCA-750) 1-105 DB 1
SG,1-22(HDC-700) / SG,1-22(HDCA-750) 1-103 DB 2
SG,1-20(HDC-700) / SG,1-20(HDCA-750) 1-101 DB 3
SG,1-18(HDC-700) / SG,1-18(HDCA-750) 1-99 DB 4
SG,1-16(HDC-700) / SG,1-16(HDCA-750) 1-97 DB 5
SG,1-14(HDC-700) / SG,1-14(HDCA-750) 1-95 DB 6
SG,1-12(HDC-700) / SG,1-12(HDCA-750) 1-93 DB 7
D0-D7
SG,1-15(HDC-700) / SG,1-15(HDCA-750) 1-98 A0 IN
SG,1-13(HDC-700) / SG,1-13(HDCA-750) 1-96 A1 IN
SG,1-21(HDC-700) / SG,1-21(HDCA-750) 1-104 A5 IN
A0,A1,A5
SG,1-19(HDC-700) / SG,1-19(HDCA-750) 1-102 CE0 IN
SG,1-17(HDC-700) / SG,1-17(HDCA-750) 1-100 CE1 IN
CE0
CE1
SG,1-23(HDC-700) / SG,1-23(HDCA-750) 1-106 RESET IN
VDA,1-33(HDC-700) / VDA,1-33(HDCA-750) 1-12 Y CCU VIDEO IN
SG,1-67(HDC-700) / SG,1-67(HDCA-750) 1-110 H CLP
VDA,1-27(HDC-700) / VDA,1-27(HDCA-750) 1-8 Pb CCU VIDEO
VDA,1-39(HDC-700) / VDA,1-39(HDCA-750) 1-16 Pr CCU VIDEO
DL,1-36(HDC-700) / MB,8-23(HDCA-750) 1-76 SKIN MARKER IN
DAP,1-25(HDC-700) / DAP,1-25(HDCA-750) 1-120 FS B IN
DAP,1-27(HDC-700) / DAP,1-27(HDCA-750) 1-122 BCK B IN
DAP,1-29(HDC-700) / DAP,1-29(HDCA-750) 1-124 FS A IN
DAP,1-31(HDC-700) / DAP,1-31(HDCA-750) 1-126 BCK A IN
DAP,1-33(HDC-700) / DAP,1-33(HDCA-750) 1-128 INCOM IN
DAP,1-35(HDC-700) / DAP,1-35(HDCA-750) 1-130 MIC IN
DAP,1-37(HDC-700) / DAP,1-37(HDCA-750) 1-132 EXT COM IN
DAP,1-39(HDC-700) / DAP,1-39(HDCA-750) 1-134 AES/EBU IN
SG,1-9(HDC-700) / SG,1-9(HDCA-750) 1-92 ADP F IN
SG,1-7(HDC-700) / SG,1-7(HDCA-750) 1-90 ADP H IN
SG,1-3(HDC-700) / SG,1-3(HDCA-750) 1-86 74MCK(DAD)IN
SG,1-10(HDC-700) / SG,1-10(HDCA-750) 1-91 SDA(CCU)IN
SG,1-8(HDC-700) / SG,1-8(HDCA-750) 1-89 SCL(CCU)IN
PS-400,1-8(HDC-700) / PS-400,1-8(HDCA-750) 1-24 LD POWER OFF OUT
SG,1-28(HDC-700) / SG,1-28(HDCA-750) 1-109 LD SHUT DOWN IN
SG,1-25(HDC-700) / SG,1-25(HDCA-750) 1-108 SDI ANALOG OUT
DAP,1-19(HDC-700) / DAP,1-19(HDCA-750) 1-25 CCU SENSE IN
TP1
IC2, 3, 7, 9, 10, Q3
Y INPUT AMP
RV3 Y DC
RV1 Y-LEV
TP4
IC23, 24, 28(1/2), 29, 30, Q19
Pb INPUT AMP
RV6 PB-DC
RV5 PB-LEV
TP7
IC28(2/2), 31, 36, 38, 41, Q15
Pr INPUT AMP
RV9 PR-DC
RV8 PB-LEV
IC5
IC15
IC25
IC39
VIN
VRHF
VRHS
VRLS
Y A/D CONV.
Pb A/D CONV.
Pr A/D CONV.
37MHz 12
37MHz
15-19, 22-26
A0-A9
B0-B9
IC1, 8
IC12, 16
IC26, 34(1/2)
IC34(2/2), 42
FF
EN
IC11
IC22
Y MULTIPLEXR
C MULTIPLEXR
D00 D09
D10 D19
Q0 Q9
42-44, 1-3, 5-8
10-15, 18, 19, 35, 34
GCLR
GCLK
VCC
TX XPDN3 41
SKIN MARKER 40
SKIN GATE ON 38
33-30, 28-25, 23, 22
Y0-Y9
C0-C9
110-116, 118-120
122-125, 128-133
IC21
DATA I/O 0
DATA I/O 7
STATUS 0
STATUS 1
STROBE
CS
RST
IY0
IY9
SDI CO-PROCESSOR (FORMAT ENCODER)
IC0
IC9
OY0
OY9
OC0
OC9
71-67, 65-61
59-56, 53-48
107-103, 101-99
A0 98
A1 97
A5 96
CE0 95
79
CK:74MHz
FS:B
BCK B
FS:A
BCK A
I AUDIO 7/8
I AUDIO 5/6
I AUDIO 3/4
I AUDIO 1/2
EXT F
EXT H
RESET IN 2-73
TXY0 2-98
TXY1 2-100
TXY2 2-102
TXY3 2-104
TXY4 2-106
TXY5 2-108
TXY6 2-110
TXY7 2-112
TXY8 2-114
TXY9 2-116
TCX0 2-78
TCX1 2-80
TCX2 2-82
TCX3 2-84
TCX4 2-86
TCX5 2-88
TCX6 2-90
TCX7 2-92
TCX8 2-94
TCX9 2-96
SDI,1-73(HDC-700) / SDI,1-73(HDCA-750)
SDI,1-98(HDC-700) / SDI,1-98(HDCA-750)
SDI,1-100(HDC-700) / SDI,1-100(HDCA-750)
SDI,1-102(HDC-700) / SDI,1-102(HDCA-750)
SDI,1-104(HDC-700) / SDI,1-104(HDCA-750)
SDI,1-106(HDC-700) / SDI,1-106(HDCA-750)
SDI,1-108(HDC-700) / SDI,1-108(HDCA-750)
SDI,1-110(HDC-700) / SDI,1-110(HDCA-750)
SDI,1-112(HDC-700) / SDI,1-112(HDCA-750)
SDI,1-114(HDC-700) / SDI,1-114(HDCA-750)
SDI,1-116(HDC-700) / SDI,1-116(HDCA-750)
SDI,1-78(HDC-700) / SDI,1-78(HDCA-750)
SDI,1-80(HDC-700) / SDI,1-80(HDCA-750)
SDI,1-82(HDC-700) / SDI,1-82(HDCA-750)
SDI,1-84(HDC-700) / SDI,1-84(HDCA-750)
SDI,1-86(HDC-700) / SDI,1-86(HDCA-750)
SDI,1-88(HDC-700) / SDI,1-88(HDCA-750)
SDI,1-90(HDC-700) / SDI,1-90(HDCA-750)
SDI,1-92(HDC-700) / SDI,1-92(HDCA-750)
SDI,1-94(HDC-700) / SDI,1-94(HDCA-750)
SDI,1-96(HDC-700) / SDI,1-96(HDCA-750)
IC46
TEST SIG. GEN.
Q00 Q09
Q10 Q19
GCLK
TEST ON 1
TEST ON 2
TX_XPDN3 41
TEST ON 38
12-15, 18-23
25-28, 30-35
IC44(1/2), 49
IC44(2/2), 50
IC61
037MHz
X037MHz
IC37,43
CLK BUFF
TX PDN3
TEST ON
IC54-58
I²C CONTROL
TX PDN5
RX PDN5
RX XPDN5
TX PDN3
TX XPDN3
RX PDN3
RX XPDN3
PDN CLEAR
DA EN
QTV ON
MARKER GATE ON
SKIN GATE ON
TEST ON
SDA(CCU)IN 2-63
SCL(CCU)IN 2-61
LD ON 2-55
RX TRSFG 2-75
SDI ANALOG SEL_0 2-52
SDI ANALOG SEL_1 2-50
LD POWER OFF IN 2-54
LD SHUT DOWN IN 2-70
SDI ANALOG OUT 2-48
SDI,1-63(HDC-700) / SDI,1-63(HDCA-750)
SDI,1-61(HDC-700) / SDI,1-61(HDCA-750)
SDI,1-55(HDC-700) / SDI,1-55(HDCA-750)
SDI,1-10(HDC-700) / SDI,1-10(HDCA-750)
SDI,1-52(HDC-700) / SDI,1-52(HDCA-750)
SDI,1-50(HDC-700) / SDI,1-50(HDCA-750)
SDI,1-54(HDC-700) / SDI,1-54(HDCA-750)
SDI,1-70(HDC-700) / SDI,1-70(HDCA-750)
SDI,1-48(HDC-700) / SDI,1-48(HDCA-750)
IC59
EEPROM
+5V
SDA
SCL
A2
A1
A0

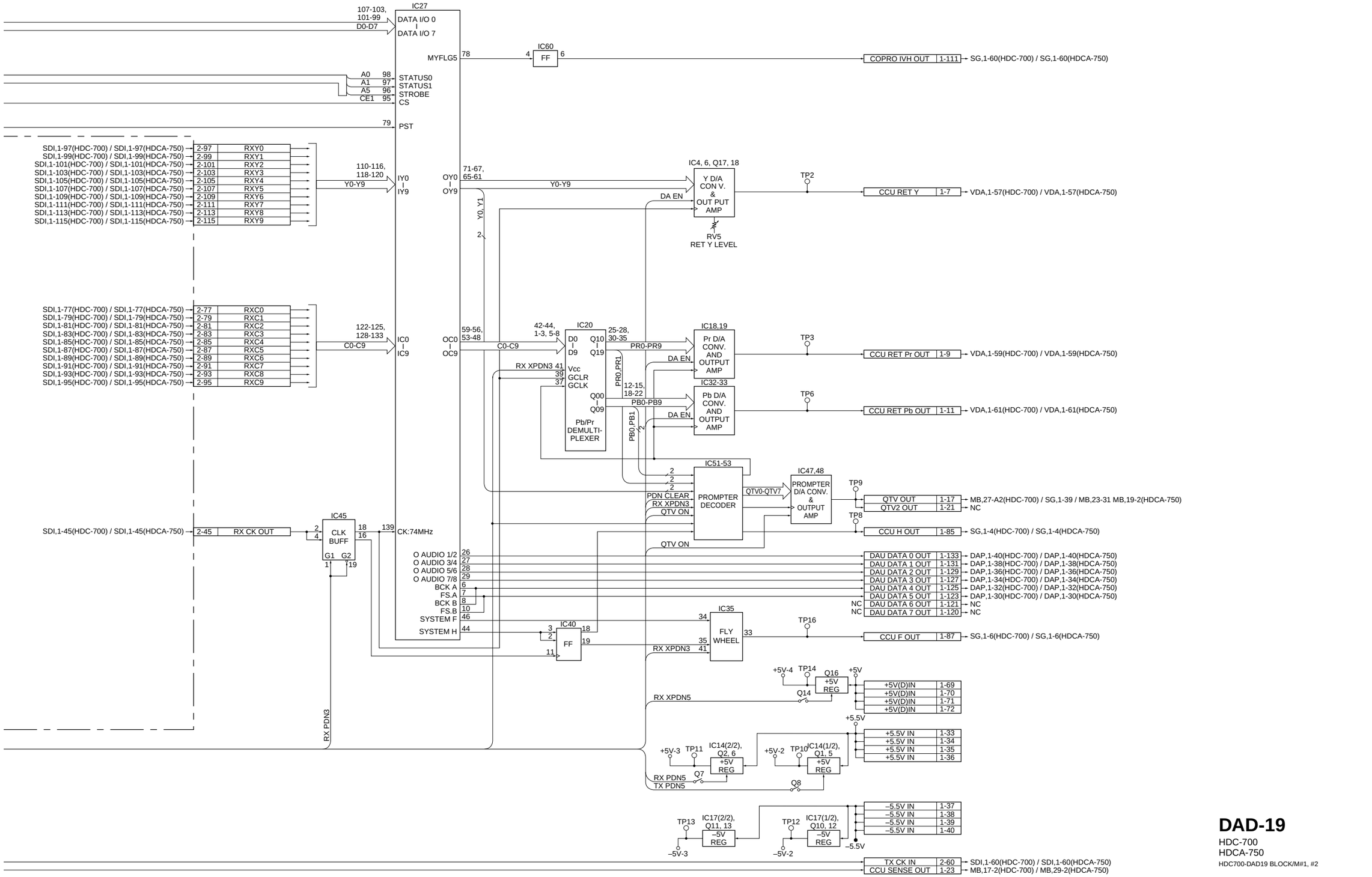

DAD-19
HDC-700
HDCA-750
HDC700-DAD19 BLOCK/M#1, #2

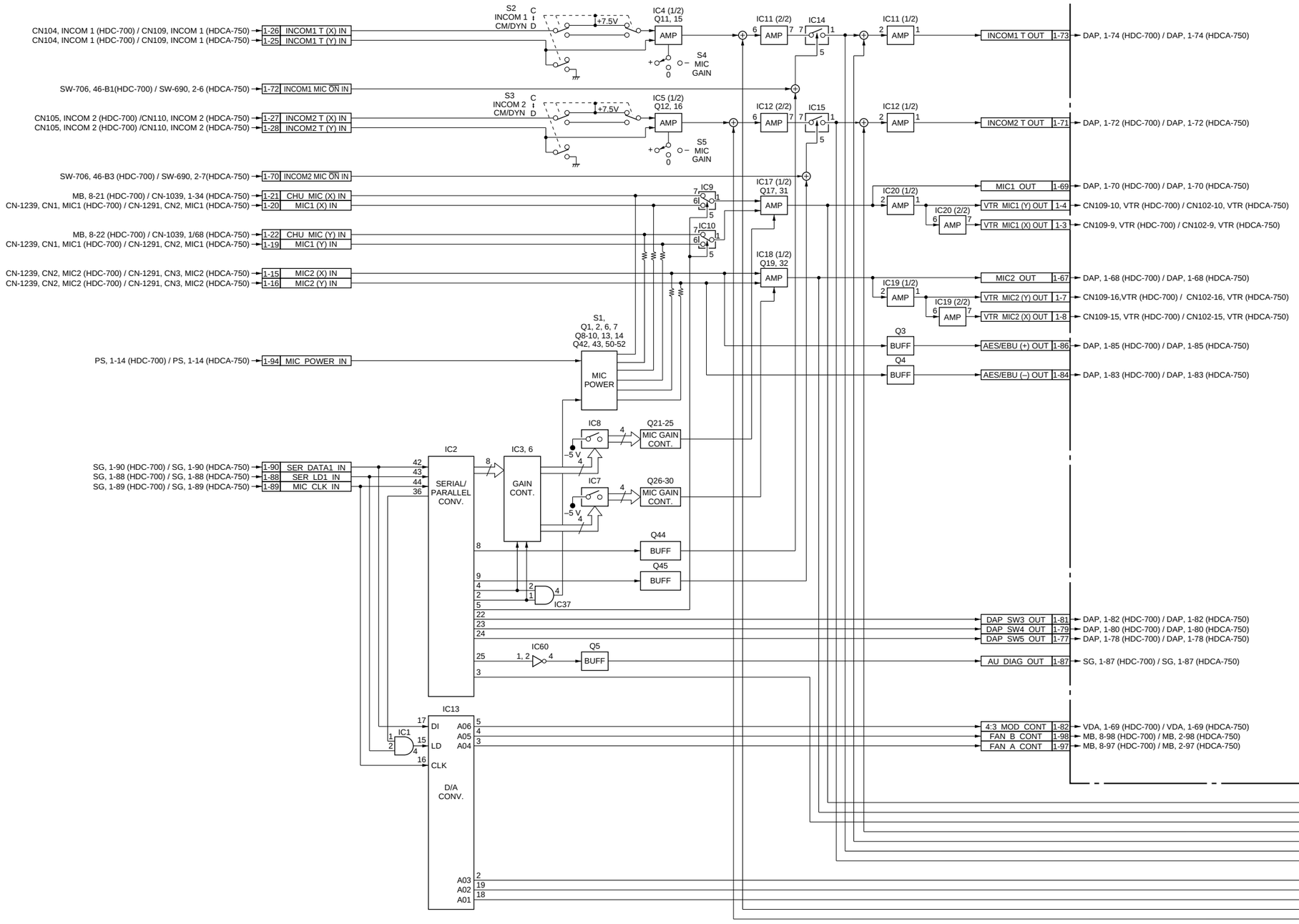
CN104, INCOM 1 (HDC-700) / CN109, INCOM 1 (HDCA-750)
1-26 INCOM1 T (X) IN
CN104, INCOM 1 (HDC-700) / CN109, INCOM 1 (HDCA-750)
1-25 INCOM1 T (Y) IN
S2 INCOM 1 CM/DYN C D
+7.5V
IC4 (1/2) Q11, 15
AMP
S4 MIC GAIN
IC11 (2/2)
IC14
IC11 (1/2)
INCOM1 T OUT 1-73
DAP, 1-74 (HDC-700) / DAP, 1-74 (HDCA-750)
SW-706, 46-B1(HDC-700) / SW-690, 2-6 (HDCA-750)
1-72 INCOM1 MIC ON IN
CN105, INCOM 2 (HDC-700) /CN110, INCOM 2 (HDCA-750)
1-27 INCOM2 T (X) IN
CN105, INCOM 2 (HDC-700) /CN110, INCOM 2 (HDCA-750)
1-28 INCOM2 T (Y) IN
S3 INCOM 2 CM/DYN C D
IC5 (1/2) Q12, 16
S5 MIC GAIN
IC12 (2/2)
IC15
IC12 (1/2)
INCOM2 T OUT 1-71
DAP, 1-72 (HDC-700) / DAP, 1-72 (HDCA-750)
SW-706, 46-B3 (HDC-700) / SW-690, 2-7(HDCA-750)
1-70 INCOM2 MIC ON IN
MB, 8-21 (HDC-700) / CN-1039, 1-34 (HDCA-750)
1-21 CHU_MIC (X) IN
CN-1239, CN1, MIC1 (HDC-700) / CN-1291, CN2, MIC1 (HDCA-750)
1-20 MIC1 (X) IN
IC9
IC17 (1/2) Q17, 31
IC20 (1/2)
MIC1 OUT 1-69
DAP, 1-70 (HDC-700) / DAP, 1-70 (HDCA-750)
IC20 (2/2)
VTR MIC1 (Y) OUT 1-4
CN109-10, VTR (HDC-700) / CN102-10, VTR (HDCA-750)
VTR MIC1 (X) OUT 1-3
CN109-9, VTR (HDC-700) / CN102-9, VTR (HDCA-750)
MB, 8-22 (HDC-700) / CN-1039, 1/68 (HDCA-750)
1-22 CHU_MIC (Y) IN
CN-1239, CN1, MIC1 (HDC-700) / CN-1291, CN2, MIC1 (HDCA-750)
1-19 MIC1 (Y) IN
IC10
CN-1239, CN2, MIC2 (HDC-700) / CN-1291, CN3, MIC2 (HDCA-750)
1-15 MIC2 (X) IN
CN-1239, CN2, MIC2 (HDC-700) / CN-1291, CN3, MIC2 (HDCA-750)
1-16 MIC2 (Y) IN
IC18 (1/2) Q19, 32
MIC2 OUT 1-67
DAP, 1-68 (HDC-700) / DAP, 1-68 (HDCA-750)
IC19 (1/2)
IC19 (2/2)
VTR MIC2 (Y) OUT 1-7
CN109-16,VTR (HDC-700) / CN102-16, VTR (HDCA-750)
VTR MIC2 (X) OUT 1-8
CN109-15, VTR (HDC-700) / CN102-15, VTR (HDCA-750)
S1, Q1, 2, 6, 7 Q8-10, 13, 14 Q42, 43, 50-52
PS, 1-14 (HDC-700) / PS, 1-14 (HDCA-750)
1-94 MIC_POWER_IN
MIC POWER
Q3
BUFF
AES/EBU (+) OUT 1-86
DAP, 1-85 (HDC-700) / DAP, 1-85 (HDCA-750)
Q4
AES/EBU (–) OUT 1-84
DAP, 1-83 (HDC-700) / DAP, 1-83 (HDCA-750)
IC8
Q21-25
MIC GAIN CONT.
–5 V
IC7
Q26-30
SG, 1-90 (HDC-700) / SG, 1-90 (HDCA-750)
1-90 SER_DATA1_IN
SG, 1-88 (HDC-700) / SG, 1-88 (HDCA-750)
1-88 SER_LD1_IN
SG, 1-89 (HDC-700) / SG, 1-89 (HDCA-750)
1-89 MIC_CLK_IN
IC2
SERIAL/ PARALLEL CONV.
IC3, 6
GAIN CONT.
Q44
BUFF
Q45
IC37
DAP_SW3_OUT 1-81
DAP, 1-82 (HDC-700) / DAP, 1-82 (HDCA-750)
DAP_SW4_OUT 1-79
DAP, 1-80 (HDC-700) / DAP, 1-80 (HDCA-750)
DAP_SW5_OUT 1-77
DAP, 1-78 (HDC-700) / DAP, 1-78 (HDCA-750)
IC60
Q5
AU_DIAG_OUT 1-87
SG, 1-87 (HDC-700) / SG, 1-87 (HDCA-750)
IC13
IC1
DI
LD
CLK
D/A CONV.
A06
A05
A04
A03
A02
A01
4:3_MOD_CONT 1-82
VDA, 1-69 (HDC-700) / VDA, 1-69 (HDCA-750)
FAN_B_CONT 1-98
MB, 8-98 (HDC-700) / MB, 2-98 (HDCA-750)
FAN_A_CONT 1-97
MB, 8-97 (HDC-700) / MB, 2-97 (HDCA-750)

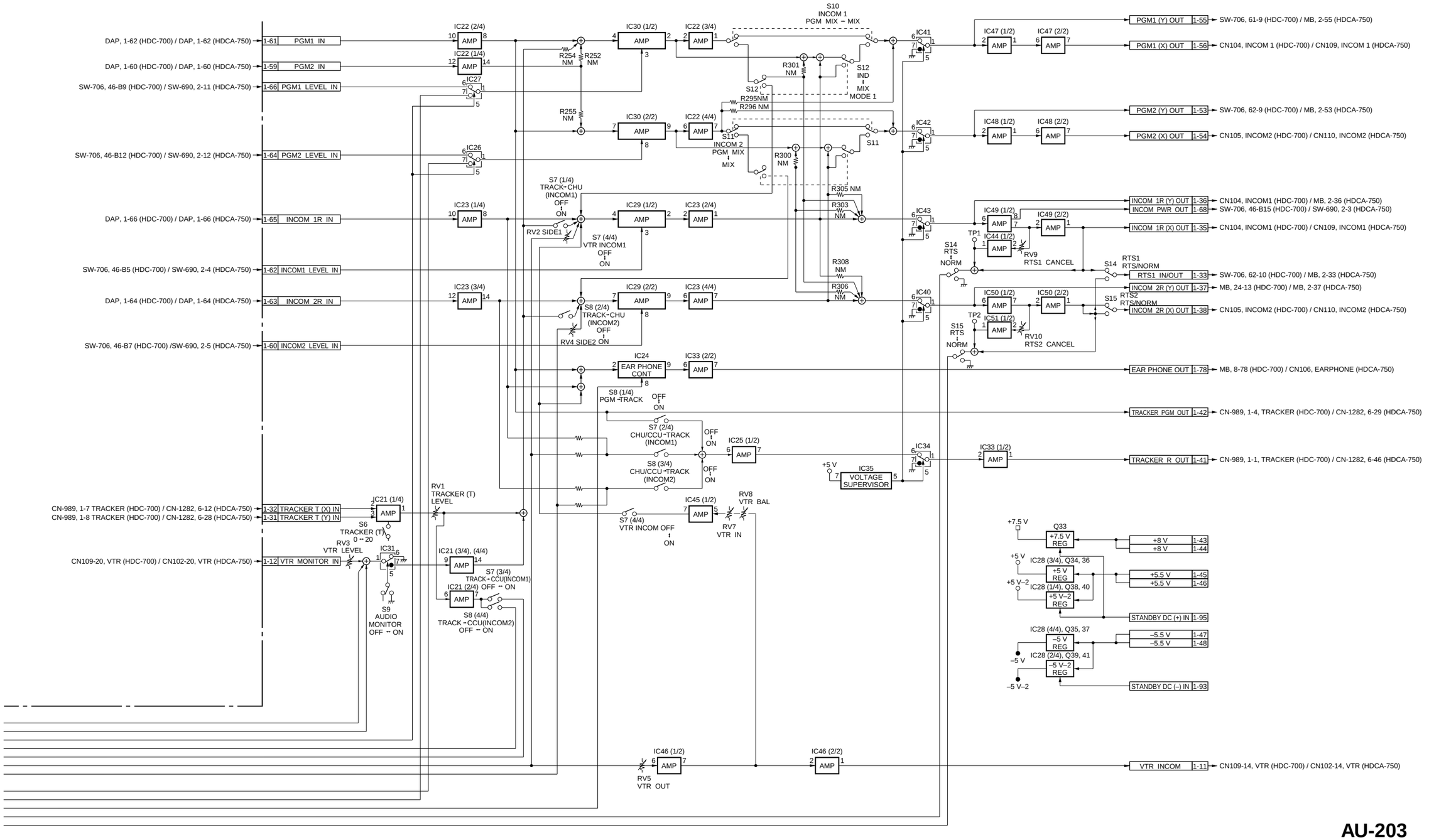

AU-203

HDC-700
HDCA-750

HDC700-AU203BLOCK/M#1, #2

http://getMANUAL.com

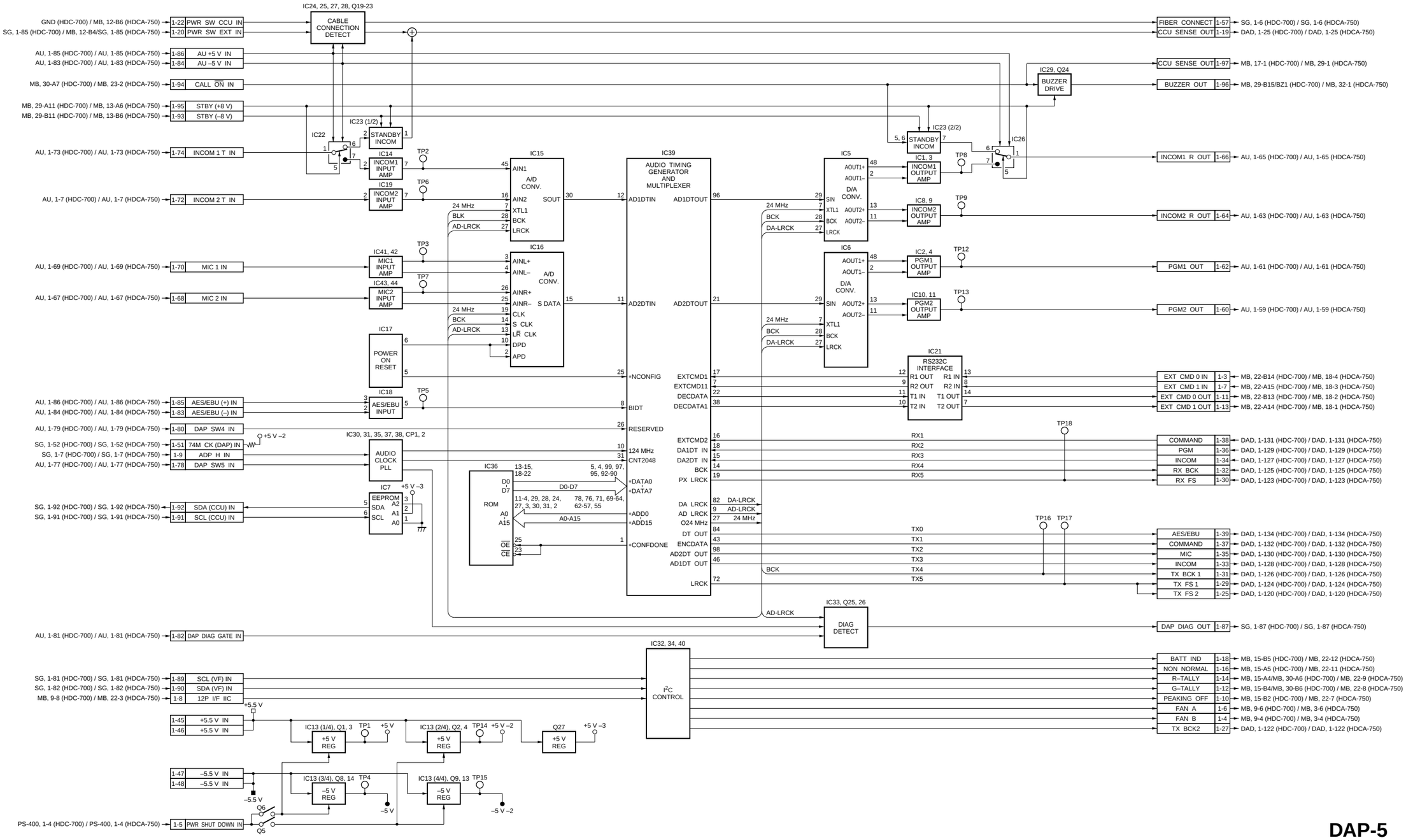

DAP-5
HDC-700
HDCA-750
HDC700-DAP5BLOCK/M

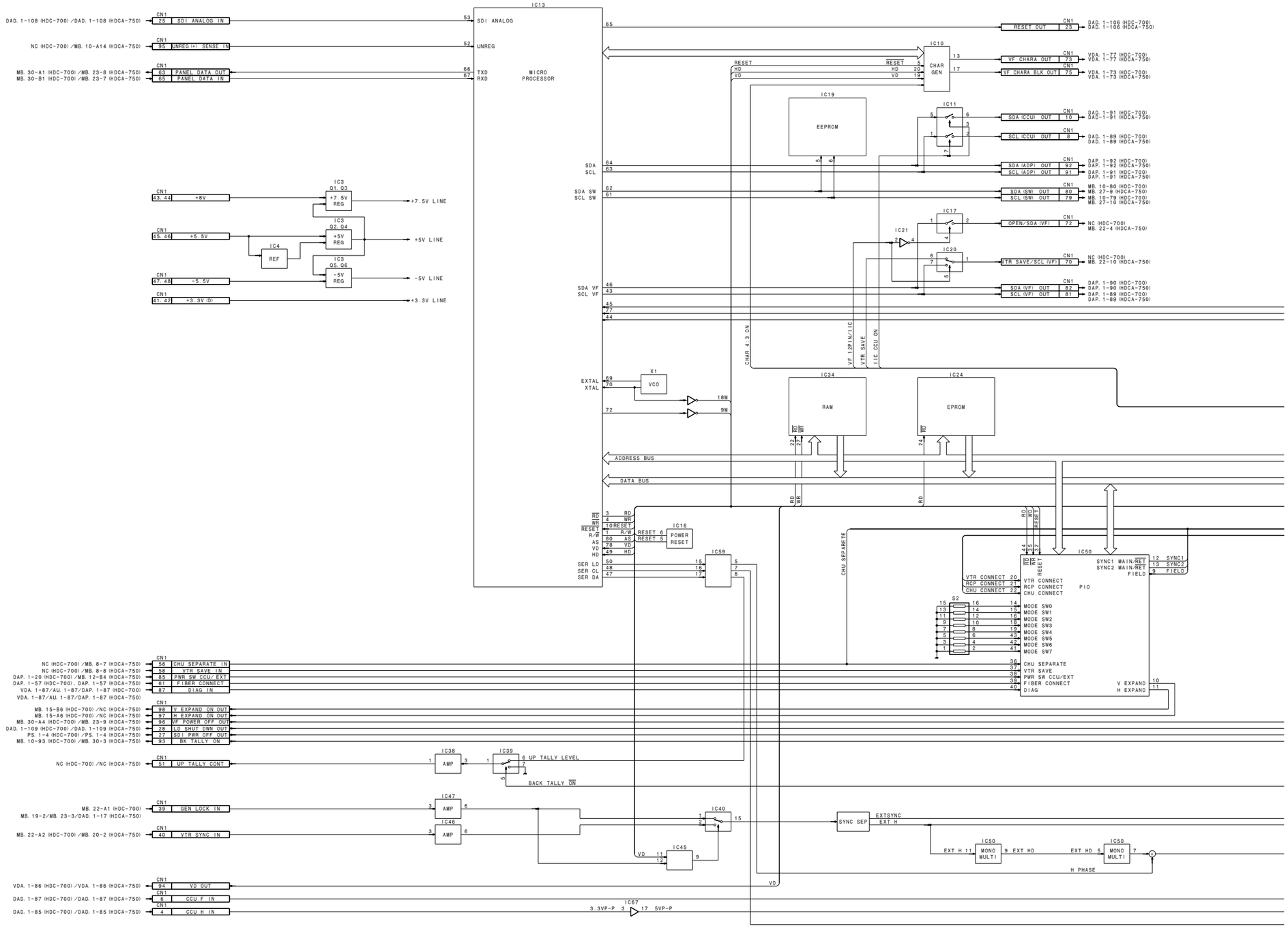
IC13
MICRO PROCESSOR
SDI ANALOG
UNREG
TXD
RXD
DAD. 1-108 (HDC-700) /DAD. 1-108 (HDCA-750)
NC (HDC-700) /MB. 10-A14 (HDCA-750)
MB. 30-A1 (HDC-700) /MB. 23-8 (HDCA-750)
MB. 30-B1 (HDC-700) /MB. 23-7 (HDCA-750)
SDI ANALOG IN
UNREG (+) SENSE IN
PANEL DATA OUT
PANEL DATA IN
+8V
+5.5V
-5.5V
+3.3V (D)
+7.5V LINE
+5V LINE
-5V LINE
+3.3V LINE
REF
EEPROM
RESET OUT
VF CHARA OUT
VF CHARA BLK OUT
SDA (CCU) OUT
SCL (CCU) OUT
SDA (ADP) OUT
SCL (ADP) OUT
SDA (SW) OUT
SCL (SW) OUT
OPEN/SDA (VF)
VTR SAVE/SCL (VF)
SDA (VF) OUT
SCL (VF) OUT
CHAR GEN
RAM
EPROM
VCO
ADDRESS BUS
DATA BUS
POWER RESET
SYNC SEP
MONO MULTI
AMP
UP TALLY LEVEL
BACK TALLY ON
GEN LOCK IN
VTR SYNC IN
VD OUT
CCU F IN
CCU H IN
CHU SEPARATE IN
VTR SAVE IN
PWR SW CCU/EXT
FIBER CONNECT
DIAG IN
V EXPAND ON OUT
H EXPAND ON OUT
VF POWER OFF OUT
LD SHUT DWN OUT
SD PWR OFF OUT
BK TALLY ON
UP TALLY CONT
SYNC1 MAIN/RET
SYNC2 MAIN/RET
FIELD
VTR CONNECT
RCP CONNECT
CHU CONNECT
PIO
MODE SW0
MODE SW1
MODE SW2
MODE SW3
MODE SW4
MODE SW5
MODE SW6
MODE SW7
CHU SEPARATE
VTR SAVE
PWR SW CCU/EXT
FIBER CONNECT
DIAG
V EXPAND
H EXPAND
EXTSYNC
EXT H
EXT HD
H PHASE
CHAR 4.3 ON
VF 12P-IN/I/C
VTR SAVE
I/C CCU ON
CHU SEPARATE

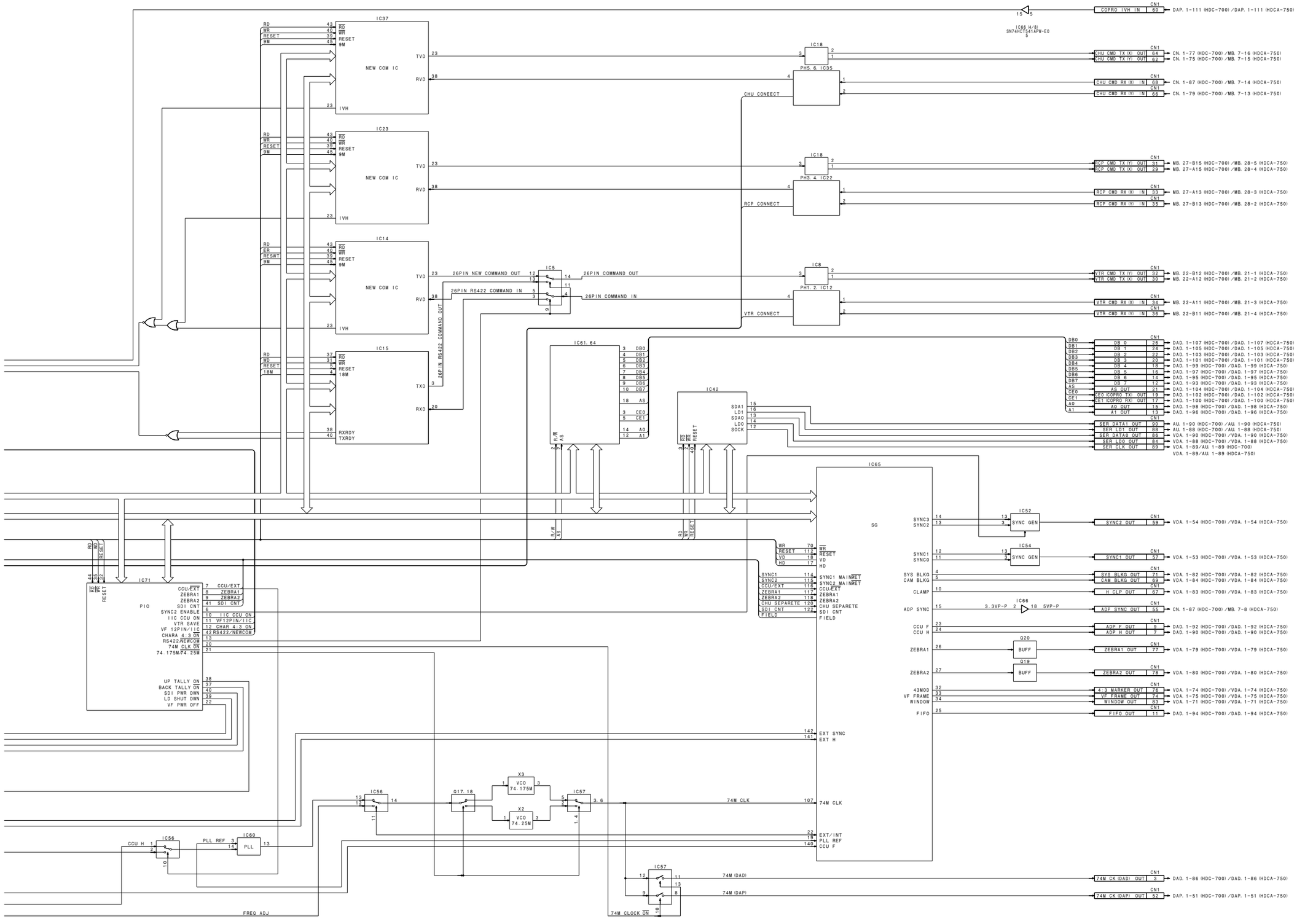

SG-226
HDC-700
HDCA-750
HDC700-SG226BLOCK/M

Section 4
Board Layouts

VA-158 (1-660-228-14)

CN1	F1	C316	*E6	C735	*K2	Q4	C1	R43	*A3	R137	D2	R355	*E2	R704	*J7
		C317	*E4	C736	*L1	Q5	*L1	R44	*B3	R138	D2	R356	E1	R705	*K7
C1	*E1	C318	*E4	C737	*L1	Q6	*K1	R45	*A6	R139	D2	R357	*E1	R706	K6
C2	*F1	C319	E4	C738	*C3	Q7	*K1	R46	*D4	R140	D2	R358	*E1	R707	*K7
C3	*C1	C320	*F3			Q8	*L1	R47	*D4	R141	D2	R359	*E2	R708	J6
C4	*E1	C321	*E4	D1	*D1	Q9	*J1	R48	*D4	R142	D2	R360	*F2	R709	*K6
C5	*A4	C322	*F3			Q10	*D2	R49	*D4	R143	D2	R361	*F2	R710	*K6
C6	*B4	C323	*E3	E1	A7	Q11	*D2	R50	*C4	R144	D2	R362	*E3	R711	*K6
C7	*B4	C324	*E3			Q12	*D2	R51	*C4	R145	*C1	R363	*E2	R712	*L5
C8	*A4	C325	*E1	FL300	F5	Q13	*D2	R52	*D4	R146	C2	R364	E3	R713	*L6
C9	*A4	C326	*E2	FL301	E5	Q14	*D2	R53	*D4	R147	C2	R365	*E2	R714	*L6
C10	*B4	C327	*E2	FL500	H5	Q15	*D2	R54	*C3	R148	C1	R366	E3	R715	*L5
C11	*A4	C328	E3	FL501	G5	Q16	*A2	R55	*C4	R149	C1	R367	*F2	R716	*L4
C12	*B4	C329	E3	FL700	L5	Q17	*A2	R56	*D4	R150	*C2	R368	E4	R717	K5
C13	C1	C330	E3	FL701	J5	Q18	*A2	R57	*D4	R151	*C2	R369	*F2	R718	*K7
C14	C1	C331	F3			Q300	*F5	R58	D5	R152	*C2	R370	*F2	R719	*K7
C15	*C1	C332	*F2	IC1	D3	Q301	*F6	R59	*D5	R153	*C2	R371	*F2	R720	J6
C16	*C1	C333	*F1	IC2	*D1	Q302	*F5	R60	*D6	R154	*C2	R372	*F2	R721	*J6
C17	*A4	C334	*F2	IC3	*E1	Q303	*E7	R61	*A6	R155	*C2	R373	*F2	R722	*J5
C18	*B4	C335	*E2	IC4	*E1	Q304	*E6	R62	*C5	R156	*C2	R374	*F1	R723	*J5
C19	*A4	C336	*F1	IC5	*C1	Q305	*E5	R63	*A6	R157	*C2	R500	*G7	R724	*J6
C20	*B4	C337	*F1	IC6	A4	Q306	*E4	R64	*C5	R158	*C2	R501	*G7	R725	*J5
C21	*C4	C500	*F7	IC7	A3	Q307	*F4	R65	*C5	R159	*C3	R502	*G7	R726	*J5
C22	*C3	C501	*G7	IC8	B4	Q308	*E4	R66	*A6	R160	*C3	R503	*G7	R727	*J5
C23	*C4	C502	*G6	IC9	B3	Q309	*F3	R67	*A6	R161	*C3	R504	*G7	R728	*J5
C24	*D4	C503	*G7	IC10	C4	Q310	*E2	R68	*A6	R162	*D1	R505	*G7	R729	*K5
C25	*C5	C504	*G7	IC11	D4	Q500	*H5	R69	*A6	R163	*B2	R506	G6	R730	*J4
C26	*C4	C505	G7	IC12	A5	Q501	*H6	R70	*B5	R164	*A2	R507	*G7	R731	*K6
C27	*C4	C506	H7	IC13	B5	Q502	*H5	R71	*D5	R165	*A2	R508	G6	R732	*K5
C28	*D4	C507	*H7	IC14	A6	Q503	*G7	R72	*C5	R166	*A2	R509	*G6	R733	*K5
C29	*B6	C508	*H7	IC15	B6	Q504	*G6	R73	*C4	R167	*A2	R510	*G6	R734	*J4
C30	*D4	C509	*H6	IC16	D5	Q506	*G4	R74	*B7	R168	*A2	R511	*G6	R735	*J4
C31	*D3	C510	*G6	IC17	C5	Q507	*H4	R75	*B5	R169	*A2	R512	*H5	R736	*J4
C32	*A4	C511	*H6	IC18	A7	Q508	*G4	R76	*D5	R170	*D1	R513	*H6	R737	*K3
C33	*B4	C513	*G6	IC19	B7	Q509	*H3	R77	*C5	R171	*E1	R514	*H6	R738	*L3
C34	*C4	C514	*G5	IC20	C7	Q510	*G2	R78	*C5	R172	*E1	R515	*H5	R739	*K3
C35	*C4	C515	*G5	IC21	C6	Q700	*L5	R79	*B7	R173	*E1	R516	*H4	R740	*K3
C36	*D4	C516	*H6	IC22	D7	Q701	*L6	R80	*B5	R174	*E1	R517	G5	R741	*K3
C37	*C3	C517	*G4	IC23	D6	Q702	*L5	R81	*D5	R175	*E1	R518	*G7	R742	*L3
C38	*C5	C518	*G4	IC24	D7	Q703	*J7	R82	*C5	R300	*E7	R519	*G7	R743	*L3
C39	D5	C519	G4	IC25	D6	Q704	*J6	R83	*A5	R301	*E7	R520	G6	R744	*L4
C40	*A6	C520	*H3	IC26	*L1	Q705	*J5	R84	*B7	R302	*E7	R521	*G6	R745	*L4
C41	C5	C521	*G4	IC27	L1	Q706	*K4	R85	*B5	R303	*E7	R522	*G5	R746	*K4
C42	*A6	C522	*H3	IC28	*J1	Q707	*L4	R86	*D5	R304	*E7	R528	*G5	R747	*K3
C43	*A6	C523	*G3	IC29	J1	Q708	*K4	R87	*C5	R305	*E7	R529	*G5	R748	*L3
C44	*A6	C524	*G3	IC30	*C2	Q709	*L3	R88	*C5	R306	E6	R530	*G4	R749	*J3
C45	*D5	C525	*G1	IC31	D2	Q710	*K2	R89	*B6	R307	*E7	R531	*H6	R750	*J3
C46	*D6	C526	*G2	IC32	*C1			R90	*B6	R308	E6	R532	*G5	R751	*K1
C47	*A6	C527	*G2	IC33	C2	RV300	E7	R91	*D5	R309	*E6	R533	*G5	R752	*J1
C48	*C7	C528	G3	IC34	C3	RV500	G7	R92	*C5	R310	*E6	R534	*G4	R753	*J1
C49	*B7	C529	G3	IC35	*D2	RV700	K7	R93	*C4	R311	*E6	R535	*G4	R754	*J2
C50	*C7	C530	G3	IC36	*B1			R94	*B6	R312	*F5	R536	*G4	R755	*J2
C51	*C6	C531	H3	IC37	*A1	R1	*F1	R95	*B5	R313	*F6	R537	*G3	R756	J1
C52	*B6	C532	*H2	IC38	*A1	R2	*E1	R96	*D5	R314	*F6	R538	*H3	R757	*K1
C53	*C6	C533	*H1	IC39	*A1	R3	*E1	R97	*C5	R315	*F5	R539	*G3	R758	*K1
C54	*A7	C534	*H2	IC40	*A1	R4	*E1	R98	*B5	R316	*F4	R540	*G3	R759	*J2
C55	*C7	C535	*G2	IC41	*A1	R5	*E1	R99	*B6	R317	E5	R541	*G3	R760	*L2
C56	*C7	C536	*H1	IC42	*B1	R6	*F1	R100	*A7	R318	*E7	R542	*H3	R761	*L2
C57	*C6	C537	*H1	IC43	A1	R7	*C1	R101	*A7	R319	*E7	R543	*H3	R762	*K3
C58	*C7	C700	*H7	IC300	E7	R8	*E1	R102	*A5	R320	E6	R544	*H4	R763	*K2
C59	*A7	C701	*K7	IC301	E6	R9	*F1	R103	*A5	R321	*E6	R545	*H4	R764	J3
C60	*A7	C702	*K6	IC302	*E7	R10	*C1	R104	*A5	R322	*E5	R546	*G4	R765	*K2
C61	*A7	C703	*K7	IC303	E6	R11	*E1	R105	*A5	R323	*E5	R547	*G3	R766	J3
C62	*A7	C704	*K7	IC304	*G5	R12	*E1	R106	*A5	R324	*E6	R548	*H3	R767	*L2
C63	*D7	C705	J7	IC305	*E5	R13	*C1	R107	*A5	R325	*E5	R549	*G3	R768	J4
C64	*D7	C706	L7	IC306	E4	R14	*C1	R108	*C7	R326	*E5	R550	*G3	R769	*L2
C65	*K1	C707	*K7	IC307	*F4	R15	*C1	R109	*C7	R327	*E5	R551	*G1	R770	*L2
C66	*J1	C708	*K7	IC308	E4	R16	*C1	R110	*C7	R328	*E5	R552	*G1	R771	*L2
C67	D2	C709	*L6	IC309	E2	R17	*A4	R111	*C7	R329	*E5	R553	*G1	R772	*L2
C68	D2	C710	*K6	IC310	F2	R18	*B4	R112	*C7	R330	*E4	R554	*G2	R773	*L2
C69	D2	C711	*L6	IC500	G7	R19	*E1	R113	*C7	R331	*E6	R555	*G2	R774	*L1
C70	B2	C712	*J5	IC501	G6	R20	*A3	R114	*C7	R332	*E5	R556	G1	R775	*C3
C71	*C2	C713	*K6	IC502	*G7	R21	*B3	R115	*C7	R333	*E5	R557	*G1		
C72	*C2	C714	*K5	IC503	G6	R22	*D3	R116	*C6	R334	*E4	R558	*G1	*:B SIDE	
C73	*C2	C715	*K5	IC505	*G5	R23	*D3	R117	*A7	R335	*E4	R559	*G2		
C74	*C3	C716	*K6	IC506	G4	R24	*D3	R118	*A7	R336	*E4	R560	*H2		
C75	*D1	C717	*J4	IC507	*H4	R25	*C1	R119	*A7	R337	*E3	R561	*H2		
C76	*B2	C718	*J4	IC508	G4	R26	*C1	R120	*A7	R338	*F3	R562	*G3		
C300	*D7	C719	J4	IC509	G2	R27	*D1	R121	*E1	R339	*E3	R563	*G2		
C301	*E7	C720	*L3	IC510	H2	R28	*D1	R122	*E1	R340	*E3	R564	G3		
C302	*E6	C721	*K4	IC700	J7	R29	*A4	R123	*L1	R341	*E3	R565	*G2		
C303	*E7	C722	*L3	IC701	K6	R30	*B4	R124	L1	R342	*F3	R566	G3		
C304	*E7	C723	*J3	IC702	*K7	R31	*A4	R125	*J1	R343	*F3	R567	*H2		
C305	F7	C724	*J3	IC703	K6	R32	*B4	R126	*K1	R344	*F4	R568	G4		
C306	E7	C725	*K1	IC705	*K5	R33	*A5	R127	*K1	R345	*F4	R569	*H2		
C307	*E7	C726	*K2	IC706	J4	R34	*B5	R128	*J1	R346	*E4	R570	*H2		
C308	*E7	C727	*J2	IC707	*L4	R35	*A4	R129	*H1	R347	*E3	R571	*H2		
C309	*F6	C728	J3	IC708	K4	R36	*B4	R130	*H1	R348	*F3	R572	*H2		
C310	*E6	C729	K3	IC709	K2	R37	*C4	R131	*H1	R349	*E3	R573	*H2		
C311	*F6	C730	J3	IC710	L2	R38	*C3	R132	*H1	R350	*E3	R574	*H1		
C312	*E5	C731	L3			R39	*C4	R133	*H1	R351	*E1	R700	*J7		
C313	*E6	C732	*L2	Q1	*C1	R40	*C3	R134	D1	R352	*E1	R701	*J7		
C314	*E5	C733	*L1	Q2	*D1	R41	*A4	R135	D2	R353	*E1	R702	*J7		
C315	*E5	C734	*L2	Q3	C1	R42	*B4	R136	D2	R354	*E2	R703	*J7		

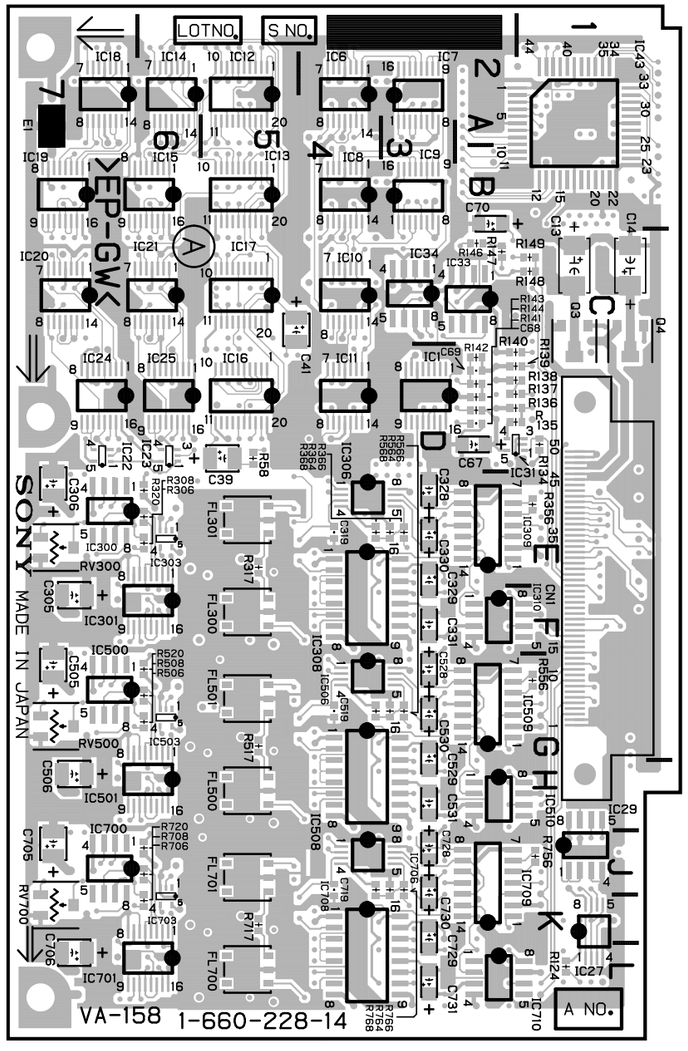

HDC-700 : S/N 10078 and Higher
HDC-750 : S/N 10116 and Higher

VA-158 -A SIDE-
1-660-228-14

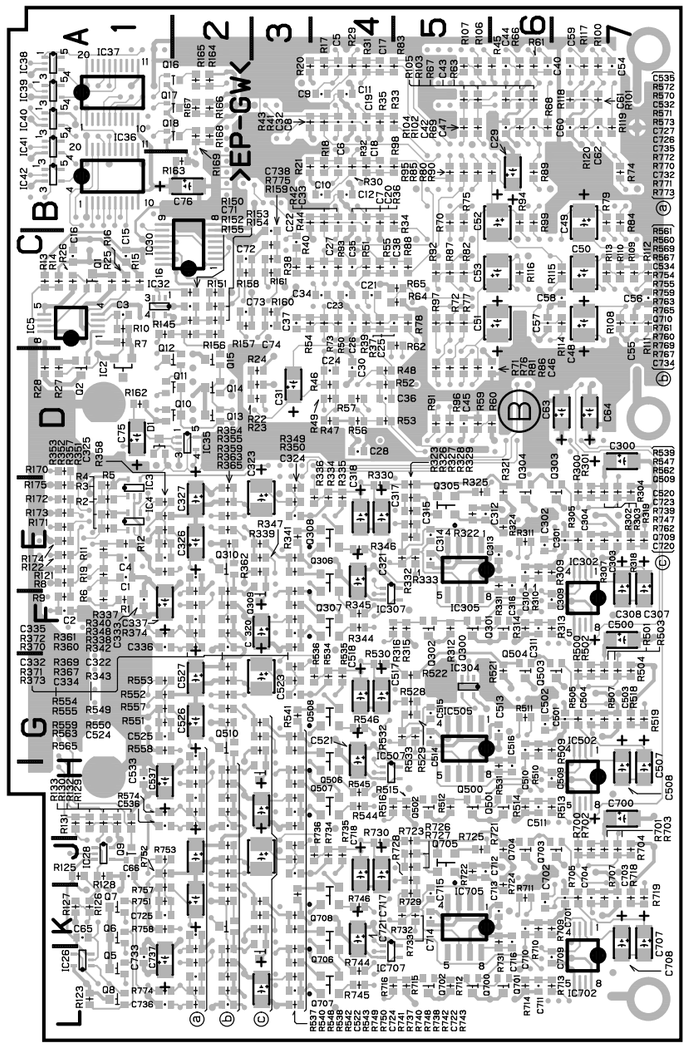

VA-158 -B SIDE-
1-660-228-14

VA-158 (1-660-228-12)

CN1	F1	C320	*F3	E1	A7	Q14	*D2	R54	*C3	R148	C1	R366	E3	R715	*L5
		C321	*E4			Q15	*D2	R55	*C4	R149	C1	R367	*F2	R716	*L4
C3	*C1	C322	*F3	FL300	E5	Q16	*A2	R56	*D4	R150	*C2	R368	E4	R717	*L5
C5	*A4	C323	*E3	FL500	G5	Q17	*A2	R57	*D4	R151	*C2	R369	*F2	R718	*K7
C6	*B4	C324	*E3	FL700	K5	Q18	*A2	R58	D5	R152	*C2	R370	*F2	R719	*K7
C7	*B4	C325	*E1			Q300	*F5	R59	*D5	R153	*C2	R371	*F2	R720	J6
C8	*A4	C326	*E2	IC1	D3	Q301	*F6	R60	*D6	R154	*C2	R372	*F2	R721	*J6
C9	*A4	C327	*E2	IC2	*D1	Q302	*F5	R61	*A6	R155	*C2	R373	*F2	R722	*J5
C10	*B4	C328	E3	IC3	*E1	Q303	*E7	R62	*C5	R156	*C2	R374	*F1	R723	*J5
C11	*A4	C329	E3	IC4	*E1	Q304	*E6	R63	*A6	R157	*C2	R500	*G7	R724	*J6
C12	*B4	C330	E3	IC5	*C1	Q305	*E5	R64	*C5	R158	*C2	R501	*G7	R725	*J5
C13	C1	C331	F3	IC6	A4	Q306	*E4	R65	*C5	R159	*C3	R502	*G7	R726	*J5
C14	C1	C332	*F2	IC7	A3	Q307	*F4	R66	*A6	R160	*C3	R503	*G7	R727	*J5
C15	*C1	C333	*F1	IC8	B4	Q308	*E4	R67	*A6	R161	*C3	R504	*G7	R728	*J5
C16	*C1	C334	*F2	IC9	B3	Q309	*F3	R68	*A6	R162	*D1	R505	*G7	R729	*K5
C17	*A4	C335	*E2	IC10	C4	Q310	*E2	R69	*A6	R163	*B2	R506	G6	R730	*J4
C18	*B4	C336	*F1	IC11	D4	Q500	*H5	R70	*B5	R164	*A2	R507	*G7	R731	*K6
C19	*A4	C337	*F1	IC12	A5	Q501	*H6	R71	*D5	R165	*A2	R508	G6	R732	*K5
C20	*B4	C500	*F7	IC13	B5	Q502	*H5	R72	*C5	R166	*A2	R509	*G6	R733	*K5
C21	*C4	C501	*G7	IC14	A6	Q503	*G7	R73	*C4	R167	*A2	R510	*G6	R734	*J4
C22	*C3	C502	*G6	IC15	B6	Q504	*G6	R74	*B7	R168	*A2	R511	*G6	R735	*J4
C23	*C4	C503	*G7	IC16	D5	Q506	*G4	R75	*B5	R169	*A2	R512	*H5	R736	*J4
C24	*D4	C504	*G7	IC17	C5	Q507	*H4	R76	*D5	R170	*D1	R513	*H6	R737	*K3
C25	*C5	C505	G7	IC18	A7	Q508	*G4	R77	*C5	R171	*E1	R514	*H6	R738	*L3
C26	*C4	C506	H7	IC19	B7	Q509	*H3	R78	*C5	R172	*E1	R515	*H5	R739	*K3
C27	*C4	C507	*H7	IC20	C7	Q510	*G2	R79	*B7	R173	*E1	R516	*H4	R740	*K3
C28	*D4	C508	*H7	IC21	C6	Q700	*L5	R80	*B5	R174	*E1	R517	*H5	R741	*K3
C29	*B6	C509	*H6	IC22	D7	Q701	*L6	R81	*D5	R175	*E1	R518	*G7	R742	*L3
C30	*D4	C510	*G6	IC23	D6	Q702	*L5	R82	*C5	R300	*E7	R519	*G7	R743	*L3
C31	*D3	C511	*H6	IC24	D7	Q703	*J7	R83	*A5	R301	*E7	R520	G6	R744	*L4
C32	*A4	C513	*G6	IC25	D6	Q704	*J6	R84	*B7	R302	*E7	R521	*G6	R745	*L4
C33	*B4	C514	*G5	IC26	*L1	Q705	*J5	R85	*B5	R303	*E7	R522	*G5	R746	*K4
C34	*C4	C516	*H6	IC27	L1	Q706	*K4	R86	*D5	R304	*E7	R528	*G5	R747	*K3
C35	*C4	C517	*G4	IC28	*J1	Q707	*L4	R87	*C5	R305	*E7	R529	*G5	R748	*L3
C36	*D4	C518	*G4	IC29	J1	Q708	*K4	R88	*C5	R306	E6	R530	*G4	R749	*J3
C37	*C3	C519	G4	IC30	*C2	Q709	*L3	R89	*B6	R307	*E7	R531	*H6	R750	*J3
C38	*C5	C520	*H3	IC31	D2	Q710	*K2	R90	*B6	R308	E6	R532	*G5	R751	*K1
C39	D5	C521	*G4	IC32	*C1			R91	*D5	R309	*E6	R533	*G5	R752	*J1
C40	*A6	C522	*H3	IC33	C2	RV300	E7	R92	*C5	R310	*E6	R534	*G4	R753	*J1
C41	C5	C523	*G3	IC34	C3	RV500	G7	R93	*C4	R311	*E6	R535	*G4	R754	*J2
C42	*A6	C524	*G3	IC35	*D2	RV700	K7	R94	*B6	R312	*F5	R536	*G4	R755	*J2
C43	*A6	C525	*G1	IC36	*B1			R95	*B5	R313	*F6	R537	*G3	R756	*J1
C44	*A6	C526	*G2	IC37	*A1	R1	*F1	R96	*D5	R314	*F6	R538	*H3	R757	*K1
C45	*D5	C527	*G2	IC38	*A1	R2	*E1	R97	*C5	R315	*F5	R539	*G3	R758	*K1
C46	*D6	C528	G3	IC39	*A1	R3	*E1	R98	*B5	R316	*F4	R540	*G3	R759	*J2
C47	*A6	C529	G3	IC40	*A1	R4	*E1	R99	*B6	R317	*F5	R541	*G3	R760	*L2
C48	*C7	C530	G3	IC41	*A1	R5	*E1	R100	*A7	R318	*E7	R542	*H3	R761	*L2
C49	*B7	C531	H3	IC42	*B1	R6	*F1	R101	*A7	R319	*E7	R543	*H3	R762	*K3
C50	*C7	C532	*H2	IC43	A1	R7	*C1	R102	*A5	R320	E6	R544	*H4	R763	*K2
C51	*C6	C533	*H1	IC300	E7	R8	*E1	R103	*A5	R321	*E6	R545	*H4	R764	J3
C52	*B6	C534	*H2	IC301	E6	R9	*F1	R104	*A5	R322	*E5	R546	*G4	R765	*K2
C53	*C6	C535	*G2	IC302	*E7	R10	*C1	R105	*A5	R323	*E5	R547	*G3	R766	J3
C54	*A7	C536	*H1	IC303	E6	R11	*E1	R106	*A5	R324	*E6	R548	*H3	R767	*L2
C55	*C7	C537	*H1	IC304	*G5	R12	*E1	R107	*A5	R325	*E5	R549	*G3	R768	J4
C56	*C7	C700	*H7	IC305	*E5	R13	*C1	R108	*C7	R326	*E5	R550	*G3	R769	*L2
C57	*C6	C701	*K7	IC306	E4	R14	*C1	R109	*C7	R327	*E5	R551	*G1	R770	*L2
C58	*C7	C702	*K6	IC307	*F4	R15	*C1	R110	*C7	R328	*E5	R552	*G1	R771	*L2
C59	*A7	C703	*K7	IC308	E4	R16	*C1	R111	*C7	R329	*E5	R553	*G1	R772	*L2
C60	*A7	C704	*K7	IC309	E1	R17	*A4	R112	*C7	R330	*E4	R554	*G2	R773	*L2
C61	*A7	C705	J7	IC310	F2	R18	*B4	R113	*C7	R331	*E6	R555	*G2	R774	*L1
C62	*A7	C706	L7	IC500	G7	R20	*A3	R114	*C7	R332	*E5	R556	*G1	R775	*C3
C63	*D7	C707	*K7	IC501	G6	R21	*B3	R115	*C7	R333	*E5	R557	*G1		
C64	*D7	C708	*K7	IC502	*G7	R22	*D3	R116	*C6	R334	*E4	R558	*G1	*:B SIDE	
C65	*K1	C709	*L6	IC503	G6	R23	*D3	R117	*A7	R335	*E4	R559	*G2		
C66	*J1	C710	*K6	IC505	*G5	R24	*D3	R118	*A7	R336	*E4	R560	*H2		
C67	D2	C711	*L6	IC506	G4	R25	*C1	R119	*A7	R337	*E3	R561	*H2		
C68	D2	C712	*J5	IC507	*H4	R26	*C1	R120	*A7	R338	*F3	R562	*G3		
C69	D2	C713	*K6	IC508	G4	R27	*D1	R121	*E1	R339	*E3	R563	*G2		
C70	B2	C714	*K5	IC509	G1	R28	*D1	R122	*E1	R340	*E3	R564	G3		
C71	*C2	C716	*K6	IC510	H2	R29	*A4	R123	*L1	R341	*E3	R565	*G2		
C72	*C2	C717	*J4	IC700	J7	R30	*B4	R124	L1	R342	*F3	R566	G3		
C73	*C2	C718	*J4	IC701	K6	R31	*A4	R125	*J1	R343	*F3	R567	*H2		
C74	*C3	C719	J4	IC702	*K7	R32	*B4	R126	*K1	R344	*F4	R568	G4		
C75	*D1	C720	*L3	IC703	K6	R33	*A5	R127	*K1	R345	*F4	R569	*H2		
C76	*B2	C721	*K4	IC705	*K5	R34	*B5	R128	*J1	R346	*E4	R570	*H2		
C300	*D7	C722	*L3	IC706	J4	R35	*A4	R129	*H1	R347	*E3	R571	*H2		
C301	*E7	C723	*J3	IC707	*L4	R36	*B4	R130	*H1	R348	*F3	R572	*H2		
C302	*E6	C724	*J3	IC708	K4	R37	*C4	R131	*H1	R349	*E3	R573	*H2		
C303	*E7	C725	*K1	IC709	K1	R38	*C3	R132	*H1	R350	*E3	R574	*H1		
C304	*E7	C726	*K2	IC710	L2	R39	*C4	R133	*H1	R351	*E1	R700	*J7		
C305	F7	C727	*J2			R40	*C3	R134	D1	R352	*E1	R701	*J7		
C306	E7	C728	J3	Q1	*C1	R41	*A4	R135	D2	R353	*E1	R702	*J7		
C307	*E7	C729	K3	Q2	*D1	R42	*B4	R136	D2	R354	*E2	R703	*J7		
C308	*E7	C730	J3	Q3	C1	R43	*A3	R137	D2	R355	*E2	R704	*J7		
C309	*F6	C731	L3	Q4	C1	R44	*B3	R138	D2	R356	*E1	R705	*K7		
C310	*E6	C732	*L2	Q5	*L1	R45	*A6	R139	D2	R357	*E1	R706	K6		
C311	*F6	C733	*L1	Q6	*K1	R46	*D4	R140	D2	R358	*E1	R707	*K7		
C312	*E5	C734	*L2	Q7	*K1	R47	*D4	R141	D2	R359	*E2	R708	J6		
C313	*E6	C735	*K2	Q8	*L1	R48	*D4	R142	D2	R360	*F2	R709	*K6		
C314	*E5	C736	*L1	Q9	*J1	R49	*D4	R143	D2	R361	*F2	R710	*K6		
C316	*E6	C737	*L1	Q10	*D2	R50	*C4	R144	D2	R362	*E3	R711	*K6		
C317	*E4	C738	*C3	Q11	*D2	R51	*C4	R145	*C1	R363	*E2	R712	*L5		
C318	*E4			Q12	*D2	R52	*D4	R146	C2	R364	E3	R713	*L6		
C319	E4	D1	*D1	Q13	*D2	R53	*D4	R147	C2	R365	*E2	R714	*L6		

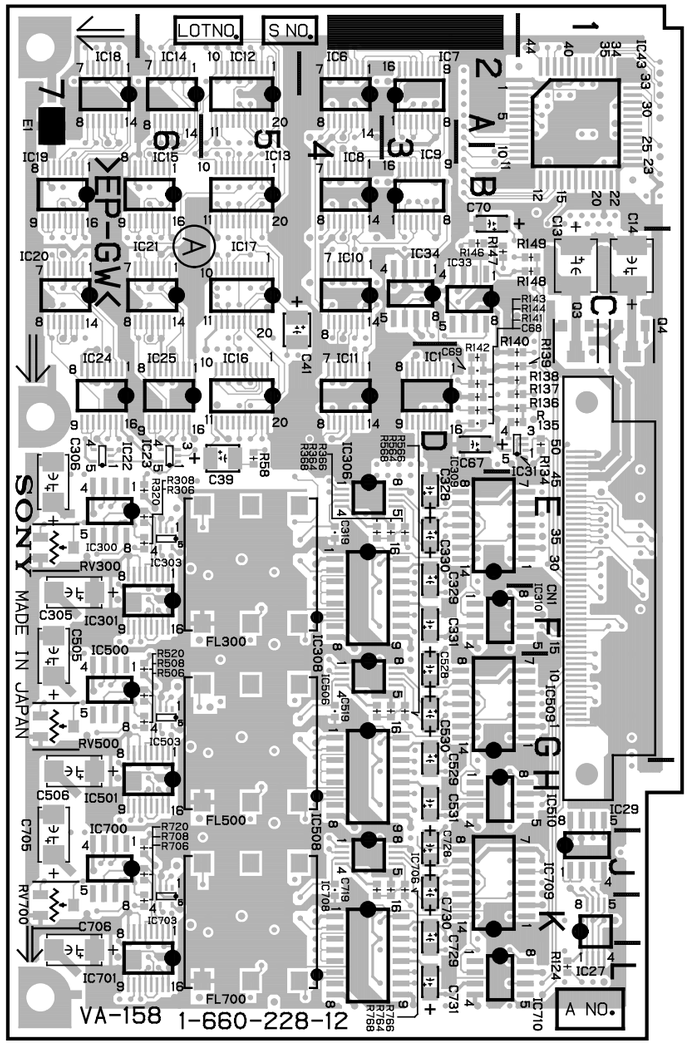

HDC-700 : S/N 10013 through 10077
HDC-750 : S/N 10041 through 10115

VA-158 -A SIDE-
1-660-228-12

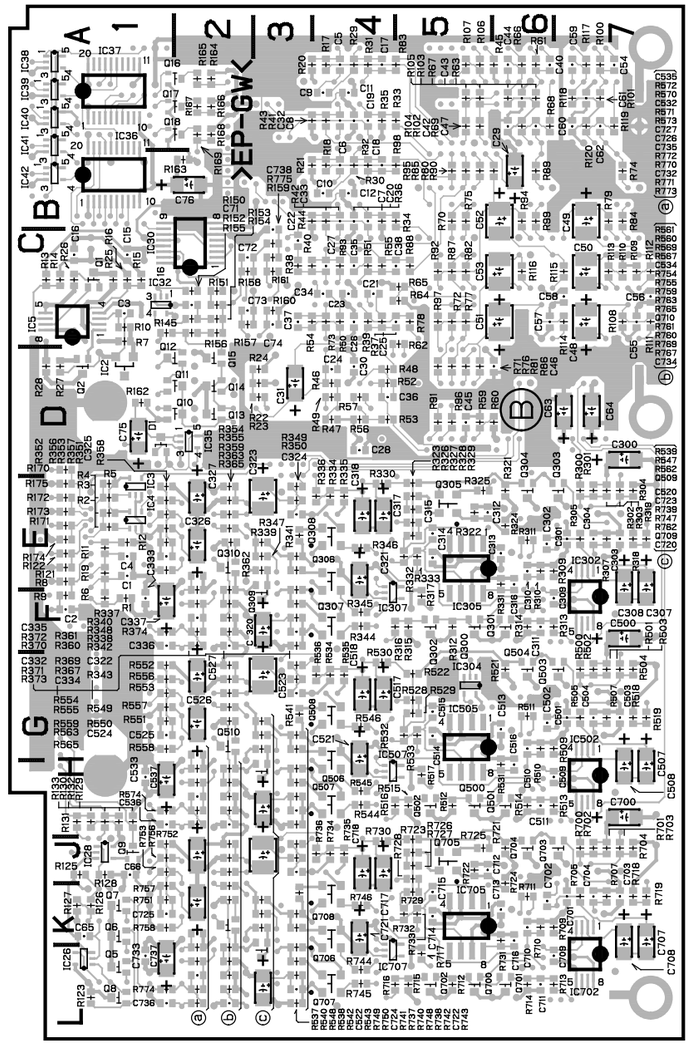

VA-158 -B SIDE-
1-660-228-12

VA-158 (1-660-228-11)

CN1	F1	C321	*E4	IC700	J7		
		C322	*F3	IC701	K6		
C3	*C1	C323	*E3	IC702	*K7		
C5	*A4	C324	*E3	IC703	K6		
C6	*B4	C325	*E1	IC705	*K5		
C7	*B4	C326	*E2	IC706	J4		
C8	*A4	C327	*E2	IC707	*L4		
C9	*A4	C328	E3	IC708	K4		
C10	*B4	C329	E3	IC709	K1		
C11	*A4	C330	E3	IC710	L2		
C12	*B4	C331	F3				
C13	C1	C332	*F2	Q1	*C1		
C14	C1	C333	*F1	Q2	*D1		
C15	*C1	C334	*F2	Q3	C1		
C16	*C1	C335	*E2	Q4	C1		
C17	*A4	C336	*F1	Q5	*L1		
C18	*B4	C337	*F1	Q6	*K1		
C19	*A4	C500	*F7	Q7	*K1		
C20	*B4	C501	*G7	Q8	*L1		
C21	*C4	C503	*G7	Q9	*J1		
C22	*C3	C504	*G7	Q10	*D2		
C23	*C4	C505	G7	Q11	*D2		
C24	*D4	C506	H7	Q12	*D2		
C25	*C5	C507	*H7	Q13	*D2		
C26	*C4	C508	*H7	Q14	*D2		
C27	*C4	C509	*H6	Q15	*D2		
C28	*D4	C510	*G6	Q16	*A2		
C29	*B6	C511	*H6	Q17	*A2		
C30	*D4	C513	*G6	Q18	*A2		
C31	*D3	C514	*G5	Q300	*F5		
C32	*A4	C516	*H6	Q301	*F6		
C33	*B4	C517	*G4	Q302	*F5		
C34	*C4	C518	*G4	Q303	*E7		
C35	*C4	C519	G4	Q304	*E6		
C36	*D4	C520	*H3	Q305	*E5		
C37	*C3	C521	*G4	Q306	*E4		
C38	*C5	C522	*H3	Q307	*F4		
C39	D5	C523	*G3	Q308	*E4		
C40	*A6	C524	*G3	Q309	*F3		
C41	C5	C525	*G1	Q310	*E2		
C42	*A6	C526	*G2	Q500	*H5		
C43	*A6	C527	*G2	Q501	*H6		
C44	*A6	C528	G3	Q502	*H5		
C45	*D5	C529	G3	Q503	*G7		
C46	*D6	C530	G3	Q504	*G6		
C47	*A6	C531	H3	Q506	*G4		
C48	*C7	C532	*H2	Q507	*H4		
C49	*B7	C533	*H1	Q508	*G4		
C50	*C7	C534	*H2	Q509	*H3		
C51	*C6	C535	*G2	Q510	*G2		
C52	*B6	C536	*H1	Q700	*L5		
C53	*C6	C537	*H1	Q701	*L6		
C54	*A7	C700	*H7	Q702	*L5		
C55	*C7	C701	*K7	Q703	*J7		
C56	*C7	C703	*K7	Q704	*J6		
C57	*C6	C704	*K7	Q705	*J5		
C58	*C7	C705	J7	Q706	*K4		
C59	*A7	C706	L7	Q707	*L4		
C60	*A7	C707	*K7	Q708	*K4		
C61	*A7	C708	*K7	Q709	*L3		
C62	*A7	C709	*L6	Q710	*K2		
C63	*D7	C710	*K6				
C64	*D7	C711	*L6	RV300	E7		
C65	*K1	C712	*J5	RV500	G7		
C66	*J1	C713	*K6	RV700	K7		
C67	D2	C714	*K5				
C68	D2	C716	*K6				
C69	D2	C717	*J4				
C70	B2	C718	*J4				
C71	*C2	C719	J4				
C72	*C2	C720	*L3				
C73	*C2	C721	*K4				
C74	*C3						
C75	*D1	IC300	E7				
C76	*B2	IC301	E6				
C300	*D7	IC302	*E7				
C301	*E7	IC303	E6				
C303	*E7	IC304	*G5				
C304	*E7	IC305	*E5				
C305	F7	IC306	E4				
C306	E7	IC307	*F4				
C307	*E7	IC308	E4				
C308	*E7	IC309	E1				
C309	*F6	IC310	F2				
C310	*E6	IC500	G7				
C311	*F6	IC501	G6				
C312	*E5	IC502	*G7				
C313	*E6	IC503	G6				
C314	*E5	IC505	*G5				
C316	*E6	IC506	G4				
C317	*E4	IC507	*H4				
C318	*E4	IC508	G4				
C319	E4	IC509	G1				
C320	*F3	IC510	H2				

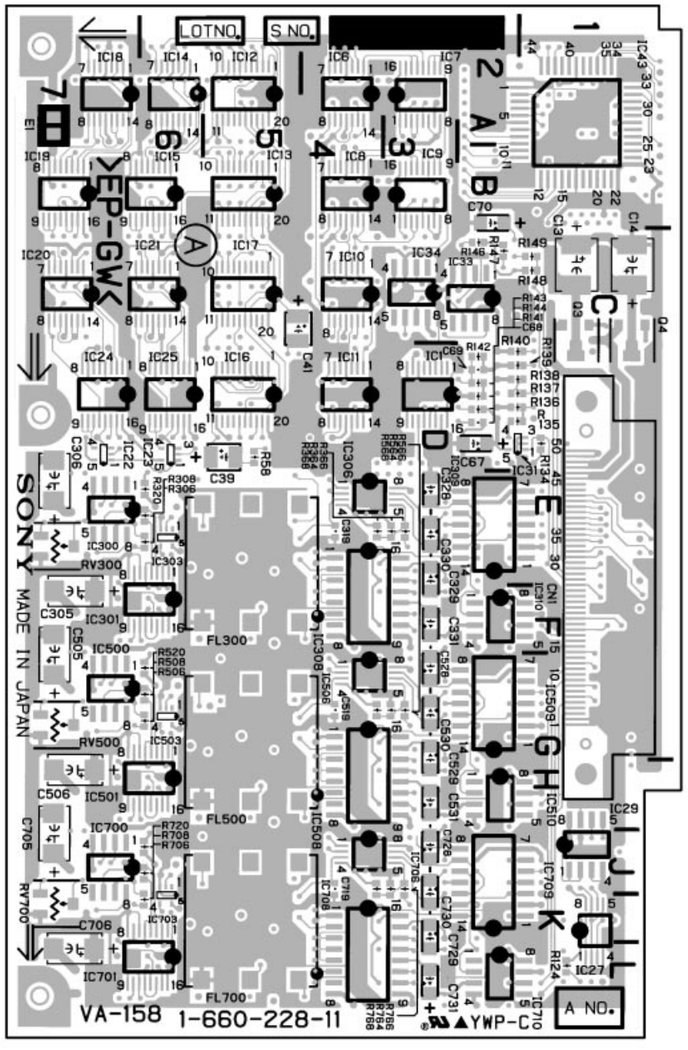

HDC-700 : S/N 10001 through 10012
HDC-750 : S/N 10001 through 10040

VA-158 -A SIDE-
1-660-228-11

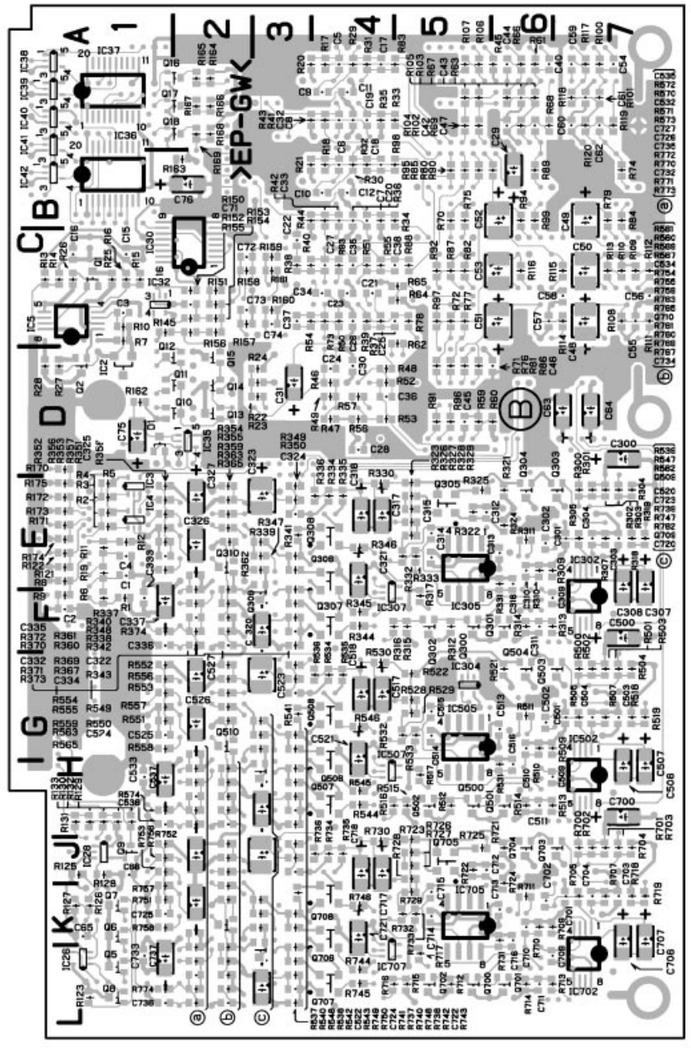

VA-158 -B SIDE-
1-660-228-11

R1	*F1	R164	*A2	R507	*G7	R731	*K6
R2	*E1	R165	*A2	R508	G6	R732	*K5
R3	*E1	R166	*A2	R509	*G6	R733	*K5
R4	*E1	R167	*A2	R510	*G6	R734	*J4
R5	*E1	R168	*A2	R511	*G6	R735	*J4
R6	*F1	R169	*A2	R512	*H5	R736	*J4
R7	*C1	R170	*D1	R513	*H6	R737	*K3
R8	*E1	R171	*E1	R514	*H6	R738	*L3
R9	*F1	R172	*E1	R515	*H5	R739	*K3
R10	*C1	R173	*E1	R516	*H4	R740	*K3
R11	*E1	R174	*E1	R517	*H5	R741	*K3
R12	*E1	R175	*E1	R518	*G7	R742	*L3
R13	*C1	R300	*E7	R519	*G7	R743	*L3
R14	*C1	R301	*E7	R520	G6	R744	*L4
R15	*C1	R302	*E7	R521	*G6	R745	*L4
R16	*C1	R303	*E7	R522	*G5	R746	*K4
R17	*A4	R304	*E7	R528	*G5	R747	*K3
R18	*B4	R305	*E7	R529	*G5	R748	*L3
R20	*A3	R306	E6	R530	*G4	R749	*J3
R21	*B3	R307	*E7	R531	*H6	R750	*J3
R22	*D3	R308	E6	R532	*G5	R751	*K1
R23	*D3	R309	*E6	R533	*G5	R752	*J1
R24	*D3	R310	*E6	R534	*G4	R753	*J1
R25	*C1	R311	*E6	R535	*G4	R754	*J2
R26	*C1	R312	*F5	R536	*G4	R755	*J2
R27	*D1	R313	*F6	R537	*G3	R756	*J1
R28	*D1	R314	*F6	R538	*H3	R757	*K1
R29	*A4	R315	*F5	R539	*G3	R758	*K1
R30	*B4	R316	*F4	R540	*G3	R759	*J2
R31	*A4	R317	*F5	R541	*G3	R760	*L2
R32	*B4	R318	*E7	R542	*H3	R761	*L2
R33	*A5	R319	*E7	R543	*H3	R762	*K3
R34	*B5	R320	E6	R544	*H4	R763	*K2
R35	*A4	R321	*E6	R545	*H4	R764	J3
R36	*B4	R322	*E5	R546	*G4	R765	*K2
R37	*C4	R323	*E5	R547	*G3	R766	J3
R38	*C3	R324	*E6	R548	*H3	R767	*L2
R39	*C4	R325	*E5	R549	*G3	R768	J4
R40	*C3	R326	*E5	R550	*G3	R769	*L2
R41	*A4	R327	*E5	R551	*G1	R770	*L2
R42	*B4	R328	*E5	R552	*G1	R771	*L2
R43	*A3	R329	*E5	R553	*G1	R772	*L2
R44	*B3	R330	*E4	R554	*G2	R773	*L2
R45	*A6	R331	*E6	R555	*G2	R774	*L1
R46	*D4	R332	*E5	R556	*G1		
R47	*D4	R333	*E5	R557	*G1	*:B SIDE	
R48	*D4	R334	*E4	R558	*G1		
R49	*D4	R335	*E4	R559	*G2		
R50	*C4	R336	*E4	R560	*H2		
R51	*C4	R337	*E3	R561	*H2		
R52	*D4	R338	*F3	R562	*G3		
R53	*D4	R339	*E3	R563	*G2		
R54	*C3	R340	*E3	R564	G3		
R55	*C4	R341	*E3	R565	*G2		
R56	*D4	R342	*F3	R566	G3		
R57	*D4	R343	*F3	R567	*H2		
R58	D5	R344	*F4	R568	G4		
R59	*D5	R345	*F4	R569	*H2		
R60	*D6	R346	*E4	R570	*H2		
R61	*A6	R347	*E3	R571	*H2		
R62	*C5	R348	*F3	R572	*H2		
R63	*A6	R349	*E3	R573	*H2		
R64	*C5	R350	*E3	R574	*H1		
R65	*C5	R351	*E1	R700	*J7		
R66	*A6	R352	*E1	R701	*J7		
R67	*A6	R353	*E1	R702	*J7		
R68	*A6	R354	*E2	R703	*J7		
R69	*A6	R355	*E2	R704	*J7		
R70	*B5	R356	*E1	R705	*K7		
R71	*D5	R357	*E1	R706	K6		
R72	*C5	R358	*E1	R707	*K7		
R73	*C4	R359	*E2	R708	J6		
R74	*B7	R360	*F2	R709	*K6		
R75	*B5	R361	*F2	R710	*K6		
R76	*D5	R362	*E3	R711	*K6		
R77	*C5	R363	*E2	R712	*L5		
R78	*C5	R364	E3	R713	*L6		
R79	*B7	R365	*E2	R714	*L6		
R80	*B5	R366	E3	R715	*L5		
R81	*D5	R367	*F2	R716	*L4		
R82	*C5	R368	E4	R717	*L5		
R83	*A5	R369	*F2	R718	*K7		
R84	*B7	R370	*F2	R719	*K7		
R85	*B5	R371	*F2	R720	J6		
R86	*D5	R372	*F2	R721	*J6		
R155	*C2	R373	*F2	R722	*J5		
R156	*C2	R374	*F1	R723	*J5		
R157	*C2	R500	*G7	R724	*J6		
R158	*C2	R501	*G7	R725	*J5		
R159	*C3	R502	*G7	R726	*J5		
R160	*C3	R503	*G7	R727	*J5		
R161	*C3	R504	*G7	R728	*J5		
R162	*D1	R505	*G7	R729	*K5		
R163	*B2	R506	G6	R730	*J4		

MX-59 (1-660-229-12)

CN1	E1	C287	*C2	D101	*E5	Q214	*C3	R67	*B2	R250	*F2
		C288	*C2	D201	*F5	Q220	*A2	R101	*D4	R251	*F2
C1	*B2	C289	*A2	D301	*G5	Q221	*A2	R102	*E4	R252	*F2
C2	*B2	C290	*A2			Q301	*H3	R108	*D4	R253	*F3
C3	*A2	C291	B1	E1	H5	Q302	*H4	R110	*D4	R254	*F2
C4	*B3	C292	*A2			Q303	*H4	R111	*E3	R255	*F2
C5	*A2	C293	C2	IC1	*A3	Q304	*G4	R112	*E4	R256	*F2
C8	*B1	C294	*C1	IC2	*A3	Q305	*H2	R113	*E4	R257	*F2
C11	*D4	C295	*A2	IC3	*D1	Q307	*H3	R114	*E4	R258	*F2
C12	*D2	C296	*A1	IC5	*B1	Q308	*H1	R115	*E5	R260	*H1
C13	D4	C297	*B1	IC6	A1	Q401	*D5	R116	*D4	R261	*H1
C14	D2	C298	B1	IC7	*A1	Q402	*D5	R117	*E5	R262	*F3
C16	D3	C299	*B1	IC8	A1	Q403	D5	R118	*E4	R263	*F2
C17	D2	C302	*G4	IC9	D2	Q404	*E5	R119	*E3	R270	*C2
C18	D4	C303	H4	IC10	*D1	Q405	*F5	R120	*E3	R271	*G4
C19	*D2	C304	*G4	IC11	B1	Q406	F5	R121	*E3	R272	*C1
C20	*D3	C305	*G4	IC12	*C3	Q407	*G5	R122	*E3	R273	*C1
C21	*E1	C306	*G4	IC14	*A2	Q408	*G5	R123	*E3	R274	*C1
C22	*C4	C307	*G5	IC21	*E1	Q409	G5	R124	*E3	R275	*C1
C23	*C2	C308	*H4	IC100	A2	Q410	*D5	R125	*E3	R276	*C3
C26	D4	C309	*H5	IC101	D4	Q411	*B5	R126	*E3	R277	*C3
C27	C2	C310	*G4	IC102	D4	Q501	*C3	R127	*E3	R278	*C1
C29	D3	C311	*G4	IC103	E3			R128	*E3	R279	*C1
C30	D2	C312	*H4	IC104	D4	RV1	B2	R129	*E4	R280	*B3
C32	D4	C313	*H3	IC105	D2	RV101	E4	R130	E4	R281	*B3
C33	*C2	C314	*H4	IC106	D2	RV103	E3	R131	*E4	R282	*C2
C34	*C3	C315	G3	IC107	E5	RV201	G4	R132	*E4	R283	*C2
C35	*D1	C316	*G3	IC108	E2	RV203	F3	R133	*E4	R284	*B2
C102	*D4	C317	*G3	IC201	F4	RV210	B2	R134	*E4	R285	*B2
C103	E4	C318	G3	IC202	F4	RV301	H4	R135	*E4	R286	*B2
C104	*E4	C319	*G3	IC203	F3	RV303	G3	R136	*D4	R287	*C2
C105	*E4	C320	*G3	IC204	F4	RV401	C5	R137	*E3	R288	*C2
C106	*D4	C321	*G2	IC205	F2			R138	*E4	R289	*C2
C107	*D5	C322	*G2	IC206	F2	R1	*B2	R139	*D3	R290	*A2
C108	*E4	C323	*G2	IC207	F5	R2	*E1	R140	D3	R291	*A2
C109	*E5	C325	*G2	IC208	F2	R3	*B2	R141	*D3	R292	*A2
C110	*E4	C326	*G2	IC210	C1	R4	*C1	R144	D3	R293	*A2
C111	*D4	C327	*H2	IC211	C3	R5	*C1	R145	*D2	R294	*A1
C112	*E4	C328	*G2	IC212	C2	R6	*C1	R146	*D2	R295	*A1
C113	*E3	C329	*G2	IC213	B1	R7	C1	R147	*D2	R296	A1
C114	*E4	C331	*G3	IC301	G4	R8	C1	R148	*D2	R297	*A2
C115	E3	C332	*G3	IC302	G4	R9	C1	R149	*E2	R298	*A2
C116	*E3	C333	*H2	IC303	G3	R10	C1	R150	*E2	R299	*B1
C117	*E3	C371	*H4	IC304	G4	R11	C1	R151	*E2	R301	*G4
C118	D3	C381	*G2	IC305	G2	R12	*C1	R152	*E2	R302	*G4
C119	*D3	C401	*A4	IC306	G2	R13	*C1	R153	*D2	R308	*G4
C120	*E3	C402	*A4	IC307	H5	R14	*E1	R154	*E3	R310	*G4
C121	*E2	C403	*A3	IC308	H2	R15	*E1	R155	*E2	R311	*H3
C122	*E2	C404	*A3	IC401	A4	R16	*B2	R156	*E2	R312	*G4
C123	*E2	C405	*A5	IC402	A3	R17	*B1	R157	*E2	R313	*G4
C125	*D2	C406	*A5	IC403	A5	R18	*B1	R158	*E2	R314	*G4
C126	*D2	C407	*A5	IC404	B5	R19	*B1	R159	*E2	R315	*H5
C127	*E2	C408	*A5	IC405	B5	R20	*B2	R162	*E3	R316	*G4
C128	*E2	C409	*B5	IC406	B5	R21	*C1	R163	*E2	R317	*H5
C129	*E2	C410	*B5	IC407	B4	R22	*A3	R171	*E4	R318	*H4
C131	*E3	C411	*B5	IC408	B3	R23	*A3	R201	*F4	R319	*H3
C132	*D3	C412	*B4	IC409	B5	R24	*B2	R202	*F4	R320	*G3
C133	*E2	C413	*B4	IC410	C4	R25	C1	R208	*F4	R321	*H3
C171	*E4	C414	*B3	IC411	C3	R26	*B3	R210	*F4	R322	*H3
C181	*E2	C415	*B4	IC412	C5	R27	D3	R211	*G3	R323	*H3
C202	*F4	C416	*A5	IC413	E5	R28	*C4	R212	*F4	R324	*H3
C203	F4	C417	*B5	IC414	F5	R29	D3	R213	*F4	R325	*H3
C204	*F4	C418	*B5	IC415	G5	R30	*D3	R214	*F4	R326	*H3
C205	*F4	C419	*B5	IC416	C5	R31	*D4	R215	*F5	R327	*H3
C206	*F4	C420	*C4	IC417	B1	R32	*C4	R216	*F4	R328	*H4
C207	*F5	C421	*C4			R33	D3	R217	*F5	R329	*H3
C208	*F4	C422	*C3	Q1	*D4	R34	D3	R218	*F4	R330	G4
C209	*G5	C423	*C3	Q2	*D2	R35	*D3	R219	*G3	R331	*H4
C210	*F4	C424	*C5	Q3	*D3	R36	*D3	R220	*F3	R332	*G4
C211	*F4	C425	*C5	Q4	*D2	R37	*D3	R221	*F3	R333	*H4
C212	*F4	C426	*C5	Q5	*C4	R38	D3	R222	*G3	R334	*G4
C213	*F3	C427	*C5	Q6	*C2	R39	*D3	R223	*F3	R335	*G4
C214	*F4	C428	*C5	Q7	*C3	R40	*C3	R224	*F3	R336	*G4
C215	F3	C429	*E5	Q8	*D2	R41	D3	R225	*F3	R337	*H3
C216	*F3	C430	*E5	Q9	*C2	R42	*D2	R226	*F3	R338	*G4
C217	*F3	C431	*E5	Q10	*B1	R43	*D3	R227	*F3	R339	*G3
C218	F3	C432	*F5	Q11	*B2	R44	D2	R228	*F4	R340	G3
C219	*F3	C433	*F5	Q12	*B2	R45	*C2	R229	*F3	R341	*G3
C220	*F3	C434	*F5	Q13	*A2	R46	*D3	R230	F4	R344	G3
C221	*F2	C435	*H5	Q14	*A2	R47	*D3	R231	*F4	R345	*G2
C222	*F2	C436	*H5	Q15	*A2	R48	D2	R232	*F4	R346	*G2
C223	*F2	C437	*H5	Q101	*E3	R49	D2	R233	*F4	R347	*G2
C225	*F2	C438	*E5	Q102	*E4	R50	*D2	R234	*F4	R348	*G2
C226	*F2	C439	*F5	Q103	*E4	R51	*D2	R235	*F4	R349	*G2
C227	*G2	C440	*A5	Q104	*D4	R52	D2	R236	*F4	R350	*H2
C228	*F2	C441	*B5	Q105	*E2	R53	D2	R237	*F3	R351	*H2
C229	*F2	C442	*C5	Q106	*E3	R54	D2	R238	*F4	R352	*G2
C231	*F3	C443	*G5	Q201	*F3	R55	*E1	R239	*F3	R353	*H3
C232	*F3	C500	C2	Q202	*F4	R56	*B1	R240	F3	R354	*G2
C233	*G2	C600	*B2	Q203	*F4	R57	*B1	R241	*F3	R355	*H2
C271	*G4	C601	*B1	Q204	*F4	R58	*A3	R244	F3	R356	*G2
C281	*F2	C602	*C2	Q205	*G2	R59	B2	R245	*F2	R357	*H2
C282	*C2			Q206	*H1	R60	*B2	R246	*F2	R358	*H2
C283	C3	DL1	B2	Q207	*G3	R61	*F1	R247	*F2	R362	*H3
C284	*C2	DL2	B2	Q211	*C3	R63	*E1	R248	*F2	R363	*H2
C285	*C2	DL3	B2	Q212	*C2	R65	*F1	R249	*F2	R365	*H1
C286	*C2			Q213	*C2	R66	*B2				

R366	*G1	R492	G5	R600	B1						
R367	*G1	R493	*C5	R601	*B1						
R370	*D1	R494	*C5	R602	*C3						
R371	*H4	R495	*C5	R603	F3						
R372	*D2	R496	*C5	R604	G3						
R401	*A4	R497	*E5	R605	D3						
R402	*A4	R498	*E5	R606	B1						
R403	*A4	R499	*E5								
R404	*A4	R500	*E5	TP4	D2						
R405	*A4	R501	*E5	TP5	B2						
R406	*A4	R502	*F5	TP6	A1						
R407	*A4	R503	*F5	TP101	E3						
R408	*A4	R504	*F5	TP201	F3						
R409	*A4	R505	*F5	TP301	G3						
R410	*A4	R506	*F5	TP401	A5						
R411	*A4	R507	*F5	TP402	A5						
R412	B3	R508	*F5	TP403	C5						
R413	*A4	R509	*G5								
R414	*A3	R510	*G5	*:B SIDE							
R415	*A3	R511	*G5								
R416	*A4	R512	*G5								
R417	*A3	R513	*G5								
R418	*A3	R514	*H5								
R419	*A4	R516	*D4								
R420	*A4	R517	*B5								
R421	*A4	R520	*A4								
R422	*A5	R521	*A4								
R423	*A5	R522	*A4								
R424	*A5	R523	*A3								
R425	*A5	R524	*B4								
R426	*B5	R525	*B4								
R427	*B5	R526	*B4								
R428	*B5	R527	*B3								
R429	*A4	R528	*C4								
R430	*B5	R529	*C4								
R431	*B4	R530	*C4								
R432	*B4	R531	*C3								
R433	*B4	R532	D5								
R434	*B4	R533	F5								
R435	*B4	R534	G5								
R436	*B4	R600	B1								
R437	*B4	R601	*B1								
R438	*B4	R602	*C3								
R439	*B4	R603	F3								
R440	*B4	R604	G3								
R441	*B4	R605	D3								
R442	B3	R606	B1								
R443	*B3										
R444	B3	TP4	D2								
R445	*B3	TP5	B2								
R446	*B4	TP6	A1								
R447	*B3	TP101	E3								
R448	B3	TP201	F3								
R449	*B4	TP301	G3								
R450	*B4	TP401	A5								
R451	*B4	TP402	A5								
R452	*B5	TP403	C5								
R453	*B5										
R454	*B5	*:B SIDE									
R455	*B5										
R456	*C4										
R457	*C4										
R458	*C4										
R459	*C4										
R460	*C4										
R461	*C4										
R462	*C4										
R463	*C4										
R464	*C4										
R465	*C4										
R466	*C3										
R467	*C3										
R468	*C3										
R469	*C3										
R470	*C3										
R471	*C4										
R472	*C3										
R473	B3										
R474	*C4										
R475	*C4										
R476	*C4										
R477	*C5										
R478	*C5										
R479	*C5										
R480	*C5										
R481	*D5										
R482	D5										
R483	D5										
R484	F5										
R485	*E5										
R486	F5										
R487	*F5										
R488	E5										
R489	*G5										
R490	G5										
R491	*G5										

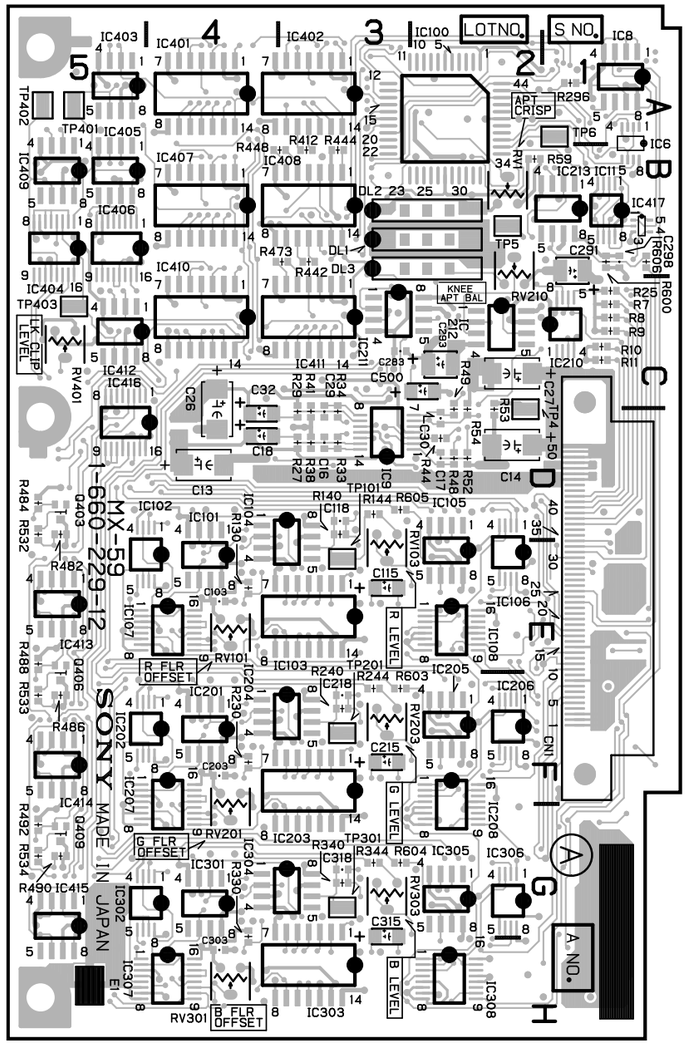

HDC-700 : S/N 10043 and Higher
HDC-750 : S/N 10086 and Higher

MX-59 -A SIDE-
1-660-229-12

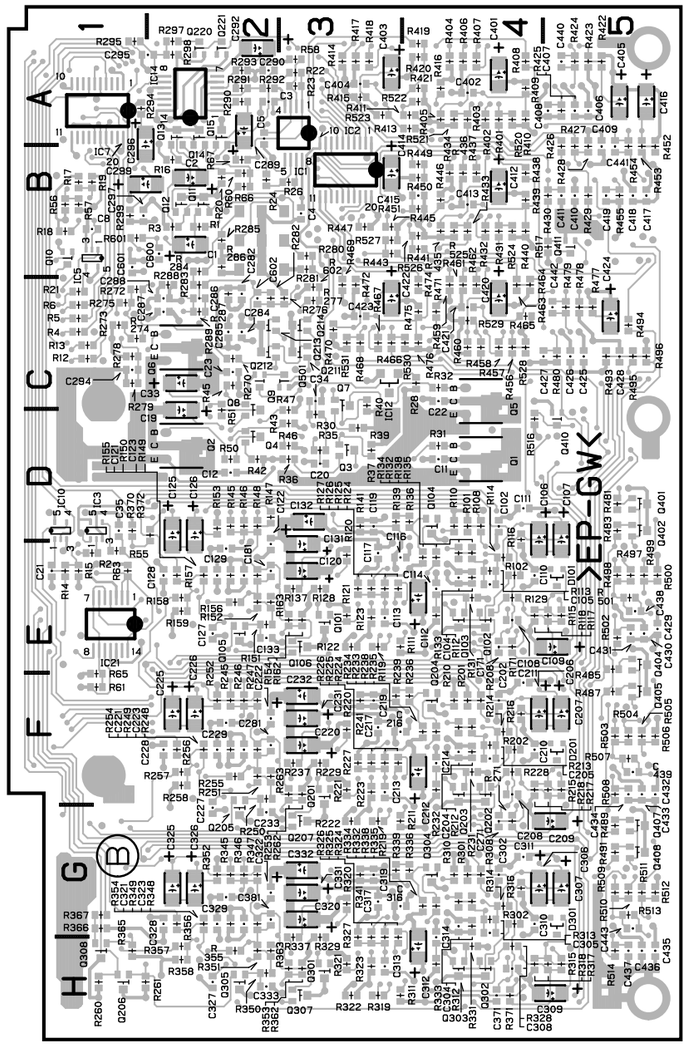

MX-59 -B SIDE-
1-660-229-12

MX-59 (1-660-229-11)

CN1	E1	C284	*C2	DL1	B2	Q206	*H1
		C285	*C2	DL2	B2	Q207	*G3
C1	*B2	C286	*C2	DL3	B2	Q211	*C3
C2	*B2	C287	*C2			Q212	*C2
C3	*A2	C288	*C2	D101	*E5	Q213	*C2
C4	*B3	C289	*A2	D201	*F5	Q214	*C3
C5	*A2	C290	*A2	D301	*G5	Q220	*A2
C8	*B1	C291	B1			Q221	*A2
C11	*D4	C292	*A2	E1	H5	Q301	*H3
C12	*D2	C293	C2			Q302	*H4
C13	D4	C294	*C1	IC1	*A3	Q303	*H4
C14	D2	C295	*A2	IC2	*A3	Q304	*G4
C16	D3	C296	*A1	IC3	*D1	Q305	*H2
C17	D2	C297	*B1	IC5	*B1	Q307	*H3
C18	D4	C298	B1	IC6	A1	Q308	*H1
C19	*D2	C299	*B1	IC7	*A1	Q401	*D5
C20	*D3	C302	*G4	IC8	A1	Q402	*D5
C21	*E1	C303	H4	IC9	D2	Q403	D5
C22	*C4	C304	*G4	IC10	*D1	Q404	*E5
C23	*C2	C305	*G4	IC11	B1	Q405	*F5
C26	D4	C306	*G4	IC12	*C3	Q406	F5
C27	C2	C307	*G5	IC14	*A2	Q407	*G5
C29	D3	C308	*H4	IC21	*E1	Q408	*G5
C30	C2	C309	*H5	IC100	A2	Q409	G5
C32	D4	C310	*G4	IC101	D4	Q410	*D5
C33	*C2	C311	*G4	IC102	D4	Q411	*B5
C34	*C3	C312	*H4	IC103	E3	Q501	*C3
C35	*D1	C313	*H3	IC104	D4		
C102	*D4	C314	*H4	IC105	D2	RV1	B2
C103	E4	C315	G3	IC106	D2	RV101	E4
C104	*E4	C316	*G3	IC107	E5	RV102	E3
C105	*E4	C317	*G3	IC108	E2	RV103	E3
C106	*D4	C318	G3	IC201	F4	RV104	E2
C107	*D5	C319	*G3	IC202	F4	RV201	G4
C108	*E4	C320	*G3	IC203	F3	RV202	G3
C109	*E5	C321	*G2	IC204	F4	RV203	F3
C110	*E4	C322	*G2	IC205	F2	RV204	G2
C111	*D4	C323	*G2	IC206	F2	RV210	B2
C112	*E4	C325	*G2	IC207	F5	RV301	H4
C113	*E3	C326	*G2	IC208	F2	RV302	H3
C114	*E4	C327	*H2	IC210	C1	RV303	G3
C115	E3	C328	*G2	IC211	C3	RV304	H2
C116	*E3	C329	*G2	IC212	C2	RV401	C5
C117	*E3	C330	*H2	IC213	B1		
C118	D3	C331	*G3	IC301	G4	R1	*B2
C119	*D3	C332	*G3	IC302	G4	R2	*E1
C120	*E3	C333	*H2	IC303	G3	R3	*B2
C121	*E2	C371	*H4	IC304	G4	R4	*C1
C122	*E2	C381	*G2	IC305	G2	R5	*C1
C123	*E2	C401	*A4	IC306	G2	R6	*C1
C125	*D2	C402	*A4	IC307	H5	R7	C1
C126	*D2	C403	*A3	IC308	H2	R8	C1
C127	*E2	C404	*A3	IC401	A4	R9	C1
C128	*E2	C405	*A5	IC402	A3	R10	C1
C129	*E2	C406	*A5	IC403	A5	R11	C1
C130	*E2	C407	*A5	IC404	B5	R12	*C1
C131	*E3	C408	*A5	IC405	B5	R13	*C1
C132	*D3	C409	*B5	IC406	B5	R14	*E1
C133	*E2	C410	*B5	IC407	B4	R15	*E1
C171	*E4	C411	*B5	IC408	B3	R16	*B2
C181	*E2	C412	*B4	IC409	B5	R17	*B1
C202	*F4	C413	*B4	IC410	C4	R18	*B1
C203	F4	C414	*B3	IC411	C3	R19	*B1
C204	*F4	C415	*B4	IC412	C5	R20	*B2
C205	*F4	C416	*A5	IC413	E5	R21	*C1
C206	*F4	C417	*B5	IC414	F5	R22	*A3
C207	*F5	C418	*B5	IC415	G5	R23	*A3
C208	*F4	C419	*B5	IC416	C5	R24	*B2
C209	*G5	C420	*C4	IC417	B1	R25	C1
C210	*F4	C421	*C4			R26	*B3
C211	*F4	C422	*C3	Q1	*D4	R27	D3
C212	*F4	C423	*C3	Q2	*D2	R28	*C4
C213	*F3	C424	*C5	Q3	*D3	R29	D3
C214	*F4	C425	*C5	Q4	*D2	R30	*D3
C215	F3	C426	*C5	Q5	*C4	R31	*D4
C216	*F3	C427	*C5	Q6	*C2	R32	*C4
C217	*F3	C428	*C5	Q7	*C3	R33	D3
C218	F3	C429	*E5	Q8	*D2	R34	D3
C219	*F3	C430	*E5	Q9	*C2	R35	*D3
C220	*F3	C431	*E5	Q10	*B1	R36	*D3
C221	*F2	C432	*F5	Q11	*B2	R37	*D3
C222	*F2	C433	*F5	Q12	*B2	R38	D3
C223	*F2	C434	*F5	Q13	*A2	R39	*D3
C225	*F2	C435	*H5	Q14	*A2	R40	*C3
C226	*F2	C436	*H5	Q15	*A2	R41	D3
C227	*G2	C437	*H5	Q101	*E3	R42	*D2
C228	*F2	C438	*E5	Q102	*E4	R43	*D3
C229	*F2	C439	*F5	Q103	*E4	R44	D2
C230	*G2	C440	*A5	Q104	*D4	R45	*C2
C231	*F3	C441	*B5	Q105	*E2	R46	*D3
C232	*F3	C442	*C5	Q106	*E3	R47	*D3
C233	*G2	C443	*G5	Q201	*F3	R48	D2
C271	*G4	C600	*B2	Q202	*F4	R49	C2
C281	*F2	C601	*B1	Q203	*F4	R50	*D2
C282	*C2	C602	*C2	Q204	*F4	R51	*D2
C283	C3			Q205	*G2	R52	D2

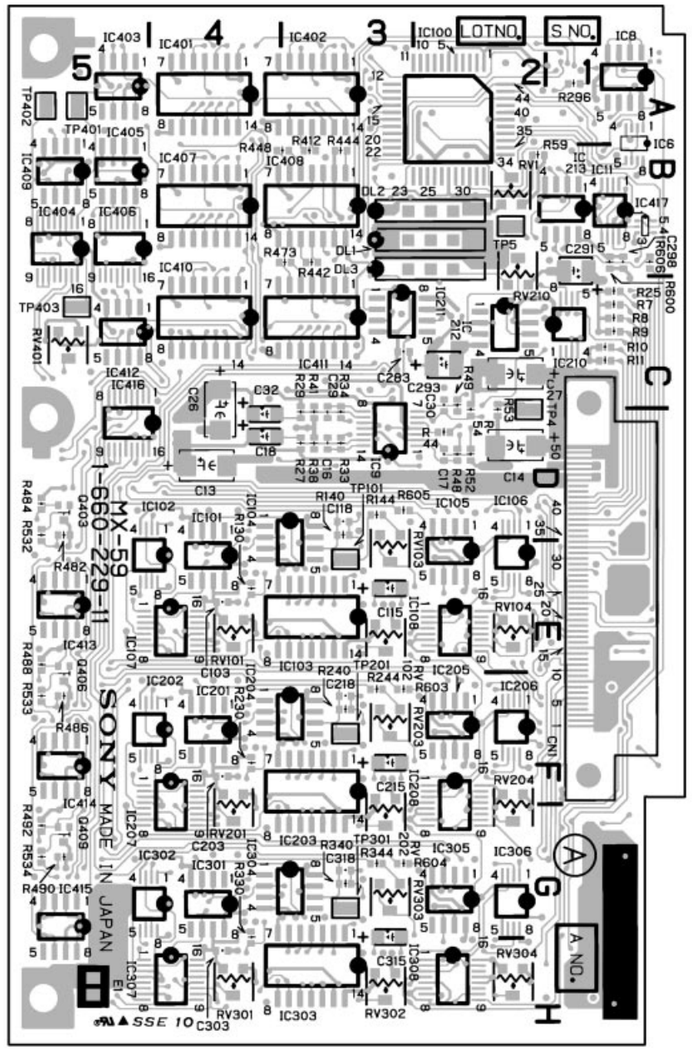

HDC-700 : S/N 10001 through 10042
HDC-750 : S/N 10001 through 10085

MX-59 -A SIDE-
1-660-229-11

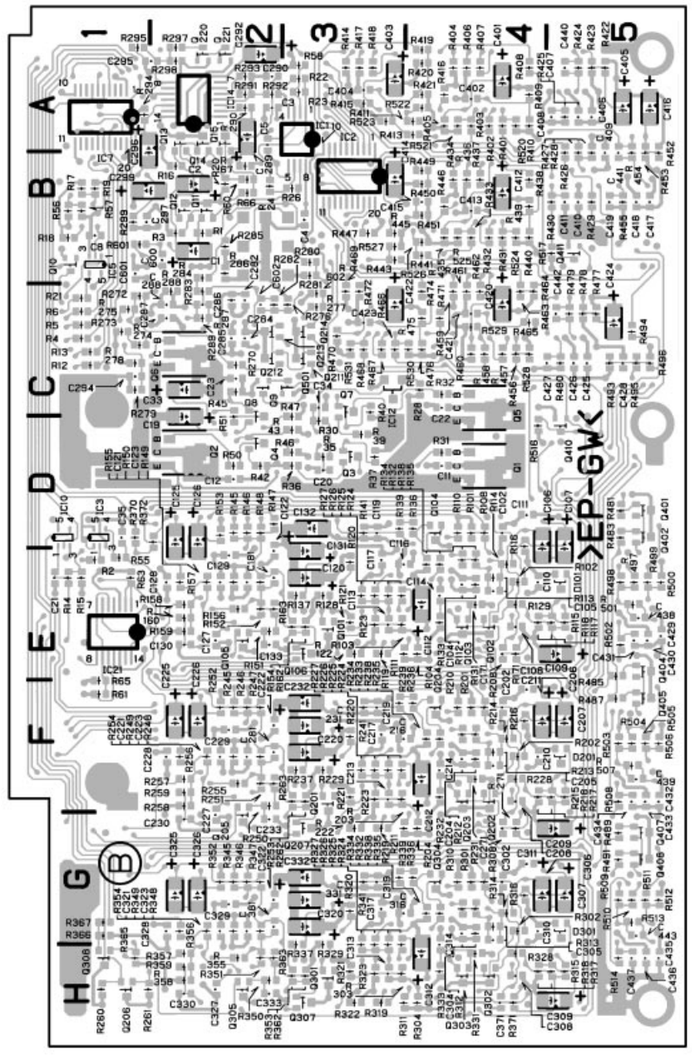

MX-59 -B SIDE-
1-660-229-11

R53	D2	R231	*F4	R340	G3	R471	*C4
R54	D2	R232	*F4	R341	*G3	R472	*C3
R55	*E1	R233	*F4	R344	G3	R473	B3
R56	*B1	R234	*F4	R345	*G2	R474	*C4
R57	*B1	R235	*F4	R346	*G2	R475	*C4
R58	*A3	R236	*F4	R347	*G2	R476	*C4
R59	B2	R237	*F3	R348	*G2	R477	*C5
R60	*B2	R238	*F4	R349	*G2	R478	*C5
R61	*F1	R239	*F3	R350	*H2	R479	*C5
R63	*E1	R240	F3	R351	*H2	R480	*C5
R65	*F1	R241	*F3	R352	*G2	R481	*D5
R66	*B2	R244	F3	R353	*H3	R482	D5
R67	*B2	R245	*F2	R354	*G2	R483	*D5
R101	*D4	R246	*F2	R355	*H2	R484	D5
R102	*E4	R247	*F2	R356	*G2	R485	*E5
R103	*E3	R248	*F2	R357	*H2	R486	F5
R104	*E4	R249	*F2	R358	*H2	R487	*F5
R108	*D4	R250	*F2	R359	*H2	R488	E5
R110	*D4	R251	*F2	R362	*H3	R489	*G5
R111	*E3	R252	*F2	R363	*H2	R490	G5
R112	*E4	R253	*F3	R365	*H1	R491	*G5
R113	*E4	R254	*F2	R366	*G1	R492	G5
R114	*E4	R255	*F2	R367	*G1	R493	*C5
R115	*E5	R256	*F2	R370	*D1	R494	*C5
R116	*D4	R257	*F2	R371	*H4	R495	*C5
R117	*E5	R258	*F2	R372	*D2	R496	*C5
R118	*E4	R259	*F2	R401	*A4	R497	*E5
R119	*E3	R260	*H1	R402	*A4	R498	*E5
R120	*E3	R261	*H1	R403	*A4	R499	*E5
R121	*E3	R262	*F3	R404	*A4	R500	*E5
R122	*E3	R263	*F2	R405	*A4	R501	*E5
R123	*E3	R270	*C2	R406	*A4	R502	*E5
R124	*E3	R271	*G4	R407	*A4	R503	*F5
R125	*E3	R272	*C1	R408	*A4	R504	*F5
R126	*E3	R273	*C1	R409	*A4	R505	*F5
R127	*E3	R274	*C1	R410	*A4	R506	*F5
R128	*E3	R275	*C1	R411	*A4	R507	*F5
R129	*E4	R276	*C3	R412	B3	R508	*F5
R130	E4	R277	*C3	R413	*A4	R509	*G5
R131	*E4	R278	*C1	R414	*A3	R510	*G5
R132	*E4	R279	*C1	R415	*A3	R511	*G5
R133	*E4	R280	*B3	R416	*A4	R512	*G5
R134	*E4	R281	*B3	R417	*A3	R513	*G5
R135	*E4	R282	*C2	R418	*A3	R514	*H5
R136	*D4	R283	*C2	R419	*A4	R516	*D4
R137	*E3	R284	*B2	R420	*A4	R517	*B5
R138	*E4	R285	*B2	R421	*A4	R520	*A4
R139	*D3	R286	*B2	R422	*A5	R521	*A4
R140	D3	R287	*C2	R423	*A5	R522	*A4
R141	*D3	R288	*C2	R424	*A5	R523	*A3
R144	D3	R289	*C2	R425	*A5	R524	*B4
R145	*D2	R290	*A2	R426	*B5	R525	*B4
R146	*D2	R291	*A2	R427	*B5	R526	*B4
R147	*D2	R292	*A2	R428	*B5	R527	*B3
R148	*D2	R293	*A2	R429	*B5	R528	*C4
R149	*E2	R294	*A1	R430	*B5	R529	*C4
R150	*E2	R295	*A1	R431	*B4	R530	*C4
R151	*E2	R296	A1	R432	*B4	R531	*C3
R152	*E2	R297	*A2	R433	*B4	R532	D5
R153	*D2	R298	*A2	R434	*B4	R533	F5
R154	*E3	R299	*B1	R435	*B4	R534	G5
R155	*E2	R301	*G4	R436	*B4	R600	B1
R156	*E2	R302	*G4	R437	*B4	R601	*B1
R157	*E2	R303	*H3	R438	*B4	R602	*C3
R158	*E2	R304	*H4	R439	*B4	R603	F3
R159	*E2	R308	*G4	R440	*B4	R604	G3
R160	*E2	R310	*G4	R441	*B4	R605	D3
R162	*E3	R311	*H3	R442	B3	R606	B1
R163	*E2	R312	*G4	R443	*B3		
R171	*E4	R313	*G4	R444	B3	TP4	D2
R201	*F4	R314	*G4	R445	*B3	TP5	B2
R202	*F4	R315	*H5	R446	*B4	TP101	E3
R203	*F3	R316	*G4	R447	*B3	TP201	F3
R204	*G4	R317	*H5	R448	B3	TP301	G3
R208	*F4	R318	*H4	R449	*B4	TP401	A5
R210	*F4	R319	*H3	R450	*B4	TP402	A5
R211	*G3	R320	*G3	R451	*B4	TP403	C5
R212	*F4	R321	*H3	R452	*B5		
R213	*F4	R322	*H3	R453	*B5	*:B SIDE	
R214	*F4	R323	*H3	R454	*B5		
R215	*F5	R324	*H3	R455	*B5		
R216	*F4	R325	*H3	R456	*C4		
R217	*F5	R326	*H3	R457	*C4		
R218	*F4	R327	*H3	R458	*C4		
R219	*G3	R328	*H4	R459	*C4		
R220	*F3	R329	*H3	R460	*C4		
R221	*F3	R330	G4	R461	*C4		
R222	*G3	R331	*H4	R462	*C4		
R223	*F3	R332	*G4	R463	*C4		
R224	*F3	R333	*H4	R464	*C4		
R225	*F3	R334	*G4	R465	*C4		
R226	*F3	R335	*G4	R466	*C3		
R227	*F3	R336	*G4	R467	*C3		
R228	*F4	R337	*H3	R468	*C3		
R229	*F3	R338	*G4	R469	*C3		
R230	F4	R339	*G3	R470	*C3		

http://getMANUAL.com

PR-200 (1-660-230-12)

CN1	E1	C242	*D3	C615	*H4	IC209	C2	Q417	F2	R104	B3	R245	C4	R431	*F4	R615	H5
		C243	*D3	C616	*H5	IC210	*C3	Q601	H5	R105	*B3	R246	C4	R433	*F4	R616	*G5
C1	C1	C244	C2	C617	G5	IC211	D3	Q602	H5	R106	*B3	R247	C4	R434	*F4	R617	*G5
C2	*C5	C245	*C2	C619	F5	IC212	*C2	Q603	G5	R107	*B4	R248	*C3	R436	*F4	R618	*G5
C3	*C5	C247	*D2	C620	G4	IC213	*D3	Q604	*F5	R108	B4	R249	C4	R437	*E5	R619	*G5
C4	C5	C248	*D2	C621	*G4	IC215	*D2	Q605	*F5	R109	*B4	R250	*C3	R438	E5	R620	*G5
C5	B5	C249	*D2	C623	*H4	IC401	*F5	Q606	*F4	R110	B4	R251	C3	R439	E5	R621	*G5
C6	B5	C250	D2	C624	H3	IC402	E4	Q607	*F5	R111	*C4	R253	*C3	R440	*E5	R623	*H4
C7	D2	C251	*D2	C625	*G4	IC403	*E5	Q608	*G3	R112	*C3	R254	*C3	R441	E5	R624	*H4
C8	*B4	C252	D2	C626	*G4	IC404	*E4	Q609	*G3	R113	*B1	R256	*C3	R442	E5	R625	*H5
C9	B4	C253	D2	C627	H4	IC405	F4	Q610	G3	R114	B1	R257	*D4	R443	E5	R626	*H4
C10	C4	C254	D2	C628	*H3	IC407	E3	Q611	*G3	R116	*B1	R258	*D4	R444	E5	R627	*H4
C11	*C4	C255	*D2	C629	*G3	IC408	*F4	Q612	G2	R117	*C1	R259	D4	R445	E4	R628	*H4
C12	*C4	C256	*D2	C630	H3	IC409	E2	Q613	H1	R118	*A1	R260	D4	R446	E4	R629	*H4
C13	B4	C257	C2	C631	G3	IC410	*E3			R119	A1	R261	D4	R447	E4	R630	*H4
C14	B4	C258	C2	C632	*G3	IC411	*E3	RV2	B2	R120	*A4	R262	D3	R448	*E4	R631	*H4
C15	*F1	C259	*C2	C633	*F3	IC412	*G1	RV3	B3	R121	*A1	R263	*D3	R449	E4	R633	*H4
C16	*E1	C260	E2	C634	G3	IC413	F3	RV204	D3	R122	A1	R264	D3	R450	*E4	R634	*G4
C17	F2	C263	D2	C635	G3	IC414	*E2	RV206	D2	R123	*B1	R265	D3	R451	E3	R635	*G4
C18	*F1	C264	*C4	C636	*G3	IC415	*F3	RV404	E4	R124	*B1	R266	*C3	R453	*E4	R637	*G5
C19	*E1	C300	*E4	C638	G3	IC417	*F2	RV406	F2	R125	*C1	R267	D3	R454	*E4	R638	G5
C20	*B4	C401	F5	C639	*G3	IC601	*H5	RV604	G4	R126	*B1	R268	*C2	R456	*E4	R639	G5
C27	H2	C402	F5	C640	*H3	IC602	G4	RV606	H2	R127	*B1	R269	*C3	R457	*F4	R640	*G5
C34	*B2	C403	*E5	C641	*G3	IC603	*G5			R128	*A1	R270	*C3	R458	*F4	R641	G5
C35	C1	C404	*F5	C642	*H3	IC604	*G4	R1	C1	R129	*B1	R271	*D3	R459	F4	R642	G5
C36	*C2	C405	E5	C643	*H3	IC605	H4	R2	*C5	R130	C1	R272	*D3	R460	F4	R643	G5
C37	B2	C406	E5	C644	G2	IC607	G3	R3	*B5	R131	*A4	R273	*D2	R461	F4	R644	G5
C38	*C2	C407	E5	C645	*G2	IC608	*H4	R4	*B5	R132	*A1	R274	D3	R462	F4	R645	G4
C39	B3	C408	*E5	C647	*H3	IC609	G2	R5	C1	R133	A2	R275	*C2	R463	*F3	R646	G4
C40	*B3	C409	*E5	C648	*G3	IC610	*G3	R6	*C5	R134	A2	R276	D3	R464	F3	R647	G4
C41	*C3	C411	E4	C649	*H2	IC611	H3	R7	*B5	R136	A1	R278	D3	R466	*E3	R649	G4
C42	*B3	C412	*F4	C650	H2	IC612	*G2	R8	*B5	R137	A2	R279	C3	R467	*E3	R650	*G4
C43	*B3	C413	*F4	C651	*H2	IC613	*H3	R9	*C5	R138	A2	R280	C3	R468	*E3	R651	G3
C44	*B4	C414	*F4	C652	H2	IC615	*H2	R10	*B5	R139	A2	R281	*D3	R469	F3	R653	*G4
C45	*B4	C415	*F4	C653	H2			R11	*B5	R140	*A4	R282	*D3	R470	*E3	R654	*F4
C46	*C3	C416	*F5	C654	H2	Q1	B4	R12	*B5	R141	*B2	R283	*C3	R471	*E3	R655	*F3
C47	C4	C417	E5	C655	*H2	Q2	B4	R13	B5	R142	*B2	R284	*D3	R472	*E3	R657	*H4
C48	*C3	C419	E5	C656	*H2	Q3	B5	R14	B5	R143	*A2	R285	*D3	R473	*E3	R658	*H4
C49	*B1	C420	E4	C657	G2	Q4	*B5	R15	*C5	R144	*A2	R286	*D3	R474	*F3	R659	H4
C50	B1	C421	*E4	C658	G2	Q5	*B5	R16	*B5	R145	*A2	R287	*D3	R475	*E3	R660	H4
C51	A5	C423	*F4	C659	*G2	Q11	*B2	R17	B4	R146	*A2	R288	*D3	R476	*E3	R661	H4
C52	*B1	C424	F4	C660	H1	Q12	*B3	R18	B5	R147	*A4	R289	*D3	R477	E3	R662	H3
C53	*A1	C425	*F4	C663	H2	Q13	*B2	R19	B5	R148	*D1	R290	C2	R478	E2	R663	*H3
C54	*A1	C426	*F4	C664	*G4	Q14	*B2	R20	B5	R149	*D1	R291	C2	R479	F3	R664	H3
C55	*B1	C427	F4	C700	*H4	Q15	*B2	R21	B5	R150	*D1	R292	C2	R480	E3	R665	G3
C56	*A5	C428	*F3			Q16	*C2	R22	B5	R151	*D1	R293	C2	R481	F4	R666	*F3
C57	*B1	C429	F3	D1	C2	Q17	C2	R23	*F1	R152	*D1	R295	*D2	R482	E2	R667	H3
C58	*B2	C430	*F3	D201	D5	Q18	C2	R24	*B4	R153	*D1	R296	*D3	R483	E2	R668	*G3
C59	B1	C431	E3	D202	D4	Q19	B2	R25	*B4	R154	*A3	R297	D2	R484	*F3	R669	*G3
C60	B2	C432	*E3	D203	D3	Q20	B2	R26	*B4	R155	*A3	R298	D2	R485	*F3	R670	*G3
C61	*B1	C433	*E3	D204	*D2	Q21	B3	R27	B4	R156	*A3	R299	*D2	R486	*E3	R671	*G3
C62	*A1	C434	E3	D401	F5	Q22	*B3	R28	B4	R157	*A3	R300	D2	R487	*F3	R672	*G3
C63	*A4	C435	E3	D402	F5	Q23	*B3	R29	*B4	R158	*A3	R301	D2	R488	*F3	R673	*G3
C64	*B2	C436	E3	D403	E3	Q24	B3	R30	*F1	R159	*A3	R302	D2	R489	*F3	R674	G3
C65	*A2	C437	*G1	D404	*F2	Q25	B3	R31	*F1	R201	D5	R303	D2	R490	*F3	R675	*G3
C66	*A1	C438	E3	D601	H5	Q26	*B3	R32	B4	R202	D5	R304	*D2	R491	*F3	R676	H3
C67	A4	C439	E3	D602	H5	Q27	B1	R33	B4	R203	*D5	R305	*D2	R492	*F3	R677	G3
C69	B5	C441	E3	D603	G3	Q28	B1	R34	C5	R204	*D5	R306	D2	R493	E2	R678	H4
C70	*B5	C442	*F3	D604	H1	Q29	C1	R35	*C4	R205	*D5	R307	C2	R494	E2	R679	G3
C201	D5	C443	*F3			Q30	*B1	R36	*C4	R206	D5	R308	*C2	R495	E2	R680	G3
C202	D5	C444	*E2	DL201	D2	Q31	A1	R37	B4	R207	*D5	R309	D2	R496	E2	R681	*G3
C203	*D5	C445	*F3	DL401	E2	Q32	A1	R38	*E1	R208	*D5	R310	*D2	R498	*F3	R682	*H3
C204	*D5	C446	*F3	DL601	G2	Q33	A1	R39	*E1	R209	*D5	R311	*E2	R499	*F3	R683	*F3
C205	C5	C447	E2			Q34	A2	R71	*B2	R210	*C4	R326	D2	R500	F2	R684	*H3
C206	C5	C448	*E2	E1	H5	Q35	A1	R72	*B2	R211	*C4	R327	D2	R501	F2	R685	*H3
C207	C5	C450	*F3			Q36	A2	R73	*B2	R212	D5	R328	*D2	R502	*F2	R686	*H3
C208	*C5	C451	*E3	IC1	C1	Q37	*C1	R74	B2	R213	D5	R401	F5	R503	F2	R687	*H3
C209	*C5	C452	*F2	IC2	B5	Q201	D5	R75	*B2	R214	D5	R402	F5	R504	F2	R688	*G3
C211	C4	C453	F2	IC4	*B4	Q202	D4	R76	*B2	R215	D4	R403	*F5	R505	F2	R689	*H3
C212	*D4	C454	*F2	IC5	B4	Q203	D4	R77	*C2	R216	*D5	R404	F5	R506	*E2	R690	G2
C213	*D4	C455	F2	IC11	*C2	Q204	*C5	R78	*C2	R217	*C5	R405	*F5	R507	*E2	R691	G2
C214	*D4	C456	F2	IC12	C3	Q205	*C5	R79	*C2	R218	*D5	R406	F5	R508	*F2	R692	G2
C215	*D4	C457	F2	IC13	B3	Q206	*C4	R80	C2	R219	*D5	R407	*F5	R509	F2	R693	G2
C216	*D5	C458	*F2	IC14	*B1	Q207	*C5	R81	*C2	R220	*C5	R408	*F5	R510	E2	R695	*H2
C217	D5	C459	*F2	IC15	B1	Q208	*D3	R82	*C2	R221	*C5	R409	*E5	R511	*E2	R696	*G3
C219	C5	C460	E2	IC16	*E1	Q209	*D3	R83	*B2	R223	*D4	R410	*E5	R512	F2	R697	H2
C220	C4	C461	E2	IC17	A5	Q210	C3	R84	*B2	R224	*D4	R411	*E4	R513	*F2	R698	G2
C221	*C3	C462	*E2	IC18	*A5	Q211	*C2	R85	B2	R225	*D4	R412	F5	R514	*F2	R699	*H2
C223	*D4	C463	F2	IC19	A4	Q212	C2	R86	C2	R226	*D4	R413	F5	R529	F2	R700	G2
C224	D3	C464	*E4	IC20	*A4	Q213	E2	R87	B2	R227	*D4	R414	F5	R530	F2	R701	G2
C225	*D4	C465	*H1	IC21	A3	Q401	F5	R88	B2	R228	*D4	R415	F5	R531	*E2	R702	H2
C226	*D4	C466	F2	IC22	*B1	Q402	F5	R89	B2	R229	*D4	R416	*E5	R601	H5	R703	*G2
C227	D3	C500	*F4	IC23	*A1	Q403	F5	R90	B2	R230	*D4	R417	*E5	R602	H5	R704	*G2
C228	*D3	C601	G5	IC24	*A2	Q404	*F5	R91	B2	R231	*D4	R418	*E5	R603	*H5	R705	*H2
C229	*D3	C602	H5	IC25	*A4	Q405	*F5	R92	B3	R233	*D4	R419	*E5	R604	G5	R706	H2
C230	D3	C603	*G5	IC26	*A4	Q406	*E5	R93	B2	R234	*D4	R420	*E5	R605	*G5	R707	G2
C231	C3	C604	*H5	IC27	*A4	Q407	*E5	R94	B2	R236	*D4	R421	*E5	R606	G5	R708	*G2
C232	*C3	C605	G5	IC28	*B4	Q408	*E4	R95	C2	R237	*C5	R423	*F4	R607	*G5	R709	H1
C233	*C3	C606	G5	IC29	*F1	Q409	*E5	R96	*C3	R238	C5	R424	*F4	R608	*H5	R710	H1
C234	C3	C607	G5	IC201	*D5	Q410	F5	R97	*B3	R239	C5	R425	*F5	R609	*G5	R711	H1
C235	C3	C608	*G5	IC202	D4	Q411	F5	R98	*B3	R240	*C5	R426	*F4	R610	*G4	R726	G2
C236	*C2	C609	*G5	IC203	*C5	Q412	*E3	R99	*B3	R241	C4	R427	*F4	R611	*G4	R727	H2
C238	C3	C611	G4	IC204	*C4	Q413	*E3	R100	*B3	R242	C4	R428	*F4	R612	G5	R728	*G2
C239	*D3	C612	*G4	IC205	D4	Q414	E3	R101	*B3	R243	C5	R429	*F4	R613	H5		
C240	*D3	C613	*H4	IC207	C3	Q415	*E3	R102	*B3	R244	C5	R430	*F4	R614	G5	TH401	*E3
C241	*C3	C614	*G4	IC208	*D4	Q416	E2	R103	B4								

*:B SIDE

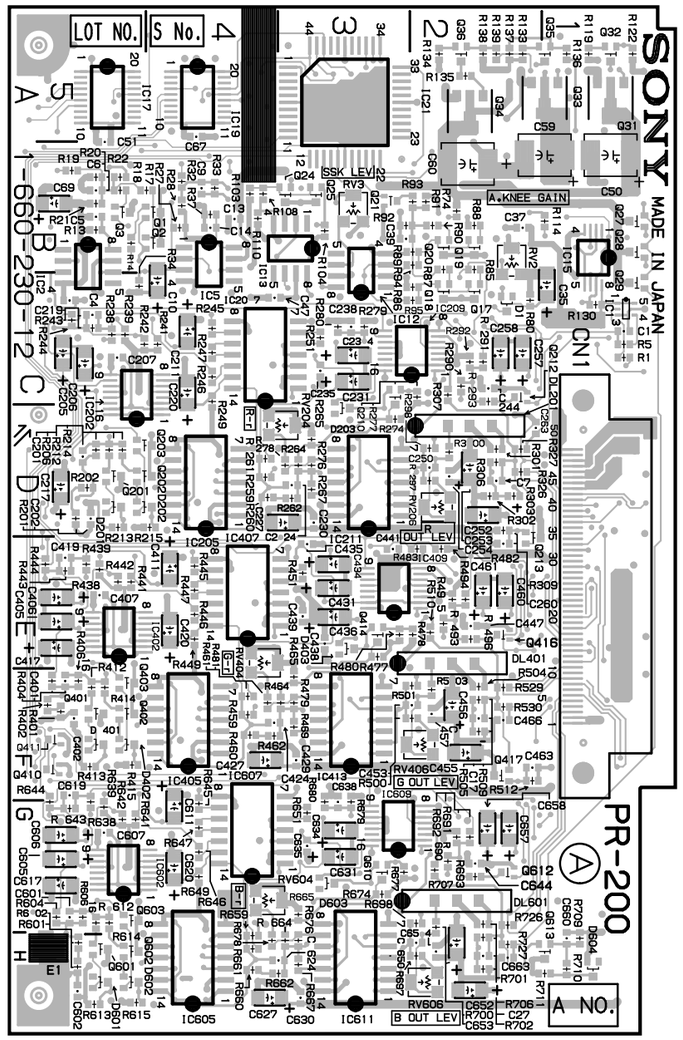

HDC-700 : S/N 10043 and Higher
HDC-750 : S/N 10086 and Higher

PR-200 -A SIDE-
1-660-230-12

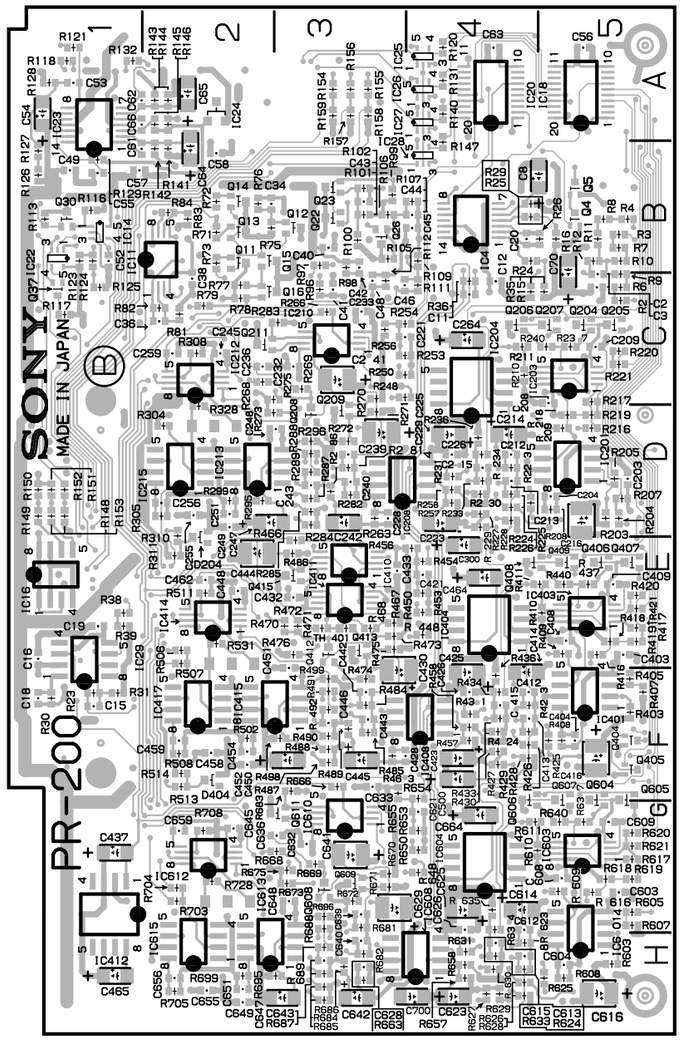

PR-200 -B SIDE-
1-660-230-12

PR-200 (1-660-230-11)

CN1	E1	C252	D2	C634	G3	IC604	*G4
		C253	D2	C635	G3	IC605	H4
C1	C1	C254	D2	C636	*G3	IC607	G3
C3	*C5	C255	*D2	C638	G3	IC608	*H4
C4	C5	C256	*D2	C641	*G3	IC609	G2
C5	B5	C257	C2	C642	*H3	IC610	*G3
C6	B5	C258	C2	C643	*H3	IC611	H3
C7	D2	C259	*C2	C644	G2	IC612	*G2
C8	*B4	C260	E2	C645	*G2	IC613	*H3
C9	B4	C263	D2	C647	*H3	IC615	*H2
C10	C4	C264	*C4	C648	*G3		
C12	*C4	C401	F5	C649	*H2	Q1	B4
C13	B4	C402	F5	C650	H2	Q2	B4
C14	B4	C403	*E5	C651	*H2	Q3	B5
C16	*E1	C404	*F5	C652	H2	Q4	*B5
C17	F2	C405	E5	C653	H2	Q5	*B5
C18	*F1	C406	E5	C654	H2	Q11	*B2
C19	*E1	C407	E5	C655	*H2	Q12	*B3
C27	H2	C408	*E5	C656	*H2	Q13	*B2
C34	*B2	C409	*E5	C657	G2	Q14	*B2
C35	C1	C411	E4	C658	G2	Q15	*B2
C36	*C2	C414	*F4	C659	*G2	Q16	*C2
C37	B2	C415	*F4	C660	H1	Q17	C2
C38	*C2	C416	*F5	C663	H2	Q18	C2
C39	B3	C417	E5	C664	*G4	Q19	B2
C40	*B3	C419	E5			Q20	B2
C41	*C3	C420	E4	D1	C2	Q21	B3
C42	*B3	C421	*E4	D201	D5	Q22	*B3
C43	*B3	C423	*F4	D202	D4	Q23	*B3
C44	*B4	C424	F4	D203	D3	Q24	B3
C45	*B4	C425	*F4	D204	*D2	Q25	B3
C47	C4	C426	*F4	D401	F5	Q26	*B3
C48	*C3	C427	F4	D402	F5	Q27	B1
C49	*B1	C428	*F3	D403	E3	Q28	B1
C50	B1	C429	F3	D404	*F2	Q29	C1
C51	A5	C430	*F3	D601	H5	Q30	*B1
C52	*B1	C431	E3	D602	H5	Q31	A1
C53	*A1	C432	*E3	D603	G3	Q32	A1
C54	*A1	C433	*E3	D604	H1	Q33	A1
C55	*B1	C434	E3			Q34	A2
C56	*A5	C435	E3	E1	H5	Q35	A1
C57	*B1	C436	E3			Q36	A2
C58	*B2	C437	*G1	IC1	C1	Q37	*C1
C59	B1	C438	E3	IC2	B5	Q201	D5
C60	B2	C439	E3	IC4	*B4	Q202	D4
C61	*B1	C441	E3	IC5	B4	Q203	D4
C62	*A1	C444	*E2	IC11	*C2	Q204	*C5
C63	*A4	C445	*F3	IC12	C3	Q205	*C5
C64	*B2	C446	*F3	IC13	B3	Q206	*C4
C65	*A2	C447	E2	IC14	*B1	Q207	*C5
C66	*A1	C448	*E2	IC15	B1	Q208	*D3
C67	A4	C450	*F3	IC16	*E1	Q209	*D3
C69	B5	C451	*E3	IC17	A5	Q210	C3
C70	*B5	C452	*F2	IC18	*A5	Q211	*C2
C201	D5	C453	F2	IC19	A4	Q212	C2
C202	D5	C454	*F2	IC20	*A4	Q213	E2
C203	*D5	C455	F2	IC21	A3	Q401	F5
C204	*D5	C456	F2	IC22	*B1	Q402	F5
C205	C5	C457	F2	IC23	*A1	Q403	F5
C206	C5	C458	*F2	IC24	*A2	Q404	*F5
C207	C5	C459	*F2	IC25	*A4	Q405	*F5
C208	*C5	C460	E2	IC26	*A4	Q406	*E5
C209	*C5	C461	E2	IC27	*A4	Q407	*E5
C211	C4	C462	*E2	IC28	*B4	Q408	*E4
C214	*D4	C463	F2	IC29	*F1	Q409	*E5
C215	*D4	C464	*E4	IC201	*D5	Q410	F5
C216	*D5	C465	*H1	IC202	D4	Q411	F5
C217	D5	C466	F2	IC203	*C5	Q412	*E3
C219	C5	C601	G5	IC204	*C4	Q413	*E3
C220	C4	C602	H5	IC205	D4	Q414	E3
C221	*C3	C603	*G5	IC207	C3	Q415	*E3
C223	*D4	C604	*H5	IC208	*D4	Q416	E2
C224	D3	C605	G5	IC209	C2	Q417	F2
C225	*D4	C606	G5	IC210	*C3	Q601	H5
C226	*D4	C607	G5	IC211	D3	Q602	H5
C227	D3	C608	*G5	IC212	*C2	Q603	G5
C228	*D3	C609	*G5	IC213	*D3	Q604	*F5
C229	*D3	C611	G4	IC215	*D2	Q605	*F5
C230	D3	C614	*G4	IC401	*F5	Q606	*F4
C231	C3	C615	*H4	IC402	E4	Q607	*F5
C232	*C3	C616	*H5	IC403	*E5	Q608	*G3
C233	*C3	C617	G5	IC404	*E4	Q609	*G3
C234	C3	C619	F5	IC405	F4	Q610	G3
C235	C3	C620	G4	IC407	E3	Q611	*G3
C236	*C2	C621	*G4	IC408	*F4	Q612	G2
C238	C3	C623	*H4	IC409	E2	Q613	H1
C241	*C3	C624	H3	IC410	*E3		
C242	*D3	C625	*G4	IC411	*E3	RV2	B2
C243	*D3	C626	*G4	IC412	*G1	RV3	B3
C244	C2	C627	H4	IC413	F3	RV204	D3
C245	*C2	C628	*H3	IC414	*E2	RV206	D2
C247	*D2	C629	*G3	IC415	*F3	RV404	E4
C248	*D2	C630	H3	IC417	*F2	RV406	F2
C249	*D2	C631	G3	IC601	*H5	RV604	G4
C250	D2	C632	*G3	IC602	G4	RV606	H2
C251	*D2	C633	*F3	IC603	*G5		

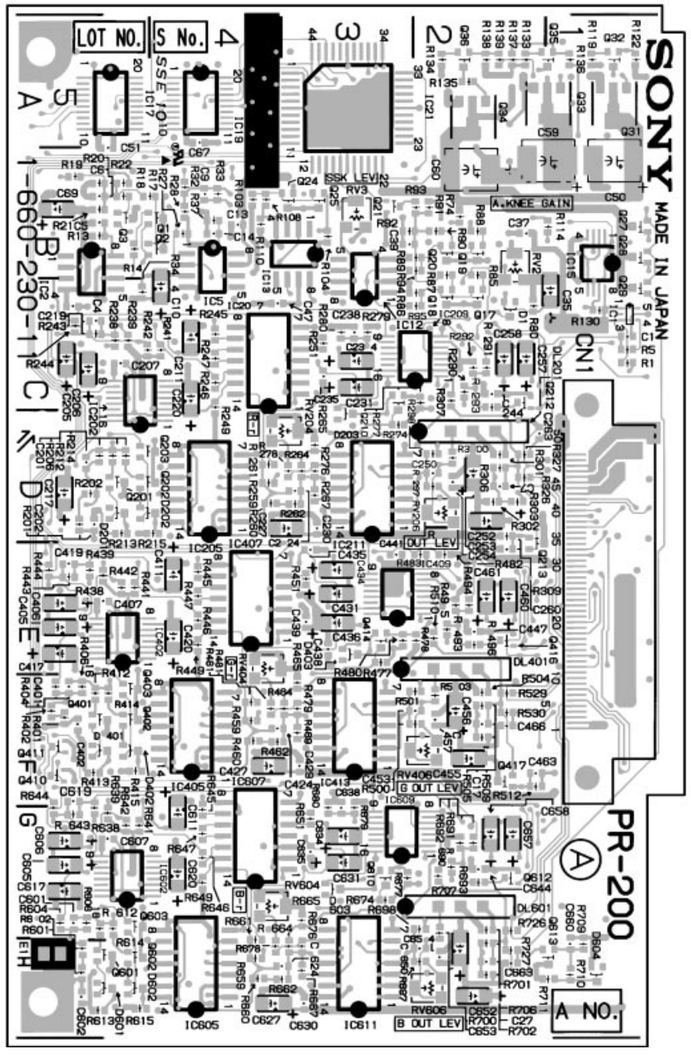

HDC-700 : S/N 10001 through 10042
HDC-750 : S/N 10001 through 10085

PR-200 -A SIDE-
1-660-230-11

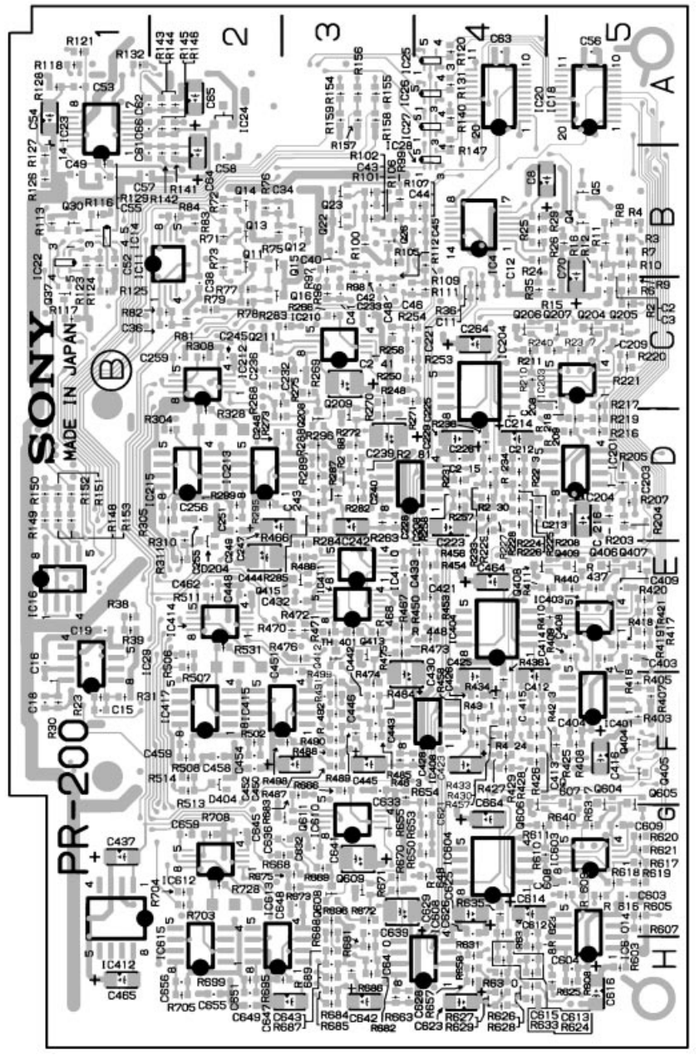

PR-200 -B SIDE-
1-660-230-11

R1	C1	R131	*A4	R274	D3	R463	*F3
R2	*C5	R132	*A1	R275	*C2	R464	F3
R3	*B5	R133	A2	R276	D3	R465	F3
R4	*B5	R134	A2	R277	C2	R466	*E3
R5	C1	R135	A2	R278	D3	R467	*E3
R6	*C5	R136	A1	R279	C3	R469	F3
R7	*B5	R137	A2	R280	C3	R470	*E3
R8	*B5	R138	A2	R281	*D3	R471	*E3
R9	*C5	R139	A2	R282	*D3	R472	*E3
R10	*B5	R140	*A4	R283	*C3	R473	*E3
R11	*B5	R141	*B2	R284	*D3	R474	*F3
R12	*B5	R142	*B2	R285	*D3	R475	*E3
R13	B5	R143	*A2	R286	*D3	R476	*E3
R14	B5	R144	*A2	R287	*D3	R477	E3
R15	*C5	R145	*A2	R288	*D3	R478	E2
R16	*B5	R146	*A2	R289	*D3	R479	F3
R17	B4	R147	*A4	R290	C2	R480	E3
R18	B5	R148	*D1	R291	C2	R481	F4
R19	B5	R149	*D1	R292	C2	R482	E2
R20	B5	R150	*D1	R293	C2	R483	E2
R21	B5	R151	*D1	R295	*D2	R484	*F3
R22	B5	R152	*D1	R296	*D3	R485	*F3
R23	*F1	R153	*D1	R297	D2	R486	*E3
R24	*B4	R154	*A3	R298	D2	R487	*F3
R25	*B4	R155	*A3	R299	*D2	R488	*F3
R26	*B4	R156	*A3	R300	D2	R489	*F3
R27	B4	R157	*A3	R301	D2	R490	*F3
R28	B4	R158	*A3	R302	D2	R491	*F3
R29	*B4	R159	*A3	R303	D2	R492	*F3
R30	*F1	R201	D5	R304	*D2	R493	E2
R31	*F1	R202	D5	R305	*D2	R494	E2
R32	B4	R203	*D5	R306	D2	R495	E2
R33	B4	R204	*D5	R307	C2	R496	E2
R34	C5	R205	*D5	R308	*C2	R498	*F3
R35	*C4	R206	D5	R309	D2	R499	*F3
R36	*C4	R207	*D5	R310	*D2	R500	F2
R37	B4	R208	*D5	R311	*E2	R501	F2
R38	*E1	R209	*D5	R326	D2	R502	*F2
R39	*E1	R211	*C4	R327	D2	R503	F2
R71	*B2	R212	D5	R328	*D2	R504	F2
R72	*B2	R213	D5	R401	F5	R505	F2
R73	*B2	R214	D5	R402	F5	R506	*E2
R74	B2	R215	D4	R403	*F5	R507	*E2
R75	*B2	R216	*D5	R404	F5	R508	*F2
R76	*B2	R217	*C5	R405	*F5	R509	F2
R77	*C2	R218	*D5	R406	F5	R510	E2
R78	*C2	R219	*D5	R407	*F5	R511	*E2
R79	*C2	R220	*C5	R408	*F5	R512	F2
R80	C2	R221	*C5	R409	*E5	R513	*F2
R81	*C2	R223	*D4	R411	*E4	R514	*F2
R82	*C2	R224	*D4	R412	F5	R529	F2
R83	*B2	R225	*D4	R413	F5	R530	F2
R84	*B2	R226	*D4	R414	F5	R531	*E2
R85	B2	R227	*D4	R415	F5	R601	H5
R86	C2	R228	*D4	R416	*E5	R602	H5
R87	B2	R229	*D4	R417	*E5	R603	*H5
R88	B2	R230	*D4	R418	*E5	R604	G5
R89	B2	R231	*D4	R419	*E5	R605	*G5
R90	B2	R233	*D4	R420	*E5	R606	G5
R91	B2	R234	*D4	R421	*E5	R607	*G5
R92	B3	R236	*D4	R423	*F4	R608	*H5
R93	B2	R237	*C5	R424	*F4	R609	*G5
R94	B2	R238	C5	R425	*F5	R611	*G4
R95	C2	R239	C5	R426	*F4	R612	G5
R96	*C3	R240	*C5	R427	*F4	R613	H5
R97	*B3	R241	C4	R428	*F4	R614	G5
R98	*B3	R242	C4	R429	*F4	R615	H5
R99	*B3	R243	C5	R430	*F4	R616	*G5
R100	*B3	R244	C5	R431	*F4	R617	*G5
R102	*B3	R245	C4	R433	*F4	R618	*G5
R103	B4	R246	C4	R434	*F4	R619	*G5
R104	B3	R247	C4	R436	*F4	R620	*G5
R105	*B3	R248	*C3	R437	*E5	R621	*G5
R107	*B4	R249	C4	R438	E5	R623	*H4
R108	B4	R250	*C3	R439	E5	R624	*H4
R109	*B4	R251	C3	R440	*E5	R625	*H5
R110	B4	R253	*C3	R441	E5	R626	*H4
R111	*C4	R254	*C3	R442	E5	R627	*H4
R112	*C3	R256	*C3	R443	E5	R628	*H4
R113	*B1	R257	*D4	R444	E5	R629	*H4
R114	B1	R258	*D4	R445	E4	R630	*H4
R116	*B1	R259	D4	R446	E4	R631	*H4
R117	*C1	R260	D4	R447	E4	R633	*H4
R118	*A1	R261	D4	R448	*E4	R634	*G4
R119	A1	R262	D3	R449	E4	R635	*G4
R120	*A4	R263	*D3	R450	*E4	R637	*G5
R121	*A1	R264	D3	R451	E3	R638	G5
R122	A1	R265	D3	R453	*E4	R639	G5
R123	*B1	R266	*C3	R454	*E4	R640	*G5
R124	*B1	R267	D3	R456	*E4	R641	G5
R125	*C1	R268	*C2	R457	*F4	R642	G5
R126	*B1	R269	*C3	R458	*F4	R643	G5
R127	*B1	R270	*C3	R459	F4	R644	G5
R128	*A1	R271	*D3	R460	F4	R645	G4
R129	*B1	R272	*D3	R461	F4	R646	G4
R130	C1	R273	*D2	R462	F4	R647	G4
R648	*G4						
R649	G4						
R650	*G4						
R651	G3						
R653	*G4						
R654	*F4						
R655	*F3						
R656	*H3						
R657	*H4						
R658	*H4						
R659	H4						
R660	H4						
R661	H4						
R662	H3						
R663	*F3						
R664	*H3						
R665	*F3						
R667	H3						
R668	*G3						
R669	*G3						
R670	*G3						
R671	*G3						
R672	*G3						
R673	*G3						
R674	G3						
R675	*G3						
R676	H3						
R677	G3						
R678	H4						
R679	G3						
R680	G3						
R681	*H3						
R682	*H3						
R683	*F3						
R684	*H3						
R685	*H3						
R686	*H3						
R687	*H3						
R688	*G3						
R689	*H3						
R690	G2						
R691	G2						
R692	G2						
R693	G2						
R695	*H2						
R696	*G3						
R697	H2						
R698	G2						
R699	*H2						
R700	G2						
R701	G2						
R702	H2						
R703	*G2						
R704	*G2						
R705	*H2						
R706	H2						
R707	G2						
R708	*G2						
R709	H1						
R710	H1						
R711	H1						
R726	G2						
R727	H2						
R728	*G2						
TH401	*E3						

*:B SIDE

DL-65 (1-660-239-14)

CN1	E1	C345	H3	C723	*A3	L107	C3
		C346	G2	C724	*A3	L108	D3
C1	*C1	C347	H2	C725	*A3	L110	D2
C2	*C1	C348	G4	C726	A3	L301	*G4
C3	*C1	C349	H4	C727	*A3	L302	*H4
C4	*C1	C350	G2	C728	*A3	L309	G4
C5	*D1	C351	H2	C729	*A3	L310	H3
C6	*E1	C356	H3	C730	*A3	L311	G2
C7	*B1	C357	H2	C731	B3	L312	H2
C8	*B1	C358	H3	C732	*B4	L315	H3
C9	*B1	C359	H1	C733	*B3	L316	H1
C10	*A1	C360	H3	C734	*A3	L501	*E4
C11	*B1	C361	H1	C735	*B3	L502	*F4
C14	B1	C362	H3	C736	*B4	L507	E3
C15	B2	C363	H1	C737	*A3	L508	F3
C16	*B1	C364	*G3	C738	A3	L510	F2
C17	*B2	C365	*G1	C739	A2		
C18	C1	C366	H3	C741	B2	Q1	C1
C19	*C1	C367	H1	C742	*B3	Q2	B1
C20	*F1	C368	*G3	C744	A2	Q3	A1
C21	*E1	C369	*G3			Q4	B1
C22	*F1	C370	*G3	D701	B3	Q5	*F1
C23	*F1	C371	*G1	D702	*B3	Q6	*E1
C24	*F1	C372	F3	D703	*B3	Q7	*F1
C103	B5	C373	F1			Q8	*E1
C104	C5	C374	F3	DL1	D2	Q106	*B5
C105	C5	C375	G1			Q107	*C5
C106	C5	C376	*G3	E1	H5	Q108	C4
C107	C5	C377	*G1			Q109	*C4
C108	D4	C378	*G4	FL101	C5	Q306	*F5
C109	C5	C503	D5	FL102	C2	Q307	*F5
C113	*D5	C504	E5	FL301	G5	Q308	F5
C114	*D4	C505	E5	FL302	G3	Q309	*G5
C115	D5	C506	E5	FL303	G1	Q506	*D5
C116	D5	C507	E5	FL501	E5	Q507	*D5
C117	*D4	C508	*E5	FL502	E2	Q508	E4
C118	*C4	C509	F4			Q509	*E5
C119	*D4	C510	D5	IC1	C1	Q701	*B3
C120	*C4	C511	*E5	IC2	*D1	Q702	*B3
C121	*C4	C513	*F5	IC3	*E1	Q703	B3
C122	*D4	C514	*F4	IC4	B1	Q704	*B3
C123	*D4	C515	F5	IC5	*B1	Q705	B2
C124	*C4	C516	*E4	IC6	*E1	Q706	B2
C125	*D4	C517	F5	IC7	*F1	Q707	*B2
C126	*C4	C518	*E4	IC101	*C5	Q708	*B2
C127	*D4	C519	*E4	IC102	*C5	Q709	*C1
C128	*C4	C520	*E4	IC103	*D5	Q710	B3
C129	*D4	C521	*E4	IC104	C4		
C130	*C4	C522	*E4	IC105	D4	R1	*C1
C131	*D4	C523	*E4	IC106	*C3	R2	*C1
C140	C3	C524	*E4	IC107	*D3	R3	*C1
C141	D3	C525	*F4	IC108	*D2	R4	*C1
C142	C3	C526	*E4	IC109	*B2	R5	*C1
C143	D3	C527	*F4	IC301	*G5	R6	*C1
C146	D3	C528	*E4	IC302	*G5	R7	*C1
C147	D2	C529	*F4	IC303	*H5	R8	*D2
C148	D2	C530	*E4	IC304	G4	R9	*D1
C149	D2	C531	*F4	IC305	H4	R10	*D1
C150	*C2	C540	E3	IC306	*G4	R11	*D1
C151	D2	C541	F3	IC307	*H4	R12	*D1
C152	*C2	C542	E3	IC308	*H3	R13	*D1
C153	*C2	C543	F3	IC309	*F3	R14	*D1
C154	*C2	C546	F3	IC310	*G2	R15	*D1
C155	C2	C547	F2	IC311	*H2	R16	B1
C156	C2	C548	F2	IC312	*H1	R17	*B1
C157	*C2	C549	F2	IC313	*G1	R18	*B1
C160	*D5	C550	*E2	IC501	*E5	R19	*B1
C161	*C5	C551	F2	IC502	*E5	R20	*C1
C303	F5	C552	*E2	IC503	*F5	R21	*B1
C304	G5	C553	*E2	IC504	E4	R22	B1
C305	G5	C554	*E2	IC505	F4	R23	B1
C306	G5	C555	D2	IC506	*E3	R24	B1
C307	G5	C556	D2	IC507	*F3	R25	A1
C308	*G5	C557	*E2	IC508	*F2	R26	B1
C309	*H5	C558	*E4	IC509	*D2	R27	B1
C310	F5	C701	*E1	IC700	*B2	R28	A1
C311	G5	C702	D1	IC701	A5	R29	A1
C313	*G5	C703	A5	IC702	A5	R30	*D2
C314	H5	C704	*A4	IC703	A4	R31	*C2
C315	H5	C705	*A5	IC704	A4	R32	*E1
C316	*G5	C706	*A5	IC705	B4	R33	*E1
C317	H5	C707	A5	IC706	A3	R34	*F1
C318	*F4	C708	B5	IC707	B3	R35	*F1
C319	*G4	C709	B5	IC708	A4	R36	*E1
C320	*F4	C710	*B4	IC709	A4	R37	*F1
C321	*F4	C711	*A5	IC710	B4	R38	*F1
C322	*G4	C712	*B5	IC711	A2	R39	*F1
C323	*G4	C713	*B4	IC712	*A1	R40	*F1
C324	*G4	C714	*A4	IC713	*A2	R41	*D1
C325	*H4	C715	*A4	IC714	A1	R42	*D1
C326	*G4	C716	*A4	IC715	*B1	R43	F2
C327	*H4	C717	B4			R44	G1
C328	*G4	C718	*B4	L1	*B1	R45	*G3
C329	*H4	C719	*B4	L11	*C1	R46	*H3
C330	*G4	C720	*A3	L12	C2	R50	*D1
C331	*H4	C721	*B4	L101	*C4	R51	*D1
C344	G3	C722	*B4	L102	*D4	R52	*D1

R53	*D1	R319	G5	R518	D5	R747	*B4
R54	*C1	R320	*G5	R519	E5	R748	*B4
R55	*D1	R321	G5	R520	*E4	R749	*B4
R56	*D1	R322	G5	R521	E5	R750	*B4
R57	*E1	R323	G5	R522	E5	R751	A3
R58	*E1	R324	*G5	R523	E5	R752	B3
R59	*E1	R325	*G5	R524	*E5	R753	*A4
R60	H2	R326	*G5	R525	*E5	R754	*A4
R61	G2	R327	G5	R526	*F5	R755	*A4
R62	H2	R328	*H5	R527	F5	R757	*B4
R63	G2	R329	*G5	R528	*F5	R760	*A3
R64	H2	R330	*H5	R529	*E5	R761	*B3
R65	G2	R331	H5	R530	*F5	R762	*B3
R66	H2	R332	H5	R531	F5	R763	*A4
R67	G2	R333	G5	R532	F5	R764	*A4
R68	G3	R334	G5	R533	E4	R765	*A4
R69	G3	R335	*G4	R534	F4	R767	*A3
R70	*E1	R336	*H4	R535	*E4	R768	*A4
R101	C5	R337	F4	R536	*F4	R771	*A3
R102	B4	R338	G4	R537	D3	R772	*A3
R103	B4	R339	F4	R538	E3	R773	*A3
R104	*C4	R340	G4	R539	D3	R774	*A3
R105	C5	R341	F3	R540	E3	R775	*B3
R106	C5	R342	G3	R541	D3	R776	*B4
R112	C5	R343	F3	R542	E3	R777	*B4
R114	*C4	R344	G3	R543	D3	R778	*B3
R115	B4	R345	F3	R544	E3	R779	*B3
R116	C5	R346	G3	R545	D3	R780	A3
R117	B5	R347	*G4	R546	E3	R781	*B3
R118	B5	R348	G4	R547	*E4	R782	*B3
R119	C5	R349	*H4	R548	E3	R783	*B3
R120	*C4	R350	H3	R549	*F4	R784	B3
R121	C5	R351	G3	R550	F3	R785	A2
R122	C5	R352	H4	R551	E3	R786	B2
R123	C5	R353	F3	R552	F3	R787	*B3
R124	*C5	R354	*G3	R553	E3	R788	B2
R125	*C5	R355	*G3	R554	*E3	R789	B2
R126	*D5	R356	*G3	R555	*E3	R790	B2
R127	D5	R359	G2	R556	*E3	R791	*B2
R128	*D5	R360	G2	R559	E2	R792	*B2
R129	*D5	R361	*G3	R560	F2	R793	A1
R131	D5	R362	H3	R561	E2	R794	A1
R132	D5	R363	G2	R562	*E2	R795	A1
R133	C4	R364	H3	R563	E2	R796	*A1
R134	D4	R365	G3	R564	F2	R797	*A1
R135	*C4	R366	G3	R565	F2	R798	A1
R136	*D4	R367	G2	R566	E2	R799	A1
R137	B3	R368	F2	R567	E2	R800	*A1
R138	D3	R369	F3	R568	*D2	R801	*A1
R139	C3	R370	F3	R569	D2	R802	*A1
R140	D3	R371	*G3	R570	E2	R803	*A1
R141	C3	R372	F3	R571	*E2	R804	B3
R142	D3	R373	F3	R572	D2	R808	B2
R143	C3	R374	G2	R573	D2	R809	B3
R144	D3	R375	F2	R574	F2	R810	B2
R145	C3	R376	G2	R590	F2	R820	*C1
R146	C3	R377	F2	R700	B2		
R147	*C4	R378	G2	R701	E2	*:B SIDE	
R148	C3	R379	H2	R702	E2		
R149	*D4	R380	G2	R703	D2		
R150	D3	R381	F2	R704	D1		
R151	C3	R382	G2	R705	*A5		
R152	D3	R383	H2	R706	*A5		
R153	C3	R384	*F2	R707	*A5		
R154	*C3	R385	*G2	R708	*A5		
R155	*C3	R386	*F2	R709	*A5		
R156	*C3	R387	*G2	R710	*A5		
R159	C2	R390	G1	R711	*A5		
R160	D2	R391	G1	R712	*A5		
R161	*C2	R392	H1	R713	*A5		
R162	D2	R393	H1	R714	*A5		
R163	C2	R394	G1	R715	*B5		
R164	D2	R395	*G2	R716	*A5		
R165	D2	R396	H1	R717	*B5		
R166	D2	R397	H1	R718	*A5		
R167	C2	R398	G1	R719	*B5		
R168	*C2	R399	G1	R720	*B5		
R169	B2	R400	G1	R721	*A5		
R170	C2	R401	G1	R722	*B5		
R171	*C2	R402	G1	R723	*B5		
R172	C2	R403	*G1	R724	*A5		
R173	C2	R404	F2	R725	A5		
R174	D2	R405	H1	R726	*A4		
R175	*C4	R406	*G3	R727	*A4		
R190	D2	R407	A1	R729	*B4		
R301	F5	R490	H3	R732	*A4		
R302	F5	R501	E5	R733	*B4		
R303	F4	R502	D4	R734	*B4		
R304	*F5	R503	D4	R735	A5		
R305	F5	R504	*E4	R736	*A4		
R306	F5	R505	E5	R737	*A4		
R312	F5	R506	D5	R739	*A4		
R314	*G5	R512	D5	R740	*A4		
R315	F5	R514	*E4	R743	*A4		
R316	F5	R515	D4	R744	*A4		
R317	F5	R516	E5	R745	*A4		
R318	F5	R517	D5	R746	*A4		

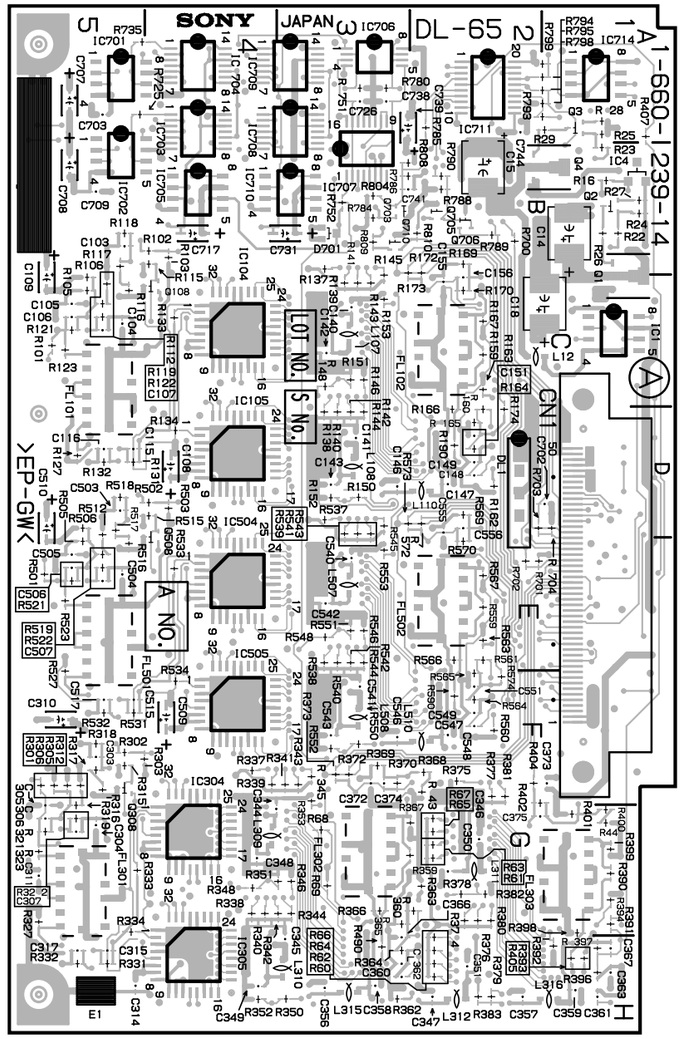

HDC-700 : S/N 10078 and Higher
HDC-750 : S/N 10111 and Higher

DL-65 -A SIDE-
1-660-239-14

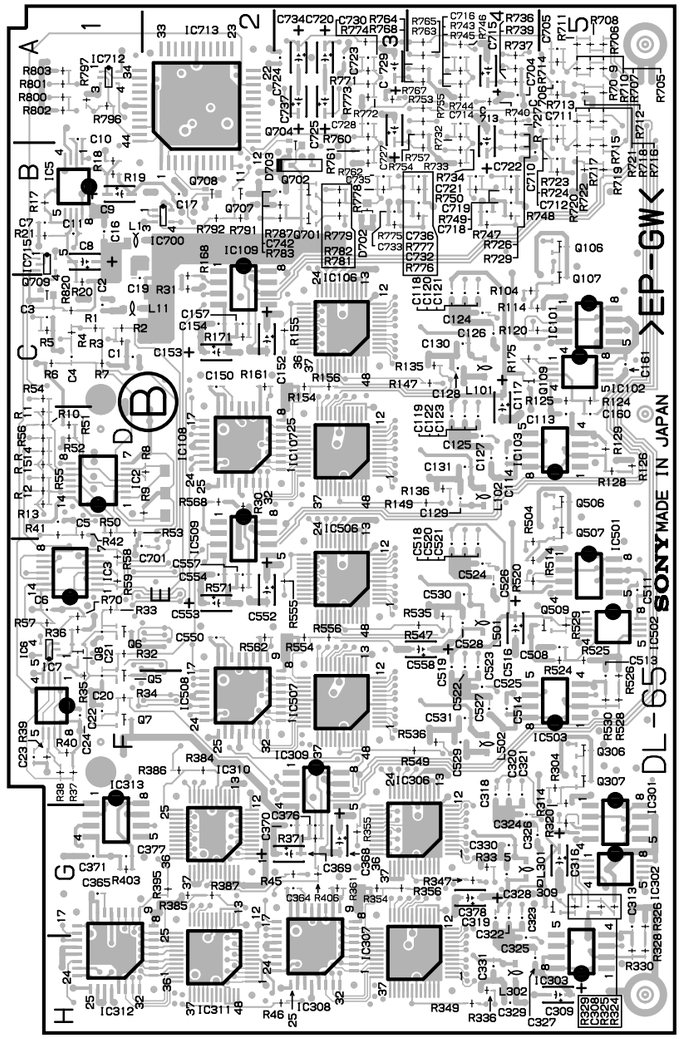

DL-65 -B SIDE-
1-660-239-14

DL-65 (1-660-239-13)

CN1	E1	C345	H3	C723	*A3	L108	D3
		C346	G2	C724	*A3	L110	D2
C1	*C1	C347	H2	C725	*A3	L301	*G4
C2	*C1	C348	G4	C726	A3	L302	*H4
C3	*C1	C349	H4	C727	*A3	L309	G4
C4	*C1	C350	G2	C728	*A3	L310	H3
C5	*D1	C351	H2	C729	*A3	L311	G2
C6	*E1	C356	H3	C730	*A3	L312	H2
C7	*B1	C357	H2	C731	B3	L315	H3
C8	*B1	C358	H3	C732	*B4	L316	H1
C9	*B1	C359	H1	C733	*B3	L501	*E4
C10	*A1	C360	H3	C734	*A3	L502	*F4
C11	*B1	C361	H1	C735	*B3	L507	E3
C14	B1	C362	H3	C736	*B4	L508	F3
C15	B2	C363	H1	C737	*A3	L510	F2
C16	*B1	C364	*G3	C738	A3		
C17	*B2	C365	*G1	C739	A2	Q1	C1
C18	C1	C366	H3	C741	B2	Q2	B1
C19	*C1	C367	H1	C742	*B3	Q3	A1
C20	*F1	C368	*G3	C744	A2	Q4	B1
C21	*E1	C369	*G3			Q5	*F1
C22	*F1	C370	*G3	D701	B3	Q6	*E1
C23	*F1	C371	*G1	D702	*B3	Q7	*F1
C24	*F1	C372	F3	D703	*B3	Q8	*E1
C103	B5	C373	F1			Q106	*B5
C104	C5	C374	F3	DL1	D2	Q107	*C5
C105	C5	C375	G1			Q108	C4
C106	C5	C376	*G3	E1	H5	Q109	*C4
C107	C5	C377	*G1			Q306	*F5
C108	D4	C378	*G4	FL101	C5	Q307	*F5
C109	C5	C503	D5	FL102	C2	Q308	F5
C113	*D5	C504	E5	FL301	G5	Q309	*G5
C114	*D4	C505	E5	FL302	G3	Q506	*D5
C115	D5	C506	E5	FL303	G1	Q507	*D5
C116	D5	C507	E5	FL501	E5	Q508	E4
C117	*D4	C508	*E5	FL502	E2	Q509	*E5
C118	*C4	C509	F4			Q701	*B3
C119	*D4	C510	D5	IC1	C1	Q702	*B3
C120	*C4	C511	*E5	IC2	*D1	Q703	B3
C121	*C4	C513	*F5	IC3	*E1	Q704	*B3
C122	*D4	C514	*F4	IC4	B1	Q705	B2
C123	*D4	C515	F5	IC5	*B1	Q706	B2
C124	*C4	C516	*E4	IC6	*E1	Q707	*B2
C125	*D4	C517	F5	IC7	*F1	Q708	*B2
C126	*C4	C518	*E4	IC101	*C5	Q709	*C1
C127	*D4	C519	*E4	IC102	*C5	Q710	B3
C128	*C4	C520	*E4	IC103	*D5		
C129	*D4	C521	*E4	IC104	C4	R1	*C1
C130	*C4	C522	*E4	IC105	D4	R2	*C1
C131	*D4	C523	*E4	IC106	*C3	R3	*C1
C140	C3	C524	*E4	IC107	*D3	R4	*C1
C141	D3	C525	*F4	IC108	*D2	R5	*C1
C142	C3	C526	*E4	IC109	*B2	R6	*C1
C143	D3	C527	*F4	IC301	*G5	R7	*C1
C146	D3	C528	*E4	IC302	*G5	R8	*D2
C147	D2	C529	*F4	IC303	*H5	R9	*D1
C148	D2	C530	*E4	IC304	G4	R10	*D1
C149	D2	C531	*F4	IC305	H4	R11	*D1
C150	*C2	C540	E3	IC306	*G4	R12	*D1
C151	D2	C541	F3	IC307	*H4	R13	*D1
C152	*C2	C542	E3	IC308	*H3	R14	*D1
C153	*C2	C543	F3	IC309	*F3	R15	*D1
C154	*C2	C546	F3	IC310	*G2	R16	B1
C155	C2	C547	F2	IC311	*H2	R17	*B1
C156	C2	C548	F2	IC312	*H1	R18	*B1
C157	*C2	C549	F2	IC313	*G1	R19	*B1
C160	*D5	C550	*E2	IC501	*E5	R20	*C1
C161	*C5	C551	F2	IC502	*E5	R21	*B1
C303	F5	C552	*E2	IC503	*F5	R22	B1
C304	G5	C553	*E2	IC504	E4	R23	B1
C305	G5	C554	*E2	IC505	F4	R24	B1
C306	G5	C555	D2	IC506	*E3	R25	A1
C307	G5	C556	D2	IC507	*F3	R26	B1
C308	*G5	C557	*F2	IC508	*F2	R27	B1
C309	*H5	C558	*E4	IC509	*D2	R28	A1
C310	F5	C701	*E1	IC701	A5	R29	A1
C311	G5	C702	D1	IC702	A5	R30	*D2
C313	*G5	C703	A5	IC703	A4	R31	*C2
C314	H5	C704	*A4	IC704	A4	R32	*E1
C315	H5	C705	*A5	IC705	B4	R33	*E1
C316	*G5	C706	*A5	IC706	A3	R34	*F1
C317	H5	C707	A5	IC707	B3	R35	*F1
C318	*F4	C708	B5	IC708	A4	R36	*E1
C319	*G4	C709	B5	IC709	A4	R37	*F1
C320	*F4	C710	*B4	IC710	B4	R38	*F1
C321	*F4	C711	*A5	IC711	A2	R39	*F1
C322	*G4	C712	*B5	IC712	*A1	R40	*F1
C323	*G4	C713	*B4	IC713	*A2	R41	*D1
C324	*G4	C714	*A4	IC714	A1	R42	*D1
C325	*H4	C715	*A4	IC715	*B1	R43	F2
C326	*G4	C716	*A4			R44	G1
C327	*H4	C717	B4	L1	*B1	R45	*G3
C328	*G4	C718	*B4	L11	*C1	R46	*H3
C329	*H4	C719	*B4	L12	C2	R50	*D1
C330	*G4	C720	*A3	L101	*C4	R51	*D1
C331	*H4	C721	*B4	L102	*D4	R52	*D1
C344	G3	C722	*B4	L107	C3	R53	*D1

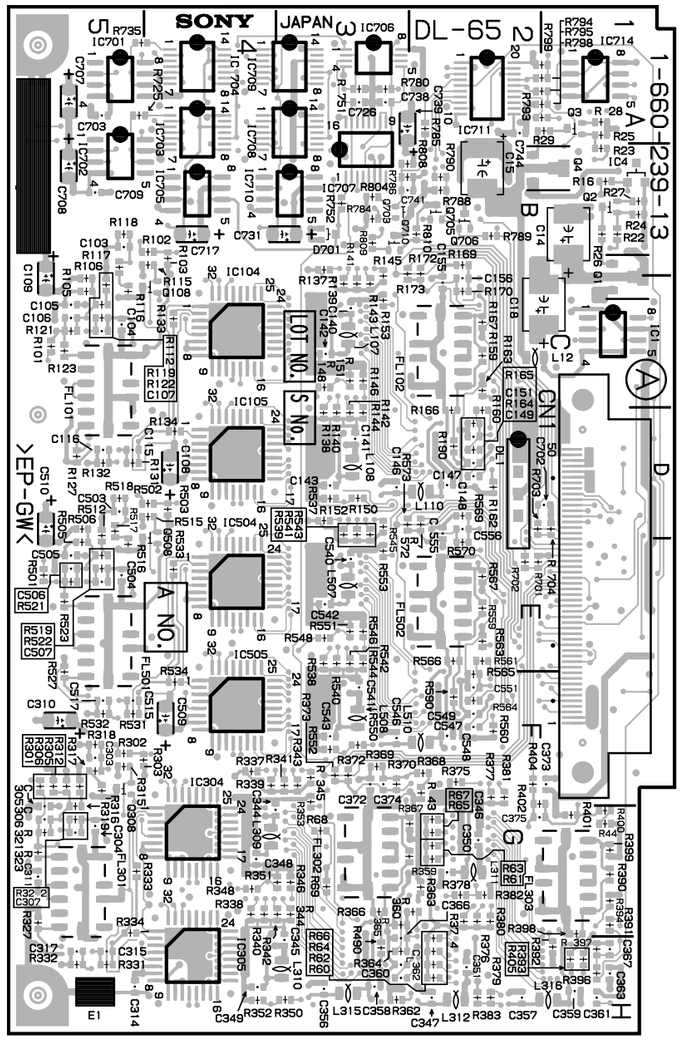

HDC-700 : S/N 10043 through 10077
HDC-750 : S/N 10086 through 10110

DL-65 -A SIDE-
1-660-239-13

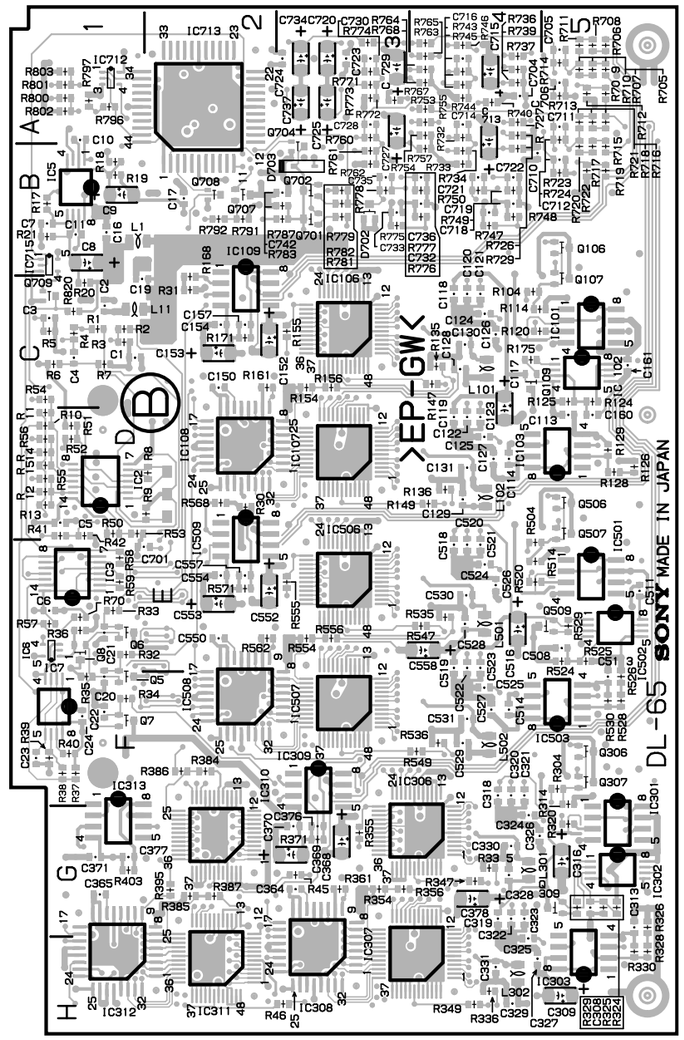

DL-65 -B SIDE-
1-660-239-13

R54	*C1	R321	G5	R522	E5	R753	*A4
R55	*D1	R322	G5	R523	E5	R754	*A4
R56	*D1	R323	G5	R524	*E5	R755	*A4
R57	*E1	R324	*G5	R525	*E5	R757	*B4
R58	*E1	R325	*G5	R526	*F5	R760	*A3
R59	*E1	R326	*G5	R527	F5	R761	*B3
R60	H2	R327	G5	R528	*F5	R762	*B3
R61	G2	R328	*H5	R529	*E5	R763	*A4
R62	H2	R329	*G5	R530	*F5	R764	*A4
R63	G2	R330	*H5	R531	F5	R765	*A4
R64	H2	R331	H5	R532	F5	R767	*A3
R65	G2	R332	H5	R533	E4	R768	*A4
R66	H2	R333	G5	R534	F4	R771	*A3
R67	G2	R334	G5	R535	*E4	R772	*A3
R68	G3	R335	*G4	R536	*F4	R773	*A3
R69	G3	R336	*H4	R537	D3	R774	*A3
R70	*E1	R337	F4	R538	E3	R775	*B3
R101	C5	R338	G4	R539	D3	R776	*B4
R102	B4	R339	F4	R540	E3	R777	*B4
R103	B4	R340	G4	R541	D3	R778	*B3
R104	*C4	R341	F3	R542	E3	R779	*B3
R105	C5	R342	G3	R543	D3	R780	A3
R106	C5	R343	F3	R544	E3	R781	*B3
R112	C5	R344	G3	R545	D3	R782	*B3
R114	*C4	R345	F3	R546	E3	R783	*B3
R115	B4	R346	G3	R547	*E4	R784	B3
R116	C5	R347	*G4	R548	E3	R785	A2
R117	B5	R348	G4	R549	*F4	R786	B2
R118	B5	R349	*H4	R550	F3	R787	*B3
R119	C5	R350	H3	R551	E3	R788	B2
R120	*C4	R351	G3	R552	F3	R789	B2
R121	C5	R352	H4	R553	E3	R790	B2
R122	C5	R353	F3	R554	*E3	R791	*B2
R123	C5	R354	*G3	R555	*E3	R792	*B2
R124	*C5	R355	*G3	R556	*E3	R793	A1
R125	*C5	R356	*G3	R559	E2	R794	A1
R126	*D5	R359	G2	R560	F2	R795	A1
R127	D5	R360	G2	R561	E2	R796	*A1
R128	*D5	R361	*G3	R562	*E2	R797	*A1
R129	*D5	R362	H3	R563	E2	R798	A1
R131	D5	R363	G2	R564	F2	R799	A1
R132	D5	R364	H3	R565	F2	R800	*A1
R133	C4	R365	G3	R566	E2	R801	*A1
R134	D4	R366	G3	R567	E2	R802	*A1
R135	*C4	R367	G2	R568	*D2	R803	*A1
R136	*D4	R368	F2	R569	D2	R804	B3
R137	B3	R369	F3	R570	E2	R808	B2
R138	D3	R370	F3	R571	*E2	R809	B3
R139	C3	R371	*G3	R572	D2	R810	B2
R140	D3	R372	F3	R573	D2	R820	*C1
R141	C3	R373	F3	R590	F2		
R142	D3	R374	G2	R701	E2	*:B SIDE	
R143	C3	R375	F2	R702	E2		
R144	D3	R376	G2	R703	D2		
R145	C3	R377	F2	R704	D1		
R146	C3	R378	G2	R705	*A5		
R147	*C4	R379	H2	R706	*A5		
R148	C3	R380	G2	R707	*A5		
R149	*D4	R381	F2	R708	*A5		
R150	D3	R382	G2	R709	*A5		
R151	C3	R383	H2	R710	*A5		
R152	D3	R384	*F2	R711	*A5		
R153	C3	R385	*G2	R712	*A5		
R154	*C3	R386	*F2	R713	*A5		
R155	*C3	R387	*G2	R714	*A5		
R156	*C3	R390	G1	R715	*B5		
R159	C2	R391	G1	R716	*A5		
R160	D2	R392	H1	R717	*B5		
R161	*C2	R393	H1	R718	*A5		
R162	D2	R394	G1	R719	*B5		
R163	C2	R395	*G2	R720	*B5		
R164	D2	R396	H1	R721	*A5		
R165	D2	R397	H1	R722	*B5		
R166	D2	R398	G1	R723	*B5		
R167	C2	R399	G1	R724	*A5		
R168	*C2	R400	G1	R725	A5		
R169	B2	R401	G1	R726	*A4		
R170	C2	R402	G1	R727	*A4		
R171	*C2	R403	*G1	R729	*B4		
R172	C2	R404	F2	R732	*A4		
R173	C2	R405	H1	R733	*B4		
R175	*C4	R490	H3	R734	*B4		
R190	D2	R501	E5	R735	A5		
R301	F5	R502	D4	R736	*A4		
R302	F5	R503	D4	R737	*A4		
R303	F4	R504	*E4	R739	*A4		
R304	*F5	R505	E5	R740	*A4		
R305	F5	R506	D5	R743	*A4		
R306	F5	R512	D5	R744	*A4		
R312	F5	R514	*E4	R745	*A4		
R314	*G5	R515	D4	R746	*A4		
R315	F5	R516	E5	R747	*B4		
R316	F5	R517	D5	R748	*B4		
R317	F5	R518	D5	R749	*B4		
R318	F5	R519	E5	R750	*B4		
R319	G5	R520	*E4	R751	A3		
R320	*G5	R521	E5	R752	B3		

DL-65 (1-660-239-12)

CN1	E1	C346	G2	C728	*A3	L502	*F4
		C347	H2	C729	*A3	L507	E3
C1	*C1	C348	G4	C730	*A3	L508	F3
C2	*C1	C349	H4	C731	B3	L510	F2
C3	*C1	C350	G2	C732	*B4		
C4	*C1	C351	H2	C733	*B3	Q1	C1
C5	*D1	C356	H3	C734	*A3	Q2	B1
C6	*E1	C357	H2	C736	*B4	Q3	A1
C7	*B1	C358	H3	C737	*A3	Q4	B1
C8	*B1	C359	H1	C738	A3	Q5	*F1
C9	*B1	C360	H3	C739	A2	Q6	*E1
C10	*A1	C361	H1	C741	B2	Q7	*F1
C11	*B1	C362	H3	C742	*B3	Q8	*E1
C14	B1	C363	H1	C744	A2	Q106	*B5
C15	B2	C364	*G3			Q107	*C5
C16	*B1	C365	*G1	DL1	D2	Q108	C4
C17	*B2	C366	H3			Q109	*C4
C18	C1	C367	H1	D703	*B3	Q306	*F5
C19	*C1	C368	*G3			Q307	*F5
C20	*F1	C369	*G3	E1	H5	Q308	F5
C21	*E1	C370	*G3			Q309	*G5
C22	*F1	C371	*G1	FL101	C5	Q506	*D5
C23	*F1	C372	F3	FL301	G5	Q507	*D5
C24	*F1	C373	F1	FL303	G1	Q508	E4
C103	B5	C376	*G3	FL501	E5	Q509	*E5
C104	C5	C377	*G1			Q701	*B3
C105	C5	C378	*G4	IC1	C1	Q702	*B3
C106	C5	C503	D5	IC2	*D1	Q703	B3
C107	C5	C504	E5	IC3	*E1	Q704	*B3
C108	D4	C505	E5	IC4	B1	Q705	B2
C109	C5	C506	E5	IC5	*B1	Q706	B2
C113	*D5	C507	E5	IC6	*E1	Q707	*B2
C114	*D4	C508	*E5	IC7	*F1	Q708	*B2
C115	D5	C509	F4	IC101	*C5	Q709	*C1
C116	D5	C510	D5	IC102	*C5	Q710	B3
C117	*D4	C511	*E5	IC103	*D5		
C118	*C4	C513	*F5	IC104	C4	R1	*C1
C119	*D4	C514	*F4	IC105	D4	R2	*C1
C120	*C4	C515	F5	IC106	*C3	R3	*C1
C121	*C4	C516	*E4	IC107	*D3	R4	*C1
C122	*D4	C517	F5	IC108	*D2	R5	*C1
C123	*D4	C518	*E4	IC109	*B2	R8	*D2
C124	*C4	C519	*E4	IC301	*G5	R9	*D1
C125	*D4	C520	*E4	IC302	*G5	R11	*D1
C126	*C4	C521	*E4	IC303	*H5	R14	*D1
C127	*D4	C522	*E4	IC304	G4	R16	B1
C128	*C4	C523	*E4	IC305	H4	R17	*B1
C129	*D4	C524	*E4	IC306	*G4	R18	*B1
C130	*C4	C525	*F4	IC307	*H4	R19	*B1
C131	*D4	C526	*E4	IC308	*H3	R20	*C1
C140	C3	C527	*F4	IC309	*F3	R21	*B1
C141	D3	C528	*E4	IC310	*G2	R22	B1
C142	C3	C529	*F4	IC311	*H2	R23	B1
C143	D3	C530	*E4	IC312	*H1	R24	B1
C146	D3	C531	*F4	IC313	*G1	R25	A1
C147	D2	C540	E3	IC501	*E5	R26	B1
C148	D2	C541	F3	IC502	*E5	R27	B1
C149	D2	C542	E3	IC503	*F5	R28	A1
C150	*C2	C543	F3	IC504	E4	R29	A1
C151	D2	C546	F3	IC505	F4	R30	*D2
C152	*C2	C547	F2	IC506	*E3	R31	*C2
C153	*C2	C548	F2	IC507	*F3	R32	*E1
C154	*C2	C549	F2	IC508	*F2	R33	*E1
C155	C2	C550	*E2	IC509	*D2	R34	*F1
C157	*C2	C551	F2	IC701	A5	R35	*F1
C160	*D5	C552	*E2	IC702	A5	R36	*E1
C161	*C5	C553	*E2	IC703	A4	R37	*F1
C303	F5	C554	*E2	IC704	A4	R38	*F1
C304	G5	C555	D2	IC705	B4	R39	*F1
C305	G5	C557	*E2	IC706	A3	R40	*F1
C306	G5	C558	*E4	IC707	B3	R41	*D1
C307	G5	C701	*E1	IC708	A4	R42	*D1
C308	*G5	C702	D1	IC709	A4	R43	F2
C309	*H5	C703	A5	IC710	B4	R44	G1
C310	F5	C704	*A4	IC711	A2	R50	*D1
C311	G5	C705	*A5	IC712	*A1	R51	*D1
C313	*G5	C706	*A5	IC713	*A2	R55	*D1
C314	H5	C707	A5	IC714	A1	R57	*E1
C315	H5	C708	B5	IC715	*B1	R58	*E1
C316	*G5	C709	B5			R60	H2
C317	H5	C710	*B4	L1	*B1	R61	G2
C318	*F4	C711	*A5	L11	*C1	R62	H2
C319	*G4	C712	*B5	L12	C2	R63	G2
C320	*F4	C713	*B4	L101	*C4	R64	H2
C321	*F4	C714	*A4	L102	*D4	R65	G2
C322	*G4	C715	*A4	L107	C3	R66	H2
C323	*G4	C716	*A4	L108	D3	R67	G2
C324	*G4	C717	B4	L110	D2	R68	G3
C325	*H4	C718	*B4	L301	*G4	R69	G3
C326	*G4	C719	*B4	L302	*H4	R101	C5
C327	*H4	C720	*A3	L309	G4	R102	B4
C328	*G4	C722	*B4	L310	H3	R103	B4
C329	*H4	C723	*A3	L311	G2	R104	*C4
C330	*G4	C724	*A3	L312	H2	R105	C5
C331	*H4	C725	*A3	L315	H3	R112	C5
C344	G3	C726	A3	L316	H1	R114	*C4
C345	H3	C727	*A3	L501	*E4	R115	B4

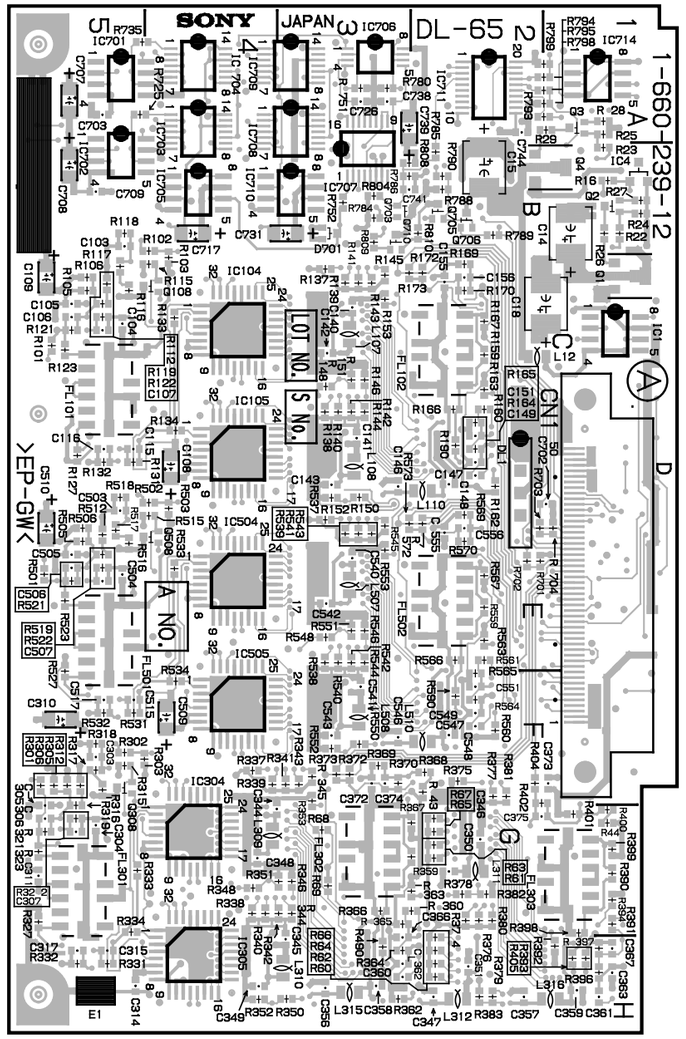

HDC-700 : S/N 10013 through 10042
HDC-750 : S/N 10041 through 10085

DL-65 -A SIDE-
1-660-239-12

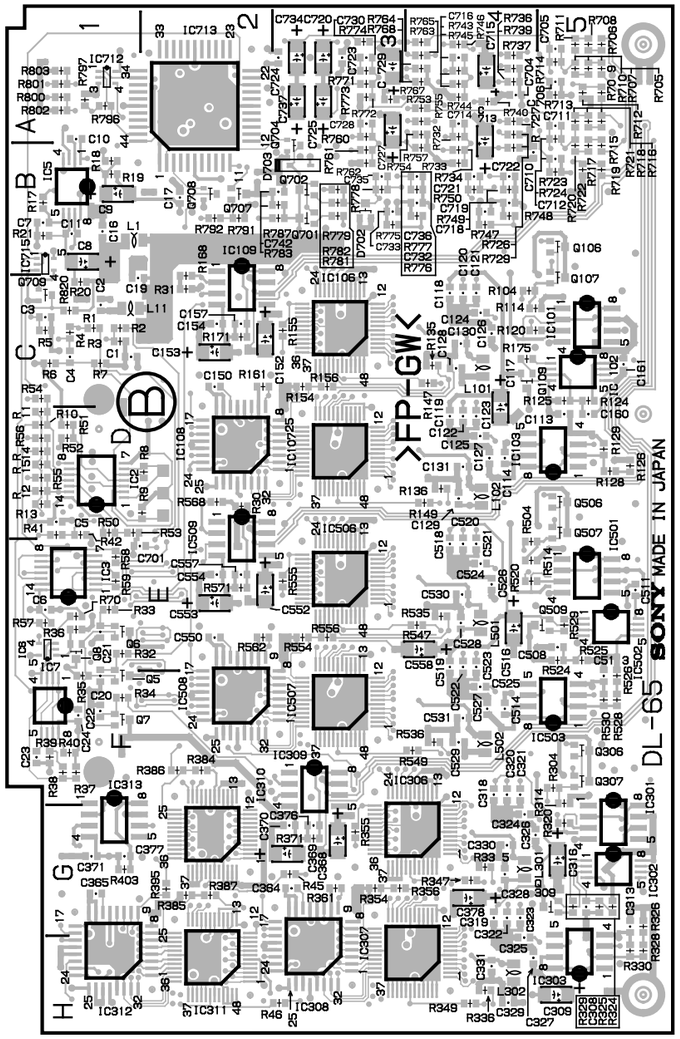

DL-65 -B SIDE-
1-660-239-12

R116	C5	R366	G3	R705	*A5		
R117	B5	R367	G2	R706	*A5		
R118	B5	R368	F2	R707	*A5		
R119	C5	R369	F3	R708	*A5		
R120	*C4	R370	F3	R709	*A5		
R121	C5	R371	*G3	R710	*A5		
R122	C5	R372	F3	R711	*A5		
R123	C5	R373	F3	R712	*A5		
R124	*C5	R375	F2	R713	*A5		
R125	*C5	R377	F2	R714	*A5		
R126	*D5	R378	G2	R715	*B5		
R127	D5	R379	H2	R716	*A5		
R128	*D5	R380	G2	R717	*B5		
R129	*D5	R382	G2	R718	*A5		
R131	D5	R383	H2	R719	*B5		
R132	D5	R384	*F2	R720	*B5		
R133	C4	R385	*G2	R721	*A5		
R134	D4	R386	*F2	R722	*B5		
R135	*C4	R387	*G2	R723	*B5		
R136	*D4	R392	H1	R724	*A5		
R137	B3	R393	H1	R725	A5		
R140	D3	R394	G1	R726	*A4		
R142	D3	R395	*G2	R727	*A4		
R143	C3	R396	H1	R729	*B4		
R145	C3	R397	H1	R732	*A4		
R148	C3	R398	G1	R733	*B4		
R150	D3	R399	G1	R734	*B4		
R151	C3	R400	G1	R735	A5		
R152	D3	R401	G1	R736	*A4		
R153	C3	R402	G1	R737	*A4		
R154	*C3	R403	*G1	R739	*A4		
R155	*C3	R404	F2	R740	*A4		
R156	*C3	R405	H1	R743	*A4		
R159	C2	R490	H3	R744	*A4		
R161	*C2	R501	E5	R745	*A4		
R162	D2	R502	D4	R746	*A4		
R163	C2	R503	D4	R747	*B4		
R164	D2	R504	*E4	R748	*B4		
R165	D2	R505	E5	R749	*B4		
R166	D2	R512	D5	R750	*B4		
R167	C2	R514	*E4	R751	A3		
R168	*C2	R515	D4	R752	B3		
R169	B2	R516	E5	R753	*A4		
R170	C2	R517	D5	R754	*A4		
R171	*C2	R518	D5	R755	*A4		
R172	C2	R519	E5	R757	*B4		
R173	C2	R520	*E4	R760	*A3		
R175	*C4	R521	E5	R761	*B3		
R190	D2	R522	E5	R762	*B3		
R301	F5	R523	E5	R763	*A4		
R302	F5	R524	*E5	R764	*A4		
R303	F4	R525	*E5	R765	*A4		
R304	*F5	R526	*F5	R767	*A3		
R305	F5	R527	F5	R768	*A4		
R312	F5	R528	*F5	R771	*A3		
R314	*G5	R529	*E5	R772	*A3		
R315	F5	R530	*F5	R773	*A3		
R316	F5	R531	F5	R774	*A3		
R317	F5	R532	F5	R775	*B3		
R318	F5	R533	E4	R776	*B4		
R319	G5	R534	F4	R777	*B4		
R320	*G5	R535	*E4	R778	*B3		
R321	G5	R536	*F4	R779	*B3		
R322	G5	R537	D3	R780	A3		
R323	G5	R540	E3	R781	*B3		
R324	*G5	R542	E3	R782	*B3		
R325	*G5	R543	D3	R783	*B3		
R326	*G5	R545	D3	R784	B3		
R327	G5	R547	*E4	R785	B2		
R328	*H5	R548	E3	R786	B2		
R329	*G5	R549	*F4	R787	*B3		
R330	*H5	R550	F3	R788	B2		
R331	H5	R551	E3	R789	B2		
R332	H5	R552	F3	R790	B2		
R333	G5	R553	E3	R791	*B2		
R334	G5	R554	*E3	R792	*B2		
R335	*G4	R555	*E3	R793	A1		
R336	*H4	R556	*E3	R794	A1		
R337	F4	R559	E2	R795	A1		
R340	G4	R560	F2	R796	*A1		
R342	G3	R562	*E2	R797	*A1		
R343	F3	R563	E2	R798	A1		
R345	F3	R564	F2	R799	A1		
R348	G4	R565	F2	R800	*A1		
R350	H3	R566	E2	R801	*A1		
R351	G3	R567	E2	R802	*A1		
R352	H4	R568	*D2	R803	*A1		
R353	F3	R569	D2	R804	B3		
R354	*G3	R570	E2	R808	B2		
R355	*G3	R571	*E2	R809	B3		
R356	*G3	R572	D2	R810	B2		
R359	G2	R573	D2	R820	*C1		
R361	*G3	R590	F2				
R362	H3	R701	E2	*:B SIDE			
R363	G2	R702	E2				
R364	H3	R703	D2				
R365	G3	R704	D1				

DL-65 (1-660-239-11)

CN1	E1	C349	H4	C732	*B4		
		C350	G2	C733	*B3		
C1	*C1	C351	H2	C734	*A3		
C2	*C1	C356	H3	C736	*B4		
C3	*C1	C357	H2	C737	*A3		
C4	*C1	C358	H3	C738	A3		
C5	*D1	C359	H1	C739	A2		
C6	*E1	C360	H3	C741	B2		
C7	*B1	C361	H1	C742	*B3		
C8	*B1	C362	H3	C744	A2		
C9	*B1	C363	H1				
C10	*A1	C364	*G3	DL1	D2		
C11	*B1	C365	*G1				
C14	B1	C366	H3	D701	B3		
C15	B2	C367	H1	D702	*B3		
C16	*B1	C368	*G3	D703	*B3		
C17	*B2	C369	*G3				
C18	C1	C370	*G3	E1	H5		
C19	*C1	C371	*G1				
C20	*F1	C372	F3	FL101	C5		
C21	*E1	C373	F1	FL301	G5		
C22	*F1	C376	*G3	FL303	G1		
C23	*E1	C377	*G1	FL501	E5		
C24	*F1	C378	*G4				
C103	B5	C503	D5	IC1	C1		
C104	C5	C504	E5	IC2	*D1		
C105	C5	C505	E5	IC3	*E1		
C106	C5	C506	E5	IC4	B1		
C107	C5	C507	E5	IC5	*B1		
C108	D4	C509	F4	IC6	*E1		
C109	C5	C510	D5	IC7	*F1		
C113	*D5	C513	*F5	IC101	*C5		
C114	*D4	C514	*F4	IC103	*D5		
C115	D5	C515	F5	IC104	C4		
C116	D5	C516	*E4	IC105	D4		
C117	*C4	C517	F5	IC106	*C3		
C118	*C4	C518	*E4	IC107	*D3		
C119	*D4	C519	*E4	IC108	*D2		
C120	*C4	C520	*E4	IC109	*B2		
C121	*C4	C521	*E4	IC301	*G5		
C122	*D4	C522	*E4	IC303	*H5		
C123	*D4	C523	*E4	IC304	G4		
C124	*C4	C524	*E4	IC305	H4		
C125	*D4	C525	*F4	IC306	*G4		
C126	*C4	C526	*E4	IC307	*H4		
C127	*D4	C527	*F4	IC308	*H3		
C128	*C4	C528	*E4	IC309	*F3		
C129	*D4	C529	*F4	IC310	*G2		
C130	*C4	C530	*E4	IC311	*H2		
C131	*D4	C531	*F4	IC312	*H1		
C140	C3	C540	E3	IC313	*G1		
C141	D3	C541	F3	IC501	*E5		
C142	C3	C542	E3	IC503	*F5		
C143	D3	C543	F3	IC504	E4		
C146	D3	C546	F3	IC505	F4		
C147	D2	C547	F2	IC506	*E3		
C148	D2	C548	F2	IC507	*F3		
C149	D2	C549	F2	IC508	*F2		
C150	*C2	C550	*E2	IC509	*D2		
C151	D2	C551	F2	IC701	A5		
C152	*C2	C552	*E2	IC702	A5		
C153	*C2	C553	*E2	IC703	A4		
C154	*C2	C554	*E2	IC704	A4		
C155	C2	C555	D2	IC705	B4		
C157	*C2	C557	*E2	IC706	A3		
C303	F5	C558	*E4	IC707	B3		
C304	G5	C701	*E2	IC708	A4		
C305	G5	C702	D1	IC709	A4		
C306	G5	C703	A5	IC710	B4		
C307	G5	C704	*A4	IC711	A2		
C309	*H5	C705	*A5	IC712	*A1		
C310	F5	C706	*A5	IC713	*A2		
C313	*G5	C707	A5	IC714	A1		
C314	H5	C708	B5	IC715	*D1		
C315	H5	C709	B5				
C316	*G5	C710	*B4	L1	*B1		
C317	H5	C711	*A5	L11	*C1		
C318	*F4	C712	*B5	L12	C2		
C319	*G4	C713	*B4	L101	*C4		
C320	*F4	C714	*A4	L102	*D4		
C321	*F4	C715	*A4	L107	C3		
C322	*G4	C716	*A4	L108	D3		
C323	*G4	C717	B4	L110	D2		
C324	*G4	C718	*B4	L301	*G4		
C325	*H4	C719	*B4	L302	*H4		
C326	*G4	C720	*A3	L309	G4		
C327	*H4	C722	*B4	L310	H3		
C328	*G4	C723	*A3	L311	G2		
C329	*H4	C724	*A3	L312	H2		
C330	*G4	C725	*A3	L315	H3		
C331	*H4	C726	A3	L316	H1		
C344	G3	C727	*A3	L501	*E4		
C345	H3	C728	*A3	L502	*F4		
C346	G2	C729	*A3	L507	E3		
C347	H2	C730	*A3	L508	F3		
C348	G4	C731	B3	L510	F2		

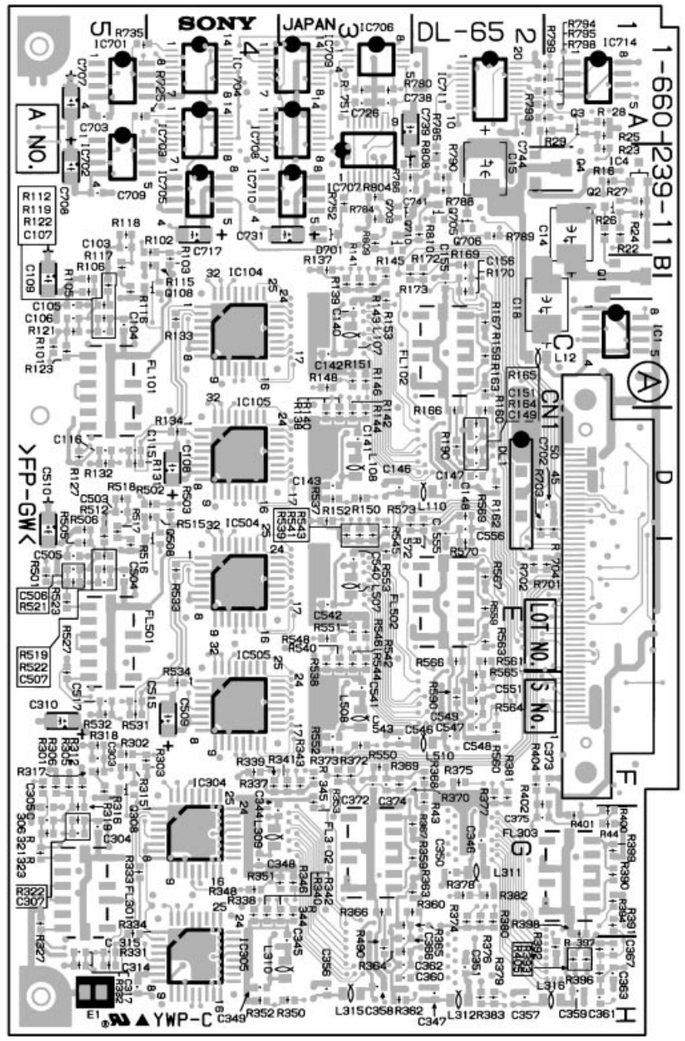

HDC-700 : S/N 10001 through 10012
HDC-750 : S/N 10001 through 10040

DL-65 -A SIDE-
1-660-239-11

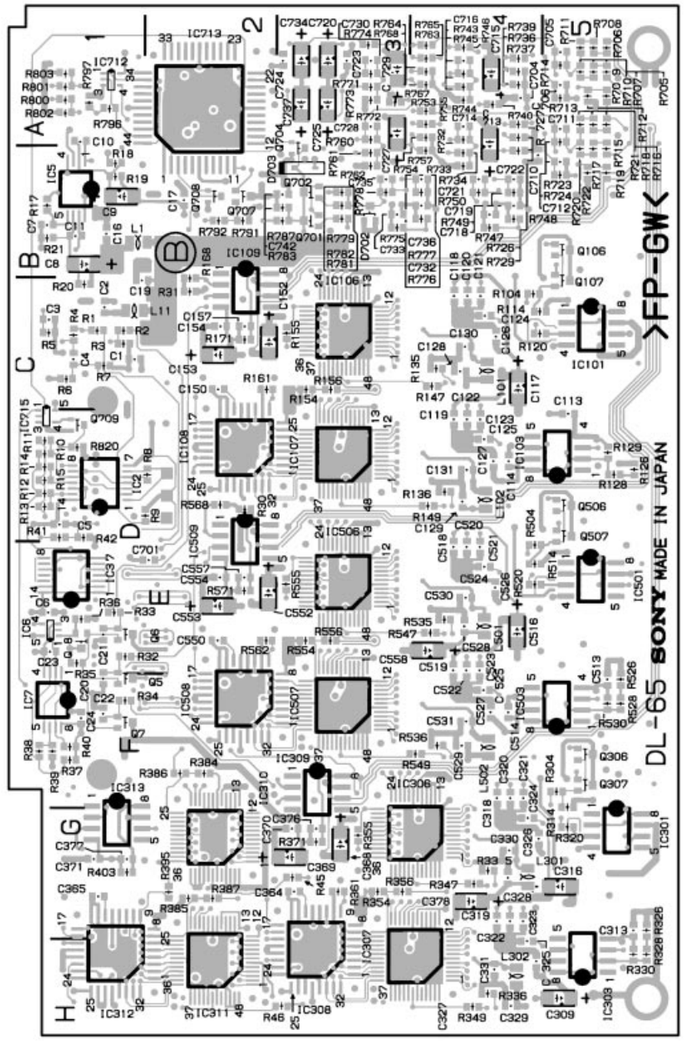

DL-65 -B SIDE-
1-660-239-11

Q1	C1	R140	D3	R405	H1	R749	*B4
Q2	B1	R142	D3	R490	H3	R750	*B4
Q3	A1	R143	C3	R501	E5	R751	A3
Q4	B1	R145	C3	R502	D4	R752	B3
Q5	*F1	R147	*C4	R503	D4	R753	*A4
Q6	*E1	R149	*D4	R504	*E4	R754	*A4
Q7	*F1	R153	C3	R505	E5	R755	*A4
Q8	*E1	R154	*C3	R512	D5	R757	*B4
Q106	*B5	R155	*C3	R514	*E4	R760	*A3
Q107	*C5	R156	*C3	R515	D4	R761	*B3
Q108	C4	R159	C2	R516	E5	R762	*B3
Q306	*F5	R161	*C2	R517	D5	R763	*A4
Q307	*F5	R162	D2	R518	D5	R764	*A4
Q308	F5	R163	C2	R519	E5	R765	*A4
Q506	*D5	R164	D2	R520	*E4	R767	*A3
Q507	*D5	R165	D2	R521	E5	R768	*A4
Q508	E4	R166	D2	R522	E5	R771	*A3
Q701	*B3	R167	C2	R523	E5	R772	*A3
Q702	*B3	R168	*C2	R526	*F5	R773	*A3
Q703	B3	R169	B2	R527	F5	R774	*A3
Q704	*B3	R170	C2	R528	*F5	R775	*B3
Q705	B2	R171	*C2	R530	*F5	R776	*B4
Q706	B2	R172	C2	R531	F5	R777	*B4
Q707	*B2	R173	C2	R532	F5	R778	*B3
Q708	*B2	R190	D2	R533	E4	R779	*B3
Q709	*D1	R301	F5	R534	F4	R780	A3
Q710	B3	R302	F5	R535	*E4	R781	*B3
		R303	F4	R536	*F4	R782	*B3
R1	*C1	R304	*F5	R537	D3	R783	*B3
R2	*C1	R305	F5	R540	E3	R784	B3
R3	*C1	R312	F5	R542	E3	R785	B2
R4	*C1	R314	*G5	R543	D3	R786	B2
R5	*C1	R315	F5	R545	D3	R787	*B3
R8	*D2	R316	F5	R547	*E4	R788	B2
R9	*D1	R317	F5	R549	*F4	R789	B2
R11	*D1	R318	F5	R553	E3	R790	B2
R14	*D1	R319	G5	R554	*E3	R791	*B2
R16	B1	R320	*G5	R555	*E3	R792	*B2
R17	*B1	R321	G5	R556	*E3	R793	A1
R18	*B1	R322	G5	R559	E2	R794	A1
R19	*B1	R323	G5	R560	F2	R795	A1
R20	*C1	R326	*G5	R562	*E2	R796	*A1
R21	*B1	R327	G5	R563	E2	R797	*A1
R22	B1	R328	*H5	R564	F2	R798	A1
R23	B1	R330	*H5	R565	F2	R799	A1
R24	B1	R331	H5	R566	E2	R800	*A1
R25	A1	R332	H5	R567	E2	R801	*A1
R26	B1	R333	G5	R568	*D2	R802	*A1
R27	B1	R334	G5	R569	D2	R803	*A1
R28	A1	R335	*G4	R570	E2	R804	B3
R29	A1	R336	*H4	R571	*E2	R809	B3
R30	*D2	R337	F4	R572	D2	R810	B2
R31	*C2	R340	G4	R573	D2	R820	*D1
R32	*E1	R342	G3	R590	F2		
R33	*E1	R343	F3	R701	E1	*:B SIDE	
R34	*F1	R345	F3	R702	E2		
R35	*E1	R347	*G4	R703	D2		
R36	*E1	R349	*H4	R704	D1		
R37	*F1	R353	F3	R705	*A5		
R38	*F1	R354	*G3	R706	*A5		
R39	*F1	R355	*G3	R707	*A5		
R40	*F1	R356	*G3	R708	*A5		
R41	*D1	R359	G2	R709	*A5		
R42	*D1	R361	*G3	R710	*A5		
R43	F2	R362	H3	R711	*A5		
R44	G1	R363	G2	R712	*A5		
R45	*G3	R364	H3	R713	*A5		
R46	*H3	R365	G3	R714	*A5		
R101	C5	R366	G3	R715	*B5		
R102	B4	R367	G2	R716	*A5		
R103	B4	R368	F2	R717	*B5		
R104	*C4	R369	F3	R718	*A5		
R105	C5	R370	F3	R719	*B5		
R112	C5	R371	*G3	R720	*B5		
R114	*C4	R372	F3	R721	*A5		
R115	B4	R373	F3	R722	*B5		
R116	C5	R375	F2	R723	*B5		
R117	B5	R377	F2	R724	*A5		
R118	B5	R380	G2	R725	A5		
R119	C5	R384	*F2	R726	*A4		
R120	*C4	R385	*G2	R727	*A4		
R121	C5	R386	*F2	R729	*B4		
R122	C5	R387	*G2	R732	*A4		
R123	C5	R392	H1	R733	*B4		
R126	*D5	R393	H1	R734	*B4		
R127	D5	R394	G1	R735	A5		
R128	*D5	R395	*G2	R736	*A4		
R129	*D5	R396	H1	R737	*A4		
R131	D5	R397	H1	R739	*A4		
R132	D5	R398	G1	R740	*A4		
R133	C4	R399	G1	R743	*A4		
R134	D4	R400	G1	R744	*A4		
R135	*C4	R401	G1	R745	*A4		
R136	*D4	R402	G1	R746	*A4		
R137	B3	R403	*G1	R747	*B4		
		R404	F2	R748	*B4		

IE-44 (1-660-240-12)

CN1	D1	C321	*H2	DL401	A5	Q301	H3
		C322	*H2	DL403	B4	Q302	H3
C1	*B1	C323	G2	DL404	B4	Q303	H3
C2	*C1	C324	*H2	DL405	B4	Q304	H3
C3	*C1	C325	*H3	DL406	A3	Q305	H2
C4	*C1	C401	*C5			Q306	H2
C5	*D1	C402	*C5	D401	*E5	Q307	*H2
C6	*E1	C403	*C5	D402	*E5	Q308	H2
C7	*F1	C404	C5	D403	*E4	Q309	G2
C8	*G1	C405	*B5			Q310	G2
C9	*H1	C406	*C5	E1	G5	Q401	*C5
C10	*H1	C407	*A5			Q402	*C5
C11	*G1	C408	*B5	FL101	E5	Q403	*C5
C12	G1	C409	*B5	FL201	F5	Q404	*C3
C13	G1	C410	*B5	FL301	G5	Q405	*C3
C14	*F1	C411	*A5	FL401	C3	Q406	C3
C15	*G1	C412	A5			Q407	C3
C16	*B1	C413	A5	IC1	*B1	Q408	C3
C17	*B1	C414	A5	IC2	*C1	Q409	C3
C18	*B1	C421	*B3	IC3	*F1	Q410	*C3
C20	E5	C422	*A4	IC4	*G1	Q411	*C3
C21	*F4	C423	*B4	IC5	*A1	Q412	*C3
C22	F5	C424	*B3	IC6	*E1	Q413	C3
C23	*G4	C425	*A3	IC101	F5	Q414	C3
C24	G4	C426	*A3	IC102	E4	Q415	C3
C25	*H4	C427	*A3	IC103	*E5	Q416	C3
C101	*F5	C428	*A3	IC104	F4	Q417	*C3
C102	*F5	C429	*A3	IC105	*E4	Q418	*C3
C103	*F5	C430	*B3	IC106	E3	Q419	*C3
C104	*F5	C431	*B3	IC107	E2	Q420	*C3
C105	*E5	C432	*A3	IC201	G5	Q421	C3
C106	*E2	C433	B3	IC202	F4	Q422	C3
C107	*F3	C434	*B3	IC203	*F5	Q423	C3
C108	*F4	C435	*B3	IC204	G4	Q424	*C1
C109	*F3	C436	*B3	IC205	*F4	Q425	D5
C110	E3	C437	*B3	IC206	F3	Q426	D5
C111	E4	C438	*B3	IC207	F2	Q427	E5
C112	E4	C439	*B3	IC301	H5	Q428	E5
C113	*E3	C440	*C4	IC302	G4	Q429	*D5
C114	*F3	C441	*C4	IC303	*G4	Q430	E5
C115	F3	C442	*C4	IC304	H3	Q431	E5
C116	E3	C443	*C4	IC305	*H4	Q432	*E5
C117	*E3	C444	*C4	IC306	H3	Q433	*E4
C118	F2	C445	*C4	IC307	H2	Q434	E4
C119	*E3	C446	*B4	IC401	C5	Q435	E4
C120	*F2	C447	*C5	IC402	C5	Q436	*D4
C121	*E2	C448	*C4	IC403	*A5	Q437	*D4
C122	*F2	C449	*C4	IC405	A3	Q438	*E4
C123	E2	C450	*C4	IC406	A3	Q601	*D2
C124	*F2	C451	*C4	IC407	A3	Q602	*E2
C125	*F3	C452	*C5	IC408	B3	Q603	*E2
C201	*G5	C453	*C4	IC409	C3	Q604	*D2
C202	*G5	C454	*C4	IC410	B5	Q609	*B1
C203	*G5	C455	*C4	IC411	C4	Q610	*C1
C204	*F5	C457	*D5	IC412	C5	Q613	E2
C205	*F5	C458	*D5	IC413	D5		
C206	*F2	C459	*D5	IC414	D4	RV101	E4
C207	*G3	C460	*C5	IC415	E4	RV102	E4
C208	*G4	C461	*C5	IC416	D4	RV201	F4
C209	*G3	C462	*D5	IC417	D4	RV202	F4
C210	F3	C463	*E5	IC418	D3	RV301	G4
C211	F4	C464	*D5	IC601	E2	RV302	G4
C212	F4	C465	*E5	IC602	D2	RV402	B5
C213	*F3	C466	*D5	IC607	E2	RV403	A3
C214	*G3	C467	E5	IC608	*B2	RV404	C4
C215	G3	C468	E4	IC609	*A2	RV406	B4
C216	F3	C469	D4	IC610	*A2		
C217	*F3	C470	D4	IC611	A2		
C218	G2	C471	*D4	IC612	*A2		
C219	*F3	C472	*D4				
C220	*G2	C473	*E3	LV401	B5		
C221	*F2	C474	E3				
C222	*G2	C475	*D3	Q2	*G1		
C223	F2	C476	*D3	Q3	*H1		
C224	*G2	C477	*D3	Q4	G1		
C225	*G3	C478	*D3	Q5	H1		
C301	*H5	C479	*D3	Q101	F3		
C302	*H5	C480	*D3	Q102	F3		
C303	*H5	C481	*D2	Q103	F3		
C304	*H5	C482	*D3	Q104	F3		
C305	*G5	C483	*D2	Q105	F3		
C306	*G5	C484	*D5	Q106	F3		
C307	*H3	C485	*D4	Q107	*F2		
C308	*H4	C486	*D3	Q108	E3		
C309	*H3	C487	E3	Q109	E3		
C310	H3	C601	E2	Q110	E3		
C311	G3	C602	*D2	Q201	G3		
C312	G3	C615	*A2	Q202	G3		
C313	*G3	C616	*A2	Q203	G3		
C314	*H3			Q204	G3		
C315	H3	DL101	F4	Q205	G3		
C316	G3	DL102	F4	Q206	G3		
C317	*G3	DL201	G4	Q207	*G2		
C318	H2	DL202	G4	Q208	F3		
C319	*G2	DL301	H4	Q209	F3		
C320	*H2	DL302	H4	Q210	F3		

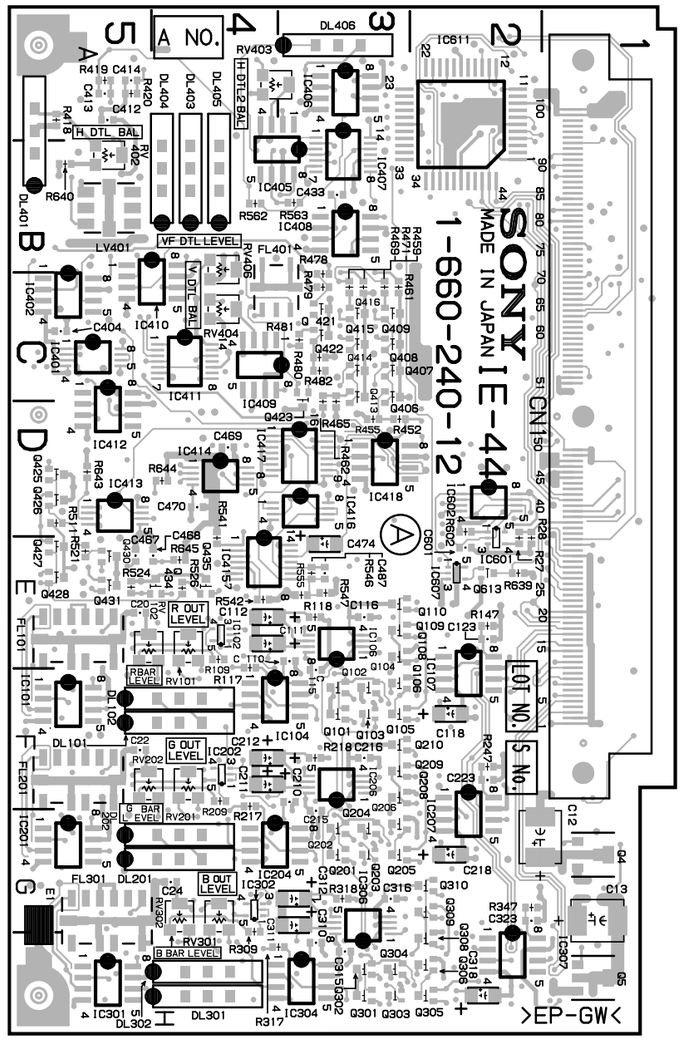

HDC-700 : S/N 10043 and Higher
HDC-750 : S/N 10086 and Higher

IE-44 -A SIDE-
1-660-240-12

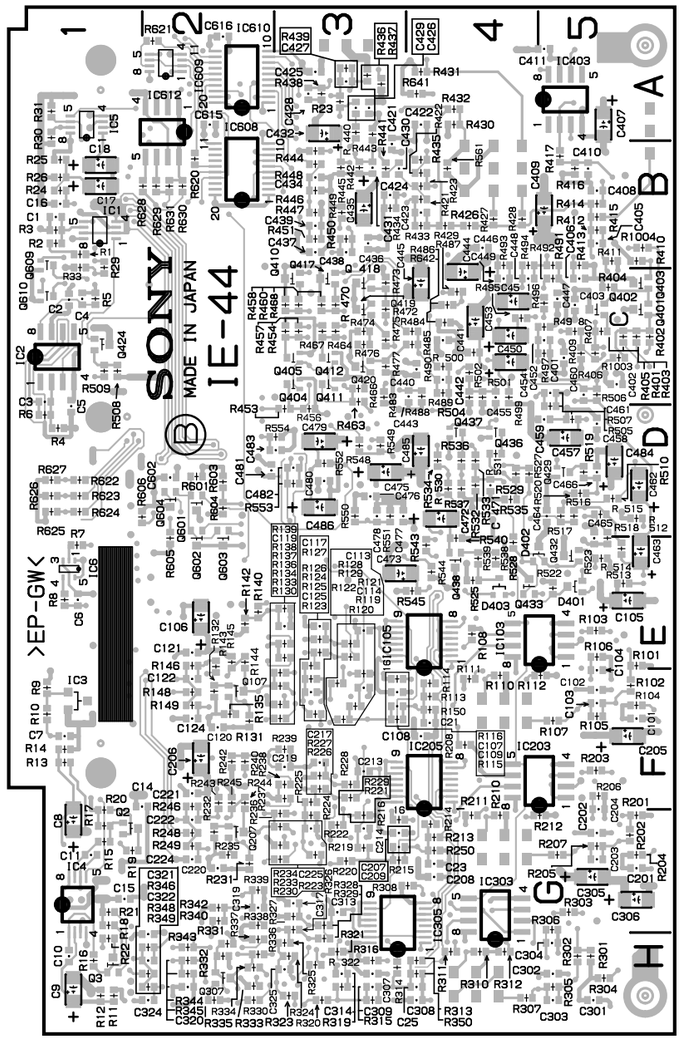

IE-44 -B SIDE-
1-660-240-12

R1	*B1	R216	*G3	R415	*B5	R514	*E5
R2	*B1	R217	F4	R416	*B5	R515	*D5
R3	*B1	R218	F3	R417	*B5	R516	*D5
R4	*D1	R219	*G3	R418	A5	R517	*D5
R5	*C1	R220	*G3	R419	A5	R518	*E5
R6	*D1	R221	*G3	R420	A5	R519	*D5
R7	*E1	R222	*G3	R421	*B4	R520	*D5
R8	*E1	R223	*G3	R422	*B4	R521	E5
R9	*F1	R224	*G3	R423	*B4	R522	*E5
R10	*F1	R225	*F3	R426	*B4	R523	*E5
R11	*H1	R226	*F3	R427	*B4	R524	E5
R12	*H1	R227	*F3	R428	*B4	R525	*E4
R13	*F1	R228	*F3	R429	*B4	R526	E4
R14	*F1	R229	*F3	R430	*A4	R527	*D4
R15	*G1	R230	*G3	R431	*A4	R528	*E4
R16	*H1	R231	*G2	R432	*A4	R529	*D4
R17	*G1	R232	*G2	R433	*B4	R530	*D4
R18	*G1	R233	*G3	R434	*B3	R531	*D4
R19	*G1	R234	*G3	R435	*B4	R532	*D4
R20	*F1	R235	*G2	R436	*A3	R533	*D4
R21	*G1	R236	*G3	R437	*A3	R534	*D4
R22	*H1	R237	*F3	R438	*A3	R535	*D4
R23	*A3	R238	*F3	R439	*A3	R536	*D4
R24	*B1	R239	*F3	R440	*A3	R537	*D4
R25	*B1	R240	*F2	R441	*B3	R538	*E4
R26	*B1	R242	*F2	R442	*B3	R539	*E4
R27	E2	R243	*F2	R443	*A3	R540	*E4
R28	E2	R244	*F2	R444	*B3	R541	E4
R29	*B1	R245	*F2	R445	*B3	R542	E4
R30	*A1	R246	*F2	R446	*B3	R543	*E4
R31	*A1	R247	F2	R447	*B3	R544	*E4
R33	*B1	R248	*G2	R448	*B3	R545	*E4
R101	*E5	R249	*G2	R449	*B3	R546	E3
R102	*F5	R250	*G4	R450	*B3	R547	E3
R103	*E5	R301	*H5	R451	*B3	R548	*D3
R104	*F5	R302	*H5	R452	D3	R549	*D3
R105	*F5	R303	*G5	R453	*D3	R550	*D3
R106	*E5	R304	*H5	R454	*C3	R551	*D3
R107	*F5	R305	*H5	R455	D3	R552	*D3
R108	*E4	R306	*G5	R456	*D3	R553	*D3
R109	E4	R307	*H4	R457	*C3	R554	*D2
R110	*F4	R308	*G3	R458	*C3	R555	E3
R111	*F4	R309	G4	R459	C3	R561	*B4
R112	*F5	R310	*H4	R460	*C3	R562	B4
R113	*F4	R311	*H4	R461	C3	R563	B3
R114	*F4	R312	*H4	R462	C3	R601	*D2
R115	*F3	R313	*H4	R463	*C3	R602	D2
R116	*F3	R314	*H3	R464	*C3	R603	*D2
R117	E4	R315	*H3	R465	C3	R604	*D2
R118	E3	R316	*H3	R466	*C3	R605	*E2
R119	*F3	R317	H3	R467	*C3	R606	*D1
R120	*F3	R318	G3	R468	*C3	R620	*B2
R121	*F3	R319	*H3	R469	C3	R621	*A2
R122	*F3	R320	*H3	R470	*C3	R622	*D1
R123	*F3	R321	*H3	R471	C3	R623	*D1
R124	*E3	R322	*H3	R472	*C3	R624	*D1
R125	*F3	R323	*H3	R473	*C3	R625	*D1
R126	*E3	R324	*H3	R474	*C3	R626	*D1
R127	*E3	R325	*H3	R475	*C3	R627	*D1
R128	*E3	R326	*G3	R476	*C3	R628	*B1
R129	*E3	R327	*G3	R477	*C3	R629	*B2
R130	*F3	R328	*G3	R478	C3	R630	*B2
R131	*F2	R329	*H3	R479	C3	R631	*B2
R132	*F2	R330	*H2	R480	C3	R639	E2
R133	*F3	R331	*H2	R481	C3	R640	B5
R134	*F3	R332	*H2	R482	C3	R641	*A4
R135	*F2	R333	*H2	R483	*C3	R642	*C4
R136	*F3	R334	*H2	R484	*C4	R643	D5
R137	*E3	R335	*H2	R485	*C4	R644	D4
R138	*E3	R336	*H2	R486	*C4	R645	E4
R139	*E3	R337	*H2	R487	*C4	R1003	*C5
R140	*E2	R338	*G2	R488	*C4	R1004	*B5
R142	*E2	R339	*G2	R489	*C4		
R143	*E2	R340	*G2	R490	*C4	*:B SIDE	
R144	*E2	R342	*G2	R491	*B5		
R145	*E2	R343	*H2	R492	*C5		
R146	*E2	R344	*H2	R493	*B4		
R147	E2	R345	*H2	R494	*B4		
R148	*F2	R346	*H2	R495	*C4		
R149	*F2	R347	G2	R496	*C5		
R150	*F4	R348	*H2	R497	*C5		
R201	*G5	R349	*H2	R498	*C5		
R202	*G5	R350	*H4	R499	*C4		
R203	*F5	R401	*C5	R500	*C4		
R204	*G5	R402	*C5	R501	*C4		
R205	*G5	R403	*C5	R502	*C4		
R206	*F5	R404	*C5	R504	*C4		
R207	*G5	R405	*C5	R505	*D5		
R208	*F4	R406	*C5	R506	*C5		
R209	F4	R407	*C5	R507	*D5		
R210	*G4	R409	*C5	R508	*C1		
R211	*G4	R410	*B5	R509	*C1		
R212	*G5	R411	*B5	R510	*D5		
R213	*G4	R412	*B5	R511	D5		
R214	*G4	R413	*B5	R512	*D5		
R215	*G3	R414	*B5	R513	*E5		

IE-44 (1-660-240-11)

CN1	D1	C409	*B5	FL401	C3	Q406	C3
		C410	*B5			Q407	C3
C1	*B1	C411	*A5	IC1	*B1	Q408	C3
C2	*C1	C412	A5	IC2	*C1	Q409	C3
C4	*C1	C413	A5	IC3	*F1	Q410	*C3
C5	*D1	C414	A5	IC4	*G1	Q411	*C3
C6	*E1	C421	*B3	IC5	*A1	Q412	*C3
C7	*F1	C422	*A4	IC6	*E1	Q413	C3
C8	*G1	C423	*B4	IC101	F5	Q414	C3
C9	*H1	C424	*B3	IC102	E4	Q415	C3
C10	*H1	C425	*A3	IC103	*E5	Q416	C3
C11	*G1	C426	*A3	IC104	F4	Q417	*C3
C12	G1	C428	*A3	IC105	*E4	Q418	*C3
C13	G1	C429	*A3	IC106	E3	Q419	*C3
C14	*F1	C430	*B3	IC107	E2	Q420	*C3
C15	*G1	C431	*B3	IC201	G5	Q421	C3
C16	*B1	C432	*A3	IC202	F4	Q422	C3
C17	*B1	C433	B3	IC203	*F5	Q423	C3
C18	*B1	C434	*B3	IC204	G4	Q424	*C1
C20	E5	C435	*B3	IC205	*F4	Q425	D5
C21	*F4	C436	*B3	IC206	F3	Q426	D5
C22	F5	C437	*B3	IC207	F2	Q427	E5
C23	*G4	C438	*B3	IC301	H5	Q428	E5
C24	G4	C439	*B3	IC302	G4	Q429	*D5
C25	*H4	C440	*C4	IC303	*G4	Q430	E5
C101	*F5	C441	*C4	IC304	H3	Q431	E5
C102	*F5	C442	*C4	IC305	*H4	Q432	*E5
C104	*F5	C443	*C4	IC306	H3	Q433	*E4
C105	*E5	C444	*C4	IC307	H2	Q434	E4
C106	*E2	C445	*C4	IC401	C5	Q435	E4
C107	*F3	C446	*C4	IC402	C5	Q436	*D4
C108	*F4	C447	*C5	IC403	*A5	Q437	*D4
C110	E3	C449	*C4	IC405	A3	Q438	*E4
C111	E4	C450	*C4	IC406	A3	Q601	*D2
C112	E4	C451	*C4	IC407	A3	Q602	*E2
C113	*E3	C452	*C5	IC408	B3	Q603	*E2
C114	*F3	C453	*C4	IC409	C3	Q604	*D2
C115	F3	C454	*C4	IC410	B5	Q609	*B1
C116	E3	C455	*C4	IC411	C4	Q610	*C1
C117	*E3	C457	*D5	IC412	C5	Q613	E2
C118	F2	C458	*D5	IC413	D5		
C119	*E3	C459	*D5	IC414	D4	RV101	E4
C120	*F2	C460	*C5	IC415	E4	RV102	E4
C121	*E2	C461	*C5	IC416	D4	RV201	F4
C123	E2	C462	*D5	IC417	D4	RV202	F4
C124	*F2	C463	*E5	IC418	D3	RV301	G4
C201	*G5	C464	*D5	IC601	E2	RV302	G4
C202	*G5	C465	*E5	IC602	D2	RV402	B5
C204	*F5	C466	*D5	IC607	E2	RV403	A3
C205	*F5	C467	E5	IC608	*B2	RV404	C4
C206	*F2	C468	E4	IC609	*A2	RV406	B4
C207	*G3	C469	D4	IC610	*A2	RV407	D5
C208	*G4	C470	D4	IC611	A2	RV408	D4
C210	F3	C471	*D4	IC612	*A2	RV409	E4
C211	F4	C472	*D4				
C212	F4	C473	*E3	LV401	B5		
C213	*F3	C474	E3				
C214	*G3	C475	*D3	Q2	*G1		
C215	G3	C476	*D3	Q3	*H1		
C216	F3	C477	*D3	Q4	G1		
C217	*F3	C478	*D3	Q5	H1		
C218	G2	C479	*D3	Q101	F3		
C219	*F3	C480	*D3	Q102	F3		
C220	*G2	C481	*D2	Q103	F3		
C221	*F2	C482	*D3	Q104	F3		
C223	F2	C483	*D2	Q105	F3		
C224	*G2	C484	*D5	Q106	F3		
C301	*H5	C485	*D4	Q107	*F2		
C302	*H5	C486	*D3	Q108	E3		
C304	*H5	C487	E3	Q109	E3		
C305	*G5	C601	E2	Q110	E3		
C306	*G5	C602	*D2	Q201	G3		
C307	*H3	C615	*A2	Q202	G3		
C308	*H4	C616	*A2	Q203	G3		
C310	H3			Q204	G3		
C311	G3	DL101	F4	Q205	G3		
C312	G3	DL102	F4	Q206	G3		
C313	*G3	DL201	G4	Q207	*G2		
C314	*H3	DL202	G4	Q208	F3		
C315	H3	DL301	H4	Q209	F3		
C316	G3	DL302	H4	Q210	F3		
C317	*G3	DL401	A5	Q301	H3		
C318	H2	DL403	B4	Q302	H3		
C319	*G2	DL404	B4	Q303	H3		
C320	*H2	DL405	B4	Q304	H3		
C321	*H2	DL406	A3	Q305	H2		
C323	G2			Q306	H2		
C324	*H2	D401	*E5	Q307	*H2		
C401	*C5	D402	*E5	Q308	H2		
C402	*C5	D403	*E4	Q309	G2		
C403	*C5			Q310	G2		
C404	C5	E1	G5	Q401	*C5		
C405	*B5			Q402	*C5		
C406	*C5	FL101	E5	Q403	*C5		
C407	*A5	FL201	F5	Q404	*C3		
C408	*B5	FL301	G5	Q405	*C3		

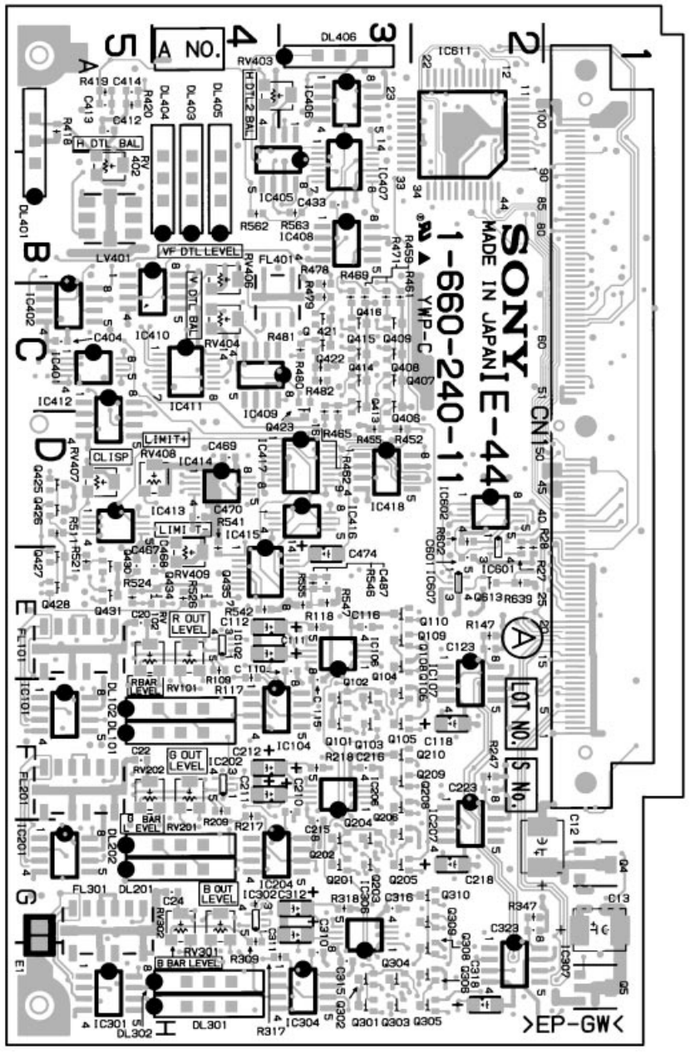

HDC-700 : S/N 10001 through 10042
HDC-750 : S/N 10001 through 10085

IE-44 -A SIDE-
1-660-240-11

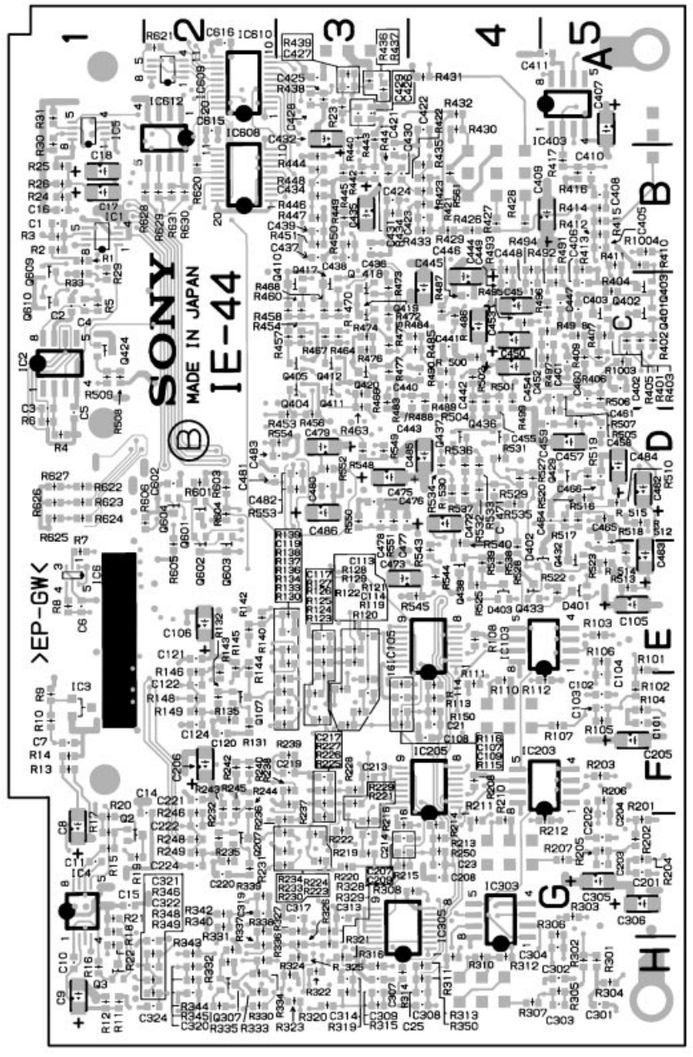

IE-44 -B SIDE-
1-660-240-11

R1	*B1	R217	F4	R419	A5	R524	E5
R2	*B1	R218	F3	R420	A5	R525	*E4
R3	*B1	R219	*G3	R423	*B4	R526	E4
R4	*D1	R220	*G3	R426	*B4	R527	*D4
R5	*C1	R221	*G3	R427	*B4	R528	*E4
R6	*D1	R222	*G3	R428	*B4	R529	*D4
R7	*E1	R223	*G3	R429	*B4	R530	*D4
R8	*E1	R224	*G3	R430	*A4	R531	*D4
R9	*F1	R225	*G3	R431	*A4	R532	*D4
R10	*F1	R226	*F3	R432	*A4	R533	*D4
R11	*H1	R227	*F3	R433	*B4	R534	*D4
R12	*H1	R228	*F3	R434	*B3	R535	*D4
R13	*F1	R229	*F3	R435	*B4	R536	*D4
R14	*F1	R230	*G3	R436	*A3	R537	*D4
R15	*G1	R231	*G2	R437	*A3	R538	*E4
R16	*H1	R232	*G2	R438	*A3	R539	*E4
R17	*G1	R233	*G3	R439	*A3	R540	*E4
R18	*G1	R234	*G3	R440	*A3	R541	E4
R19	*G1	R235	*G2	R441	*B3	R542	E4
R20	*F1	R236	*G3	R442	*B3	R543	*E4
R21	*G1	R237	*F3	R443	*A3	R544	*E4
R22	*H1	R238	*F3	R444	*B3	R545	*E4
R23	*A3	R239	*F3	R445	*B3	R546	E3
R24	*B1	R240	*F2	R446	*B3	R548	*D3
R25	*B1	R242	*F2	R447	*B3	R549	*D3
R26	*B1	R243	*F2	R448	*B3	R550	*D3
R27	E2	R244	*F2	R449	*B3	R551	*D3
R28	E2	R245	*F2	R450	*B3	R552	*D3
R29	*B1	R246	*F2	R451	*B3	R553	*D3
R30	*A1	R247	F2	R452	D3	R554	*D2
R31	*A1	R248	*G2	R453	*D3	R555	E3
R33	*B1	R249	*G2	R454	*C3	R601	*D2
R101	*E5	R301	*H5	R455	D3	R602	D2
R102	*F5	R302	*H5	R456	*D3	R603	*D2
R103	*E5	R303	*G5	R457	*C3	R604	*D2
R104	*F5	R304	*H5	R458	*C3	R605	*E2
R105	*F5	R305	*H5	R459	C3	R606	*D1
R106	*E5	R306	*G5	R460	*C3	R620	*B2
R107	*F5	R307	*H4	R461	C3	R621	*A2
R108	*E4	R308	*G3	R462	C3	R622	*D1
R109	E4	R309	G4	R463	*C3	R623	*D1
R110	*F4	R310	*H4	R464	*C3	R624	*D1
R111	*F4	R311	*H4	R467	*C3	R625	*D1
R112	*F5	R312	*H4	R468	*C3	R626	*D1
R113	*F4	R313	*H4	R469	C3	R627	*D1
R114	*F4	R314	*H3	R470	*C3	R628	*B1
R115	*F3	R315	*H3	R471	C3	R629	*B2
R116	*F3	R316	*H3	R472	*C3	R630	*B2
R117	E4	R317	H3	R474	*C3	R631	*B2
R118	E3	R318	G3	R475	*C3	R639	E2
R119	*F3	R319	*H3	R476	*C3	R1003	*C5
R120	*F3	R320	*H3	R477	*C3	R1004	*B5
R121	*F3	R321	*H3	R478	C3		
R122	*F3	R322	*H3	R480	C3	*:B SIDE	
R123	*F3	R323	*H3	R481	C3		
R124	*F3	R324	*H3	R482	C3		
R125	*F3	R325	*H3	R483	*C3		
R126	*E3	R326	*H3	R484	*C4		
R127	*E3	R327	*G3	R485	*C4		
R128	*E3	R328	*G3	R486	*C4		
R129	*E3	R329	*H3	R487	*C4		
R130	*F3	R330	*H2	R488	*C4		
R131	*F2	R331	*H2	R489	*C4		
R132	*F2	R332	*H2	R490	*C4		
R133	*F3	R333	*H2	R491	*B5		
R134	*F3	R334	*H2	R492	*C5		
R135	*F2	R335	*H2	R493	*B4		
R136	*F3	R336	*H2	R494	*B4		
R137	*E3	R337	*H2	R495	*C4		
R138	*E3	R338	*G2	R496	*C5		
R139	*E3	R339	*G2	R497	*C5		
R140	*E2	R340	*G2	R498	*C5		
R142	*E2	R342	*G2	R499	*C4		
R143	*E2	R343	*H2	R500	*C4		
R144	*E2	R344	*H2	R501	*C4		
R145	*E2	R345	*H2	R502	*C4		
R146	*E2	R346	*H2	R504	*C4		
R147	E2	R347	G2	R505	*D5		
R148	*F2	R348	*H2	R506	*C5		
R149	*F2	R349	*H2	R507	*D5		
R201	*G5	R401	*C5	R508	*C1		
R202	*G5	R402	*C5	R509	*C1		
R203	*F5	R404	*C5	R510	*D5		
R204	*G5	R405	*C5	R511	D5		
R205	*G5	R406	*C5	R512	*D5		
R206	*F5	R407	*C5	R513	*E5		
R207	*G5	R409	*C5	R514	*E5		
R208	*F4	R410	*B5	R515	*D5		
R209	F4	R411	*B5	R516	*D5		
R210	*G4	R412	*B5	R517	*D5		
R211	*G4	R413	*B5	R518	*E5		
R212	*G5	R414	*B5	R519	*D5		
R213	*G4	R415	*B5	R520	*D5		
R214	*G4	R416	*B5	R521	E5		
R215	*G3	R417	*B5	R522	*E5		
R216	*G3	R418	A5	R523	*E5		

IF-569 (1-660-238-12,13)

BT1	G4	C90	B3	IC16	F5
		C91	B3	IC17	F5
CNI26	F2	C92	*G3	IC18	*F5
		C93	*G3	IC19	*H4
CN1	*A3	C94	*C4	IC20	D1
CN2	*G4	C95	D2	IC21	*H4
CN3	E4	C96	C4	IC22	F4
		C97	*C4	IC23	*F5
C1	A2	C98	A2	IC24	*F5
C2	D1	C99	A2	IC25	E2
C3	*F1	C100	A2	IC26	F2
C4	D4	C101	A2	IC27	*E5
C5	G5	C102	A1	IC28	E5
C6	C4	C103	A1	IC29	G2
C7	D4	C104	A1	IC30	F5
C8	*B3	C105	A1	IC31	H3
C9	*B5	C106	*A3	IC32	*G2
C10	A5	C107	*C4	IC33	C2
C11	*A5	C108	*C5	IC34	D2
C12	A4	C109	*B4	IC35	*E3
C13	C4	C110	*C4	IC36	*E2
C14	B5	C111	*B3	IC37	B2
C15	*B5	C112	*G3	IC38	*G1
C16	*A5	C113	*G3	IC39	*H2
C17	*B5	C114	*B3	IC40	B2
C18	*C5	C115	*G3	IC41	*F1
C19	D5	C116	*G3	IC42	*B3
C20	E5	C117	*B3	IC43	*H3
C21	*D5	C118	*C3	IC44	D3
C22	*D5	C120	B4	IC45	C4
C23	*D5	C121	B5	IC46	*C3
C24	*C5	C122	*B4	IC47	H2
C25	*D5	C123	B3	IC48	G2
C26	*D5	C124	*H1	IC49	H2
C27	*C5			IC50	B3
C28	*C5	D1	A5	IC51	C2
C29	*D5	D2	C5	IC52	*F3
C30	C5	D3	D5	IC53	C4
C32	A4	D4	C5	IC54	*C4
C33	*A5	D5	C5	IC55	H1
C34	*A5	D6	D5	IC56	G2
C35	*G3	D7	C5	IC99	B1
C36	*F3	D8	*G3	IC100	*C2
C37	*F3	D9	*G3		
C38	*H3	D10	*F3	L1	*F4
C39	A3	D11	*G3	L2	C5
C40	*A3	D12	*B2	L3	B5
C41	*D4	D13	*B2	L5	*A3
C42	A2	D14	F5	L6	C4
C43	*D4	D15	*B1	L7	*A4
C44	*D4	D16	G5		
C45	*D4	D17	E4	PH1	A2
C46	*D4	D18	E4	PH2	A2
C47	*C4	D19	D4		
C48	A3	D20	D4	Q1	*B4
C49	*A2	D21	*H4	Q2	A5
C50	*A2	D22	E4	Q3	*B4
C51	A2	D23	E4	Q4	*A5
C52	E2	D24	F4	Q5	*A4
C53	E2	D25	*D4	Q6	A4
C54	*F3	D26	*D4	Q7	*D4
C55	F2	D27	*G4	Q8	*D4
C56	F3	D28	F4	Q9	F5
C57	*H3	D29	F4	Q10	D4
C58	*H3	D30	*H4	Q11	D4
C59	H3	D31	*F4	Q12	*F5
C60	*E4	D32	G3	Q13	*E4
C61	*E4	D33	F5	Q14	*E4
C62	E5	D34	*G4	Q15	*E4
C63	*G1	D35	*G3	Q16	*E4
C64	*G1	D37	*C1	Q17	*D4
C65	*F5	D38	*A1	Q18	*D4
C66	*E4	D39	*A1	Q19	B2
C67	*E4	D40	A1	Q20	B3
C68	G2	D41	A1	Q21	B3
C69	D2	D42	C5	Q22	*G3
C70	B4	D50	D4	Q23	F4
C71	*E4	D51	D4	Q24	*G3
C72	*D3			Q25	B5
C73	D2	E1	G1	Q26	*B4
C74	*G4			Q27	*G3
C75	*B3	IC1	D5		
C76	*C3	IC2	C5	RB1	A1
C77	*C4	IC3	A5	RB2	*A1
C78	B5	IC4	*B5	RB3	F1
C79	*B3	IC5	D5	RB4	E3
C80	*C3	IC6	*B1	RB10	A2
C81	*B3	IC7	*G4	RB11	*A2
C82	*B3	IC8	A3	RB12	A1
C83	C3	IC9	D4	RB13	*A1
C84	*F2	IC10	F5		
C85	B2	IC11	*F5		
C86	*B2	IC12	*D4		
C87	H2	IC13	*D4		
C88	H2	IC14	*A2		
C89	*B2	IC15	A2		

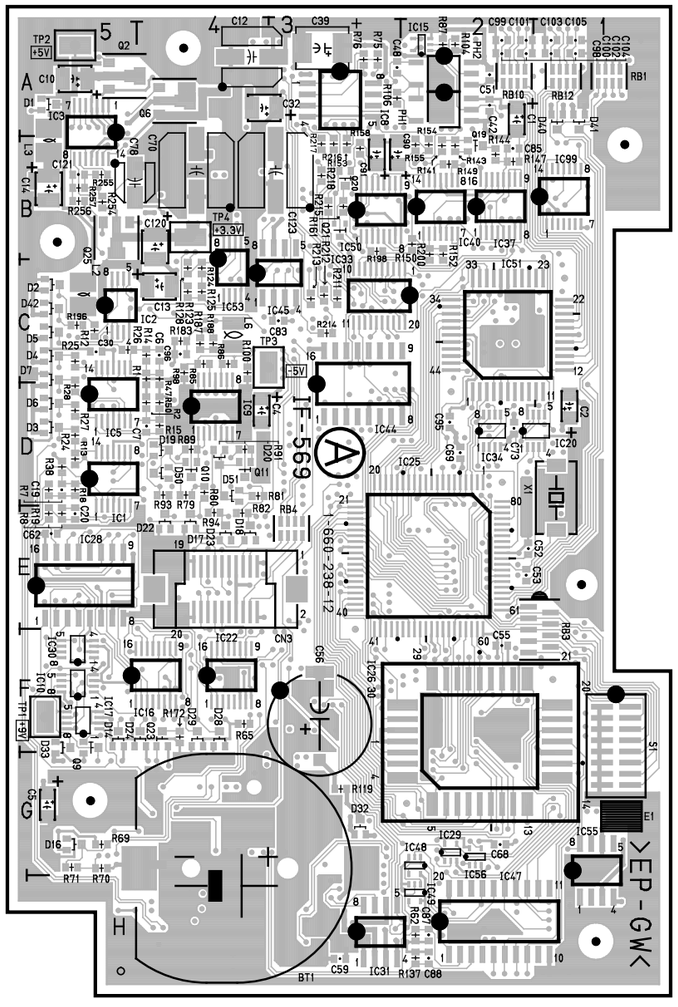

HDC-700 : S/N 10013 and Higher
S/N 11001 and Higher (for suffix -13)
HDC-750 : S/N 10041 and Higher

IF-569 -A SIDE-
1-660-238-12, 13

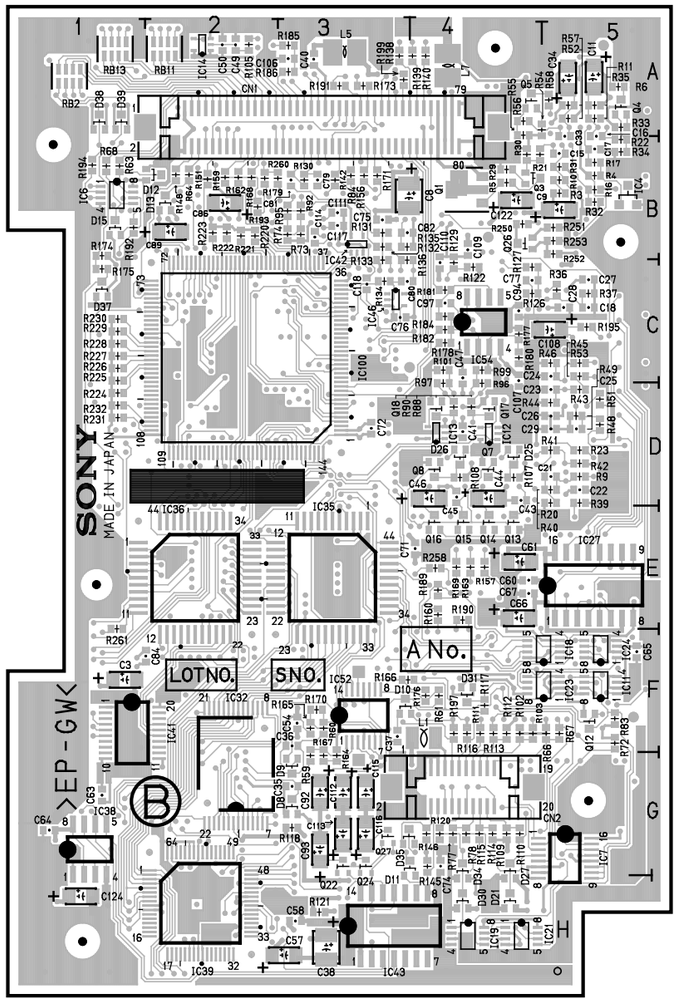

IF-569 -B SIDE-
1-660-238-12, 13

R1	C4	R96	*D4	R192	*B1
R2	D4	R97	*D4	R193	*B2
R3	*B5	R98	C4	R195	*C5
R4	*B5	R99	*C4	R196	C5
R5	*B4	R100	C4	R197	*F4
R6	*A5	R101	*C4	R198	B3
R7	D5	R102	*F4	R199	*A3
R8	E5	R103	*F4	R200	B2
R9	*D5	R104	A2	R211	C3
R10	*B5	R105	*A2	R212	C3
R11	*A5	R106	A3	R213	C3
R12	C5	R107	*D4	R214	C3
R13	D5	R108	*D4	R215	B3
R14	C4	R109	*G4	R216	B3
R15	D4	R110	*G4	R217	B3
R16	*B5	R111	*F4	R218	B3
R17	*B5	R112	*F4	R220	*B2
R18	D5	R113	*F4	R222	*B2
R19	E5	R114	*G4	R225	*C1
R20	*D5	R115	*G4	R230	*C1
R21	*B4	R116	*F4	R231	*D1
R22	*B5	R117	*F4	R232	*D1
R23	*D5	R118	*G3	R250	*B4
R24	D5	R119	G3	R251	*B5
R25	C5	R120	*G4	R252	*B5
R26	C5	R121	*H3	R253	*B5
R27	D5	R122	*C4	R254	B5
R28	D5	R123	C4	R255	B5
R29	*B4	R124	C4	R256	B5
R30	*B4	R125	C4	R257	B5
R31	*B5	R126	*C4	R258	*E4
R32	*B5	R127	*C4	R260	*B2
R33	*A5	R128	C4	R261	*E1
R34	*B5	R129	*C4		
R35	*A5	R130	*B3	S1	F1
R36	*C5	R131	*B3		
R37	*C5	R132	*B3	TP1	F5
R38	D5	R133	*C3	TP2	A5
R39	*D5	R134	*C3	TP3	C3
R40	*D5	R135	*B3	TP4	B4
R41	*D5	R136	*C3		
R42	*D5	R137	H2	X1	D1
R43	*D5	R138	*A3		
R44	*D5	R139	*A4	*:B SIDE	
R45	*C5	R140	*A4		
R46	*C5	R141	B2		
R47	C4	R142	*B3		
R48	*D5	R143	B2		
R49	*D5	R144	B2		
R50	D4	R145	*G4		
R51	*D5	R146	*G4		
R52	*A5	R147	B2		
R53	*C5	R148	*B2		
R54	*A4	R149	B2		
R55	*A4	R150	B2		
R56	*A4	R151	*B2		
R57	*A5	R152	B2		
R58	*A5	R153	B3		
R59	*G3	R154	B2		
R60	*F3	R155	B2		
R61	*F4	R156	*B3		
R62	H2	R157	*E4		
R63	*B1	R158	B3		
R64	*B2	R159	*B2		
R65	F4	R160	*E4		
R66	*F5	R161	B3		
R67	*F5	R162	*B2		
R68	*B1	R163	*E4		
R69	G5	R164	*G3		
R70	G5	R165	*F3		
R71	G5	R166	*F3		
R72	*F5	R167	*G3		
R73	*B3	R168	*B2		
R74	*B3	R169	*E4		
R75	A3	R170	*F3		
R76	A3	R171	*B3		
R77	*G4	R172	F4		
R78	*G4	R173	*A3		
R79	D4	R174	*B1		
R80	D4	R175	*C1		
R81	D4	R176	*F4		
R82	E4	R177	*C4		
R83	*F5	R178	*C4		
R84	*B3	R179	*B2		
R85	C4	R180	*C4		
R86	C4	R181	*C4		
R87	A2	R182	*C4		
R88	*D4	R183	C4		
R89	D4	R184	*C4		
R90	*D4	R185	*A3		
R91	D4	R186	*A3		
R92	*B3	R187	C4		
R93	D4	R188	C4		
R94	E4	R189	*E4		
R95	*B3	R190	*E4		
		R191	*A3		

IF-569 (1-660-238-11)

BT1	G4	C89	*B2	IC15	A2
		C90	B3	IC16	F5
CNI26	F2	C91	B3	IC17	F5
		C92	*G3	IC18	*F5
CN1	*A3	C93	*G3	IC19	*H4
CN2	*G4	C94	*C4	IC20	D1
CN3	E4	C95	D2	IC21	*H4
		C96	C4	IC22	F4
C1	A2	C97	*C4	IC23	*F5
C2	D1	C98	A2	IC24	*F5
C3	*F1	C99	A2	IC25	E2
C4	D4	C100	A2	IC26	F2
C5	G5	C101	A2	IC27	*E5
C6	C4	C102	A1	IC28	E5
C7	D4	C103	A1	IC29	G2
C8	*B3	C104	A1	IC30	F5
C9	*B5	C105	A1	IC31	H3
C10	A5	C106	*A3	IC32	*G2
C11	*A5	C107	*C4	IC33	C2
C12	A4	C108	*C5	IC34	D2
C13	C4	C109	*B4	IC35	*E3
C14	B5	C110	*C4	IC36	*E2
C15	*B5	C111	*B3	IC37	B2
C16	*A5	C112	*G3	IC38	*H1
C17	*B5	C113	*G3	IC39	*H2
C18	*C5	C114	*B3	IC40	B2
C19	D5	C115	*G3	IC41	*F1
C20	E5	C116	*G3	IC42	*B3
C21	*D5	C117	*B3	IC43	*H3
C22	*D5	C118	*C3	IC44	D3
C23	*D5	C119	*B5	IC45	C4
C24	*C5	C120	B4	IC46	*C3
C25	*D5	C121	B5	IC47	H2
C26	*D5	C122	*B4	IC48	G2
C27	*C5	C123	B3	IC49	H2
C28	*C5			IC50	B3
C29	*D5	D1	A5	IC51	C2
C30	C5	D2	C5	IC52	*F3
C31	A4	D3	D5	IC53	C4
C32	A4	D4	C5	IC54	*C4
C33	*A5	D5	C5	IC100	*C2
C34	*A5	D6	D5		
C35	*G3	D7	C5	L1	*F4
C36	*F3	D8	*G3	L2	C5
C37	*F3	D9	*G3	L3	B5
C38	*H3	D10	*F3	L5	*A3
C39	A3	D11	*G3	L6	C4
C40	*A3	D12	*B2	L7	*A4
C41	*D4	D13	*B2		
C42	A2	D14	F5	PH1	A2
C43	*D4	D15	B1	PH2	A2
C44	*D4	D16	G5		
C45	*D4	D17	E4	Q1	*B4
C46	*D4	D18	E4	Q2	A5
C47	*C4	D19	D4	Q3	*B4
C48	A3	D20	D4	Q4	*A5
C49	*A2	D21	*H4	Q5	*A4
C50	*A2	D22	E4	Q6	A4
C51	A2	D23	E4	Q7	*D4
C52	E2	D24	F4	Q8	*D4
C53	E2	D25	*D4	Q9	F5
C54	*F3	D26	*D4	Q10	D4
C55	F2	D27	*G4	Q11	D4
C56	F3	D28	F4	Q12	*F5
C57	*H3	D29	F4	Q13	*E4
C58	*H3	D30	*H4	Q14	*E4
C59	H3	D31	*F4	Q15	*E4
C60	*E4	D32	G3	Q16	*E4
C61	*E4	D33	F5	Q17	*D4
C62	E5	D34	*G4	Q18	*D4
C63	*G1	D35	*G3	Q19	B2
C64	*G1	D37	B1	Q20	B3
C65	*F5	D38	*A1	Q21	B3
C66	*E4	D39	*A1	Q22	*G3
C67	*E4	D40	A1	Q23	F4
C68	G2	D41	A1	Q24	*G3
C69	D2	D42	C5	Q25	B5
C70	B4	D50	D4	Q26	*B4
C71	*E4	D51	D4	Q27	*G3
C72	*D3				
C73	D2	E1	H1	RB1	A1
C74	*G4			RB2	*A1
C75	*B3	IC1	D5	RB3	F1
C76	*C3	IC2	C5	RB4	E3
C77	*C4	IC3	A5	RB10	A2
C78	B5	IC4	*B5	RB11	*A2
C79	*B3	IC5	D5	RB12	A1
C80	*C3	IC6	*B1	RB13	*A1
C81	*B3	IC7	*G4		
C82	*B3	IC8	A3		
C83	C3	IC9	D4		
C84	*F2	IC10	F5		
C85	B2	IC11	*F5		
C86	*B2	IC12	*D4		
C87	H2	IC13	*D4		
C88	H2	IC14	*A2		

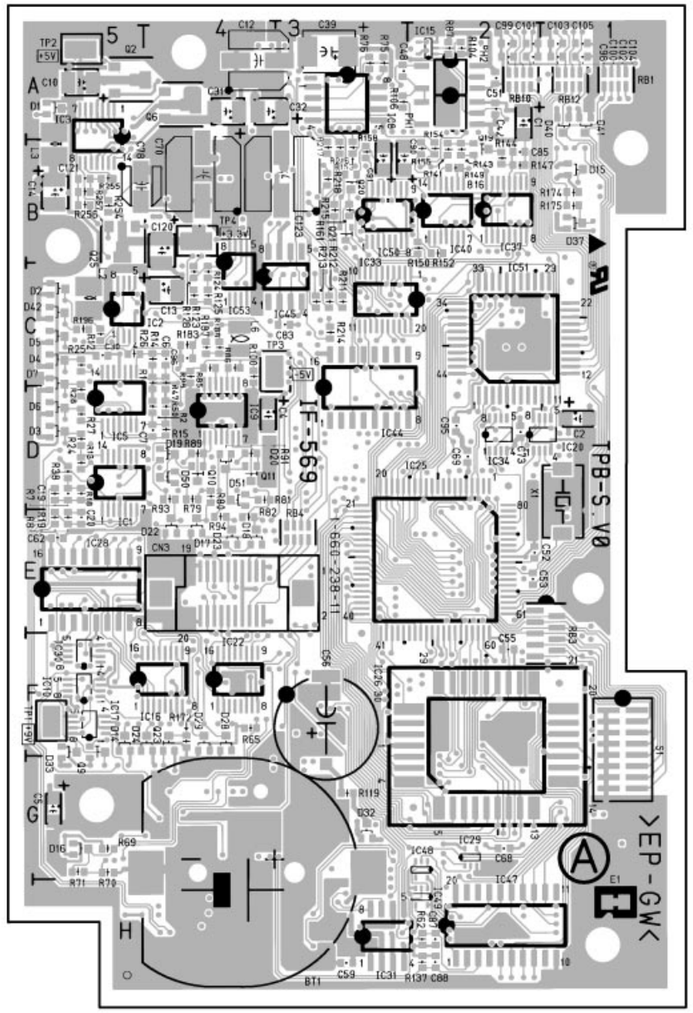

HDC-700 : S/N 10001 through 10012
HDC-750 : S/N 10001 through 10040

IF-569 -A SIDE-
1-660-238-11

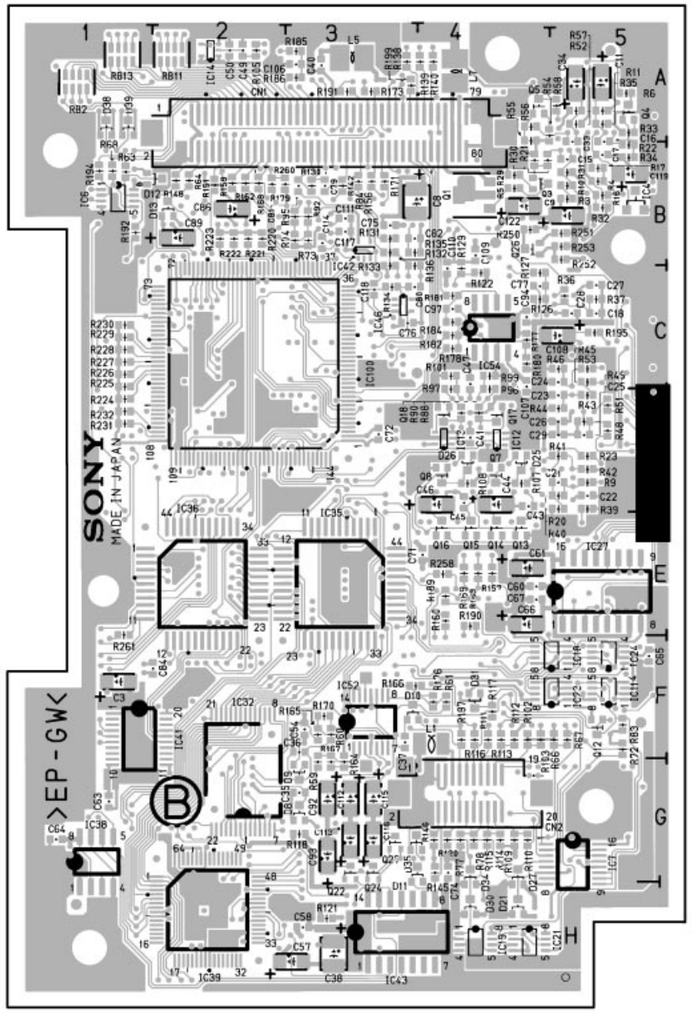

IF-569 -B SIDE-
1-660-238-11

R1	C4	R96	*D4	R192	*B1
R2	D4	R97	*D4	R194	*B1
R3	*B5	R98	C4	R195	*C5
R4	*B5	R99	*C4	R196	C5
R5	*B4	R100	C4	R197	*F4
R6	*A5	R101	*C4	R199	*A3
R7	D5	R102	*F4	R211	C3
R8	E5	R103	*F4	R212	C3
R9	*D5	R104	A2	R213	C3
R10	*B5	R105	*A2	R214	C3
R11	*A5	R106	A3	R215	B3
R12	C5	R107	*D4	R216	B3
R13	D5	R108	*D4	R217	B3
R14	C4	R109	*G4	R218	B3
R15	D4	R110	*G4	R220	*B2
R16	*B5	R111	*F4	R225	*C1
R17	*B5	R112	*F4	R230	*C1
R18	D5	R113	*F4	R231	*D1
R19	E5	R114	*G4	R232	*D1
R20	*D5	R115	*G4	R250	*B4
R21	*B4	R116	*F4	R251	*B5
R22	*B5	R117	*F4	R252	*B5
R23	*D5	R118	*G3	R253	*B5
R24	D5	R119	G3	R254	B5
R25	C5	R120	*G4	R255	B5
R26	C5	R121	*H3	R256	B5
R27	D5	R122	*C4	R257	B5
R28	D5	R123	C4	R258	*E4
R29	*B4	R124	C4	R260	*B2
R30	*B4	R125	C4	R261	*E1
R31	*B5	R126	*C4		
R32	*B5	R127	*C4	S1	F1
R33	*A5	R128	C4		
R34	*B5	R129	*C4	TP1	F5
R35	*A5	R130	*B3	TP2	A5
R36	*C5	R131	*B3	TP3	C3
R37	*C5	R132	*B3	TP4	B4
R38	D5	R133	*C3		
R39	*D5	R134	*C3	X1	D1
R40	*D5	R135	*B3		
R41	*D5	R136	*C3	*:B SIDE	
R42	*D5	R137	H2		
R43	*D5	R138	*A3		
R44	*D5	R139	*A4		
R45	*C5	R140	*A4		
R46	*C5	R141	B2		
R47	C4	R142	*B3		
R48	*D5	R143	B2		
R49	*D5	R144	B2		
R50	D4	R145	*G4		
R51	*D5	R146	*G4		
R52	*A5	R147	B2		
R53	*C5	R148	*B2		
R54	*A4	R149	B2		
R55	*A4	R150	B2		
R56	*A4	R151	*B2		
R57	*A5	R152	B2		
R58	*A5	R153	B3		
R59	*G3	R154	B2		
R60	*F3	R155	B2		
R61	*F4	R156	*B3		
R62	H2	R157	*E4		
R63	*B1	R158	B3		
R64	*B2	R159	*B2		
R65	F4	R160	*E4		
R66	*F5	R161	B3		
R67	*F5	R162	*B2		
R68	*B1	R163	*E4		
R69	G5	R164	*G3		
R70	G5	R165	*F3		
R71	G5	R166	*F3		
R72	*F5	R167	*G3		
R73	*B3	R168	*B2		
R74	*B3	R169	*E4		
R75	A3	R170	*F3		
R76	A3	R171	*B3		
R77	*G4	R172	F4		
R78	*G4	R173	*A3		
R79	D4	R174	B1		
R80	D4	R175	B1		
R81	D4	R176	*F4		
R82	E4	R177	*C4		
R83	*F5	R178	*C4		
R84	*B3	R179	*B2		
R85	C4	R180	*C4		
R86	C4	R181	*C4		
R87	A2	R182	*C4		
R88	*D4	R183	C4		
R89	D4	R184	*C4		
R90	*D4	R185	*A3		
R91	D4	R186	*A3		
R92	*B3	R187	C4		
R93	D4	R188	C4		
R94	E4	R189	*E4		
R95	*B3	R190	*E4		
		R191	*A3		

http://getMANUAL.com

VDA-31 (1-660-243-14)

CN1	D5	C402	D1	C704	*F1	L401	F1
CN101	F1	C403	*E1	C705	F1	L402	*D1
CN102	F1	C404	*E1	C706	*F1	L501	D1
CN301	H1	C405	*E1	C707	*D1	L502	D1
CN302	G1	C406	*E1	C708	*D1	L701	*E1
		C407	*E1	C709	*D1	L702	*E1
C1	*A1	C408	*E1	C710	*D1		
C3	*B5	C409	*E1	C801	*B1	Q1	*G5
C4	*B5	C410	*E1	C802	B1	Q2	*H5
C5	*G1	C411	*E1	C803	*B1	Q3	*G1
C6	*H1	C412	E1	C804	*B1	Q4	*G1
C7	G1	C413	E1	C805	*B1	Q101	F1
C8	H1	C414	E1			Q102	F1
C9	G5	C415	E1	DL101	F1	Q201	G1
C10	H5	C416	E1	DL301	H1	Q202	G1
C11	*B5	C417	E1			Q301	H1
C12	H5	C418	E1	D1	A1	Q302	H1
C13	G5	C419	E1	D501	*B1	Q501	*C1
C14	*G5	C420	*F1	D502	*B1	Q502	*C1
C15	*B5	C421	E1	D503	*A1	Q503	*C1
C16	B1	C422	*F1	D504	C1	Q504	B1
C17	B1	C423	*E1	D505	*C1	Q505	C1
C18	*C5	C424	E1	D601	*D1	Q506	C1
C101	F1	C425	*E1			Q507	C1
C102	F1	C426	E1	E1	H1	Q508	B1
C103	*F1	C427	*E1			Q509	B1
C104	F1	C428	E1	FL101	F1	Q510	B1
C105	F1	C429	E1	FL201	G1	Q511	B1
C106	*F1	C430	*E1	FL301	G1	Q512	B1
C111	*F1	C431	E1	FL401	E1	Q513	B1
C112	F1	C501	B1	FL402	E1	Q514	B1
C113	*F1	C502	A1	FL403	E1	Q515	A1
C114	*F1	C503	*A1	FL701	E1	Q516	A1
C115	F1	C504	*A1	FL702	C1	Q517	A1
C116	F1	C505	*A1			Q518	A1
C117	F1	C506	*A1	IC1	*B5	Q519	A1
C118	F1	C507	*A1	IC2	*B5	Q520	A1
C119	F1	C508	*A1	IC3	G5	Q521	A1
C120	*F1	C509	*B1	IC4	*B5	Q801	B1
C121	F1	C510	*A1	IC5	*G1	Q802	B1
C122	F1	C511	*A1	IC6	*C5	Q803	B1
C123	*F1	C512	*B1	IC7	*A1	Q804	B1
C124	*F1	C513	*B1	IC101	*F1	Q805	B1
C126	*F1	C514	*A1	IC103	*F1		
C127	*F1	C515	*B1	IC104	*F1	R1	*B5
C128	F1	C516	B1	IC105	F1	R2	*B5
C201	G1	C517	*A1	IC106	*F1	R3	*B5
C202	G1	C518	A1	IC201	*G1	R4	*B5
C203	*G1	C519	B1	IC202	*G1	R5	*B5
C204	F1	C520	C1	IC203	*G1	R6	*B5
C205	G1	C521	*C1	IC204	*G1	R7	*G1
C206	F1	C522	*D1	IC205	G1	R8	*G1
C207	F1	C523	*D1	IC206	*G1	R9	*G1
C208	G1	C524	D1	IC301	*H1	R10	*G1
C209	G1	C525	D1	IC303	*H1	R11	*H1
C210	F1	C526	D1	IC304	*G1	R12	*H1
C211	*G1	C527	D1	IC305	G1	R13	G5
C212	G1	C528	*B1	IC306	*H1	R14	*G5
C213	*G1	C529	D1	IC401	*E1	R15	*G5
C214	*G1	C530	*D1	IC402	*E1	R16	H5
C215	G1	C531	*D1	IC403	*E1	R17	*B5
C216	F1	C532	*C1	IC404	*E1	R18	*B5
C217	G1	C533	*C1	IC405	*E1	R19	G5
C218	G1	C534	*C1	IC406	*E1	R20	G5
C219	G1	C535	*D1	IC501	D1	R21	*G5
C220	*F1	C536	*C1	IC502	D1	R22	H5
C221	G1	C537	*B1	IC503	C1	R23	*G5
C222	G1	C538	*B1	IC504	D1	R24	*B5
C223	*G1	C539	C1	IC505	D1	R25	*G5
C224	*G1	C540	*D1	IC506	C1	R26	*B5
C226	*G1	C541	*D1	IC507	D1	R27	*B5
C227	*F1	C542	D1	IC508	*D1	R28	B1
C228	F1	C543	*B1	IC509	C1	R29	B1
C301	G1	C544	*C1	IC510	C1	R30	B1
C302	H1	C546	D1	IC511	*B1	R31	B1
C303	*G1	C547	*C1	IC512	B1	R32	B1
C304	G1	C548	*D1	IC513	A1	R33	*C5
C305	H1	C549	D1	IC514	B1	R34	*C5
C306	*H1	C550	*D1	IC515	A1	R35	*C5
C311	*G1	C551	*B1	IC516	C1	R36	*B1
C312	G1	C555	*C1	IC520	*B1	R37	*B1
C313	*H1	C556	*C1	IC521	C1	R38	*A1
C314	*H1	C557	*C1	IC522	C1	R39	*A1
C315	H1	C558	*C1	IC523	*B1	R40	*A1
C316	G1	C559	*D1	IC601	*A1	R41	A1
C317	H1	C560	*C1	IC602	*B1	R42	*B1
C318	H1	C561	*C1	IC701	*F1	R101	*F1
C319	G1	C562	*C1	IC702	*D1	R102	*F1
C320	*G1	C563	*C1	IC703	*C1	R103	*F1
C321	G1	C564	*C1	IC801	*B1	R104	F1
C322	H1	C600	*C1	IC802	A1	R105	F1
C323	*H1	C601	*D1	IC803	*B1	R106	F1
C324	*H1	C602	*C1	IC804	B1	R107	*F1
C326	G1	C701	*E1			R111	*F1
C327	*G1	C702	*E1	L101	*F1	R112	F1
C328	G1	C703	*F1	L102	*F1	R113	F1
C401	F1						

R114	*F1	R326	*H1	R545	*D1	R811	A1
R115	*F1	R328	*H1	R546	*C1	R812	B1
R116	F1	R329	G1	R547	C1	R813	A1
R117	*F1	R330	*G1	R548	*D1	R814	A1
R118	*F1	R331	*G1	R549	*D1	R815	*B1
R119	*F1	R332	*H1	R550	*C1	R816	*B1
R120	*F1	R333	H1	R551	*C1	R817	*A1
R121	*F1	R335	*G1	R552	*C1	R818	*A1
R122	*F1	R336	G1	R553	*D1	R819	B1
R123	*F1	R337	*G1	R554	*D1		
R124	*F1	R338	G1	R555	*D1	RV1	C1
R125	*F1	R339	*H1	R556	*D1	RV102	F1
R126	*F1	R350	G1	R557	*B1	RV103	F1
R128	*F1	R351	H1	R558	*D1	RV201	G1
R129	F1	R352	H1	R559	*C1	RV202	G1
R130	*F1	R353	H1	R560	B1	RV302	H1
R131	*F1	R401	*E1	R561	*D1	RV303	G1
R132	*F1	R402	*E1	R562	*C1	RV501	B1
R133	F1	R403	*E1	R563	C1	RV502	B1
R135	*F1	R404	*E1	R564	*D1	RV504	C1
R136	F1	R405	*E1	R565	*D1	RV701	F1
R137	*F1	R406	*E1	R566	*D1	RV702	D1
R138	F1	R407	*E1	R567	D1		
R139	*F1	R408	*E1	R568	*C1	TP1	F1
R150	*F1	R409	*E1	R569	*C1	TP2	F1
R151	F1	R410	*E1	R570	*C1		
R152	F1	R411	*E1	R571	*C1	*:B SIDE	
R153	F1	R412	*E1	R572	*D1		
R201	*G1	R413	*E1	R573	*D1		
R202	*G1	R414	E1	R574	*C1		
R203	G1	R415	*E1	R575	*C1		
R204	G1	R416	E1	R576	*B1		
R205	G1	R417	*E1	R577	*B1		
R206	G1	R418	E1	R578	*C1		
R207	F1	R419	*E1	R579	*D1		
R208	G1	R420	*E1	R580	*D1		
R209	G1	R421	*E1	R581	*C1		
R210	F1	R422	*E1	R582	*C1		
R211	G1	R423	*E1	R583	*C1		
R212	*G1	R424	*E1	R584	*C1		
R213	G1	R425	*E1	R585	B1		
R214	G1	R426	*E1	R586	*C1		
R215	*G1	R427	*E1	R587	D1		
R216	G1	R428	*E1	R588	*C1		
R217	G1	R429	*E1	R589	*C1		
R218	G1	R430	E1	R590	C1		
R219	*G1	R431	*E1	R591	*B1		
R220	G1	R432	*E1	R592	*A1		
R221	*G1	R433	E1	R593	*C1		
R222	*F1	R434	*E1	R594	*C1		
R223	G1	R435	*E1	R595	*D1		
R224	*G1	R436	E1	R596	*C1		
R225	*G1	R501	*A1	R597	*C1		
R226	*F1	R502	*B1	R598	D1		
R227	*F1	R503	*B1	R599	*C1		
R228	*G1	R504	*B1	R600	*D1		
R229	*G1	R505	*A1	R601	*D1		
R230	*G1	R506	*A1	R602	*D1		
R231	*G1	R507	*A1	R603	*D1		
R232	*G1	R508	*A1	R604	*D1		
R233	*G1	R509	*B1	R605	*C1		
R234	*G1	R510	*B1	R606	*C1		
R236	F1	R511	*B1	R607	*C1		
R240	*F1	R512	*A1	R608	C1		
R241	*F1	R513	*B1	R609	D1		
R242	*G1	R514	*B1	R610	C1		
R243	G1	R515	*A1	R611	C1		
R244	*G1	R516	*B1	R612	*C1		
R245	F1	R517	*A1	R614	*D1		
R246	*G1	R518	*A1	R615	*C1		
R247	G1	R519	*B1	R616	*D1		
R248	*G1	R520	*B1	R617	*D1		
R250	*G1	R521	*A1	R618	C1		
R251	G1	R522	*A1	R619	D1		
R301	*G1	R523	*B1	R620	*D1		
R302	*G1	R524	*B1	R621	*D1		
R303	*H1	R525	*B1	R701	E1		
R304	G1	R526	*B1	R702	F1		
R305	G1	R527	*A1	R703	*F1		
R306	H1	R528	*A1	R704	F1		
R307	*H1	R529	*A1	R705	*F1		
R311	*G1	R530	*A1	R706	C1		
R312	G1	R531	*B1	R707	D1		
R313	H1	R532	*B1	R708	*D1		
R314	*H1	R533	*A1	R709	*C1		
R315	*G1	R534	*A1	R710	*D1		
R316	H1	R535	*A1	R801	*B1		
R317	*H1	R536	*D1	R802	*B1		
R318	*H1	R537	*C1	R803	*B1		
R319	*G1	R538	*D1	R804	B1		
R320	*G1	R539	*B1	R805	B1		
R321	*G1	R540	*D1	R806	B1		
R322	*H1	R541	C1	R807	B1		
R323	*H1	R542	C1	R808	B1		
R324	*H1	R543	C1	R809	A1		
R325	*H1	R544	C1	R810	A1		

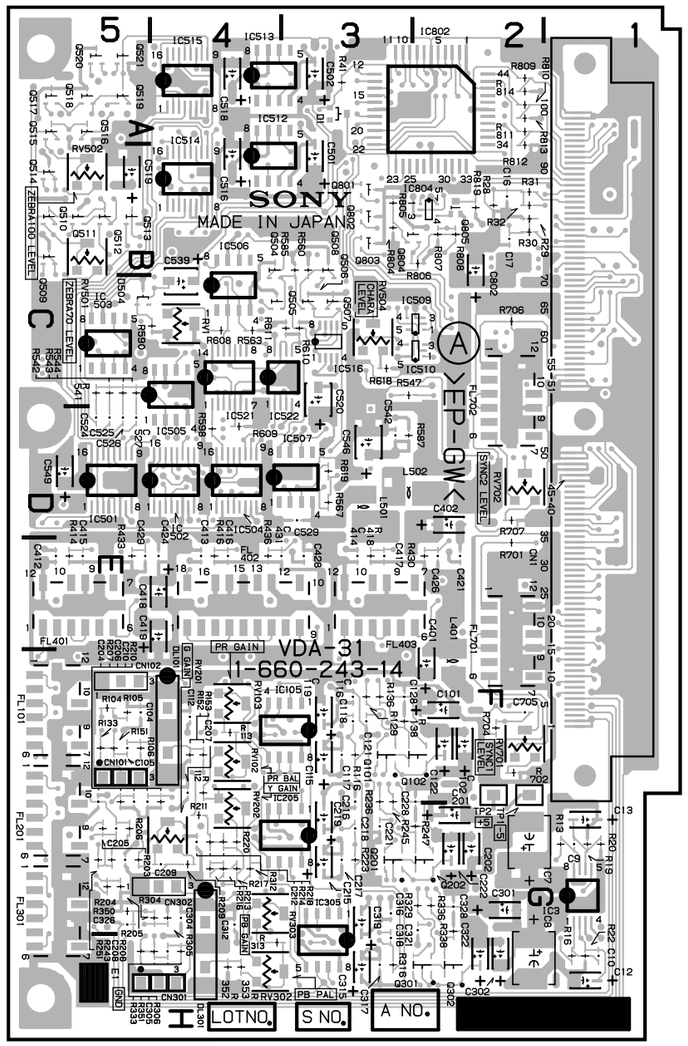

HDC-700 : S/N 10078 and Higher
HDCA-750 : S/N 10096 and Higher

VDA-31 -A SIDE-
1-660-243-14

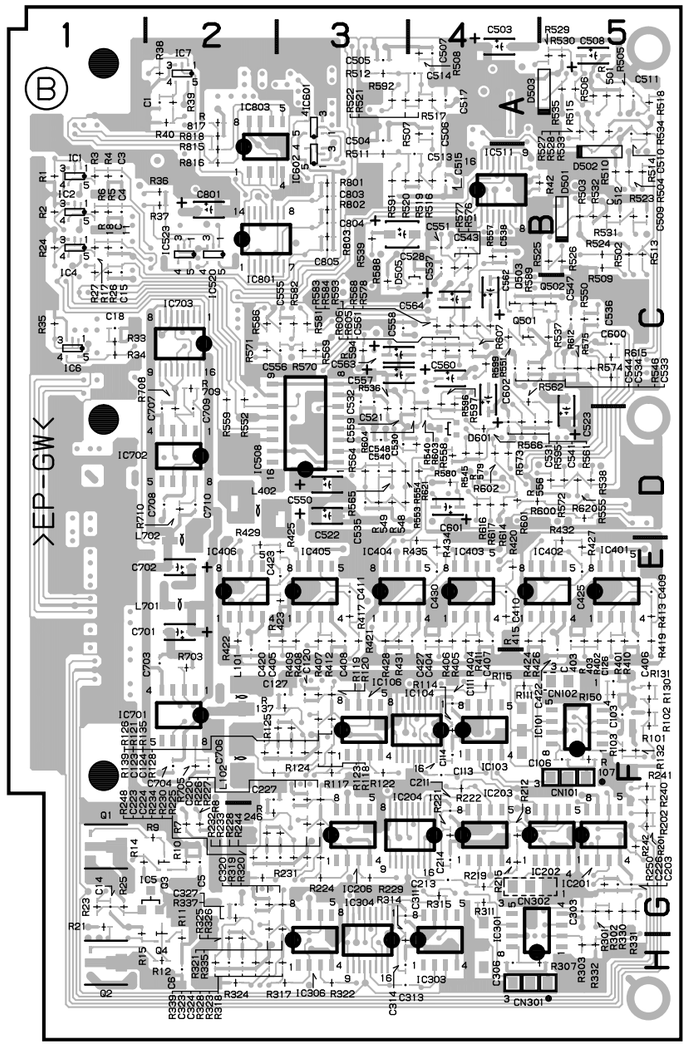

VDA-31 -B SIDE-
1-660-243-14

VDA-31 (1-660-243-13)

CN1	D1	C402	D2	C704	*F2	L402	*D2
CN101	F5	C403	*E5	C705	F2	L501	D3
CN102	F5	C404	*E4	C706	*F2	L502	D3
CN301	H4	C405	*E2	C707	*D2	L701	*E2
CN302	G4	C406	*E5	C708	*D2	L702	*E2
		C407	*E4	C709	*D2		
C1	*A2	C408	*E3	C710	*D2	Q1	*G1
C3	*B1	C409	*E5	C801	*B2	Q2	*H1
C4	*B1	C410	*E4	C802	B2	Q3	*G2
C5	*G2	C411	*E3	C803	*B3	Q4	*G2
C6	*H2	C412	E5	C804	*B3	Q101	F3
C7	G2	C413	E4	C805	*B3	Q102	F2
C8	H2	C414	E3			Q201	G3
C9	G1	C415	E5	DL101	F4	Q202	G2
C10	H1	C416	E4	DL301	H4	Q301	H2
C11	*B1	C417	E3			Q302	H2
C12	H1	C418	E4	D501	*B5	Q501	*C4
C13	G1	C419	E4	D502	*B5	Q502	*C5
C14	*G1	C420	*F2	D503	*A5	Q503	*C4
C15	*B1	C421	E2	D504	C5	Q504	B4
C16	B2	C422	*F5	D505	*C4	Q505	C4
C17	B2	C423	*E3	D601	*D4	Q506	C3
C18	*C1	C424	E4			Q507	C3
C101	F2	C425	*E5	E1	H5	Q508	B3
C102	F2	C426	E2			Q509	B5
C103	*F5	C427	*E4	FL101	F5	Q510	B5
C104	F5	C428	E3	FL201	G5	Q511	B5
C105	F5	C429	E5	FL301	G5	Q512	B5
C106	*F5	C430	*E4	FL401	E5	Q513	B5
C111	*F4	C431	E3	FL402	E4	Q514	B5
C112	F4	C501	B3	FL403	E3	Q515	A5
C113	*F4	C502	A3	FL701	E2	Q516	A5
C114	*F4	C503	*A4	FL702	C2	Q517	A5
C115	F3	C504	*A3			Q518	A5
C116	F3	C505	*A3	IC1	*B1	Q519	A5
C117	F3	C506	*A4	IC2	*B1	Q520	A5
C118	F3	C507	*A4	IC3	G1	Q521	A5
C119	F3	C508	*A5	IC4	*B1	Q801	B3
C120	*F3	C509	*B5	IC5	*G2	Q802	B3
C121	F3	C510	*A5	IC6	*C1	Q803	B3
C122	F2	C511	*A5	IC7	*A2	Q804	B2
C123	*F3	C512	*B5	IC101	*F5	Q805	B2
C124	*F3	C513	*B4	IC103	*F4		
C126	*F5	C514	*A4	IC104	*F4	R1	*B1
C127	*F3	C515	*B4	IC105	F3	R2	*B1
C128	F3	C516	B4	IC106	*F3	R3	*B1
C201	G2	C517	*A4	IC201	*G5	R4	*B1
C202	G2	C518	A4	IC202	*G4	R5	*B1
C203	*G5	C519	B5	IC203	*G4	R6	*B1
C204	F5	C520	C3	IC204	*G4	R7	*G2
C205	G5	C521	*C3	IC205	G3	R8	*G2
C206	F5	C522	*D3	IC206	*G3	R9	*G2
C207	F4	C523	*D5	IC301	*H5	R10	*G2
C208	G5	C524	D5	IC303	*H4	R11	*H2
C209	G4	C525	D5	IC304	*G3	R12	*H2
C210	F5	C526	D5	IC305	G3	R13	G1
C211	*G4	C527	D5	IC306	*H3	R14	*G1
C212	G4	C528	*B3	IC401	*E5	R15	*G1
C213	*G4	C529	D3	IC402	*E4	R16	H1
C214	*G4	C530	*D3	IC403	*E4	R17	*B1
C215	G3	C531	*D4	IC404	*E3	R18	*B1
C216	F3	C532	*C3	IC405	*E3	R19	G1
C217	G3	C533	*C5	IC406	*E2	R20	G1
C218	G3	C534	*C4	IC501	D5	R21	*G1
C219	G3	C535	*D3	IC502	D4	R22	H1
C220	*F3	C536	*C5	IC503	C5	R23	*G1
C221	G3	C537	*B4	IC504	D4	R24	*B1
C222	G2	C538	*B4	IC505	D4	R25	*G1
C223	*G2	C539	C4	IC506	C4	R26	*B1
C224	*G3	C540	*D3	IC507	D4	R27	*B1
C226	*G5	C541	*D4	IC508	*D3	R28	B2
C227	*F2	C542	D3	IC509	C2	R29	B2
C228	F2	C543	*B4	IC510	C2	R30	B2
C301	G2	C544	*C4	IC511	*B4	R31	B2
C302	H2	C546	D3	IC512	B4	R32	B2
C303	*G5	C547	*C5	IC513	A4	R33	*C1
C304	G4	C548	*D3	IC514	B4	R34	*C1
C305	H4	C549	D5	IC515	A4	R35	*C1
C306	*H4	C550	*D3	IC516	C3	R36	*B2
C311	*G3	C551	*B4	IC520	*B2	R37	*B2
C312	G4	C555	*C3	IC521	C4	R38	*A2
C313	*H3	C556	*C3	IC522	C4	R39	*A2
C314	*H3	C557	*C3	IC523	*B2	R40	*A2
C315	H3	C558	*C3	IC601	*A3	R101	*F5
C316	G3	C559	*D3	IC602	*B3	R102	*F5
C317	H3	C560	*C4	IC701	*F2	R103	*F5
C318	H3	C561	*C4	IC702	*D2	R104	F5
C319	G3	C562	*C4	IC703	*C2	R105	F5
C320	*G2	C563	*C3	IC801	*B2	R106	F5
C321	G2	C564	*C4	IC802	A2	R107	*F5
C322	H2	C600	*C5	IC803	*B2	R111	*F4
C323	*H2	C601	*D4	IC804	B2	R112	F4
C324	*H2	C602	*C4			R113	F4
C326	G5	C701	*E2	L101	*F2	R114	*F4
C327	*G2	C702	*E2	L102	*F2	R115	*F4
C328	G2	C703	*F2	L401	F2	R116	F3
C401	F2						

R117	*F3	R330	*G5	R548	*D3	R814	A2
R118	*F3	R331	*G5	R549	*D3	R815	*B2
R119	*F3	R332	*H5	R550	*C5	R816	*B2
R120	*F3	R333	H5	R551	*C4	R817	*A2
R121	*F3	R335	*G3	R552	*C2	R818	*A2
R122	*F3	R336	G2	R553	*D3	R819	B2
R123	*F3	R337	*G2	R554	*D3		
R124	*F2	R338	G2	R555	*D5	RV1	C4
R125	*F3	R339	*H2	R556	*D5	RV102	F4
R126	*F3	R350	G5	R557	*B4	RV103	F4
R128	*F3	R351	H4	R558	*D4	RV201	G4
R129	F3	R352	H4	R559	*C2	RV202	G4
R130	*F5	R353	H4	R560	B3	RV302	H4
R131	*F5	R401	*E5	R561	*D5	RV303	G4
R132	*F5	R402	*E5	R562	*C4	RV501	B5
R133	F5	R403	*E5	R563	C4	RV502	B5
R135	*F3	R404	*E4	R564	*D3	RV504	C3
R136	F3	R405	*E4	R565	*D3	RV701	F2
R137	*F3	R406	*E4	R566	*D4	RV702	D2
R138	F3	R407	*E3	R567	D3		
R139	*F2	R408	*E3	R568	*C4	TP1	F2
R150	*F5	R409	*E3	R569	*C3	TP2	F2
R151	F5	R410	*E5	R570	*C3		
R152	F4	R411	*E4	R571	*C2	*:B SIDE	
R153	F4	R412	*E3	R572	*D5		
R201	*G5	R413	*E5	R573	*D4		
R202	*G5	R414	E5	R574	*C5		
R203	G5	R415	*E4	R575	*C5		
R204	G5	R416	E4	R576	*B4		
R205	G5	R417	*E3	R577	*B4		
R206	G5	R418	E3	R578	*C4		
R207	F5	R419	*E5	R579	*D4		
R208	G5	R420	*E4	R580	*D4		
R209	G4	R421	*E3	R581	*C3		
R210	F4	R422	*E2	R582	*C3		
R211	G4	R423	*E3	R583	*C4		
R212	*G4	R424	*E4	R584	*C4		
R213	G4	R425	*E3	R585	B3		
R214	G4	R426	*E5	R586	*C2		
R215	*G4	R427	*E5	R587	D3		
R216	G4	R428	*E3	R588	*C3		
R217	G4	R429	*E2	R589	*C4		
R218	G4	R430	E2	R590	C4		
R219	*G4	R431	*E3	R591	*B3		
R220	G4	R432	*E5	R592	*A3		
R221	*G4	R433	E5	R593	*C4		
R222	*F4	R434	*E4	R594	*C3		
R223	G3	R435	*E4	R595	*D4		
R224	*G3	R436	E4	R596	*C4		
R225	*G3	R501	*A5	R597	*C4		
R226	*F3	R502	*B5	R598	D4		
R227	*F3	R503	*B5	R599	*C4		
R228	*G3	R504	*B5	R600	*D4		
R229	*G3	R505	*A5	R601	*D4		
R230	*G3	R506	*A5	R602	*D4		
R231	*G2	R507	*A4	R603	*D4		
R232	*G2	R508	*A4	R604	*D4		
R233	*G3	R509	*B5	R605	*C4		
R234	*G3	R510	*B5	R606	*C4		
R236	F3	R511	*B3	R607	*C4		
R240	*F5	R512	*A3	R608	C4		
R241	*F5	R513	*B5	R609	D4		
R242	*G5	R514	*B5	R610	C3		
R243	G5	R515	*A5	R611	C3		
R244	*G3	R516	*B4	R612	*C5		
R245	F3	R517	*A4	R614	*D4		
R246	*G2	R518	*A5	R615	*C5		
R247	G2	R519	*B4	R616	*D4		
R248	*G2	R520	*B3	R617	*D4		
R250	*G5	R521	*A4	R618	C3		
R251	G5	R522	*A3	R619	D3		
R301	*G5	R523	*B5	R620	*D5		
R302	*G5	R524	*B5	R621	*D4		
R303	*H5	R525	*B5	R701	E2		
R304	G4	R526	*B5	R702	F2		
R305	G4	R527	*A5	R703	*F2		
R306	H4	R528	*A5	R704	F2		
R307	*H5	R529	*A5	R705	*F2		
R311	*G4	R530	*A5	R706	C2		
R312	G4	R531	*B5	R707	D2		
R313	H4	R532	*B5	R708	*D2		
R314	*H3	R533	*A5	R709	*C2		
R315	*G4	R534	*A5	R710	*D2		
R316	H3	R535	*A5	R801	*B3		
R317	*H3	R536	*D3	R802	*B3		
R318	*H3	R537	*C5	R803	*B3		
R319	*G2	R538	*D5	R804	B3		
R320	*G3	R539	*B3	R805	B3		
R321	*G2	R540	*D4	R806	B2		
R322	*H3	R541	C5	R807	B2		
R323	*H2	R542	C5	R808	B2		
R324	*H2	R543	C5	R809	A2		
R325	*H2	R544	C5	R810	A2		
R326	*H2	R545	*D4	R811	A2		
R328	*H2	R546	*C5	R812	B2		
R329	G2	R547	C3	R813	A2		

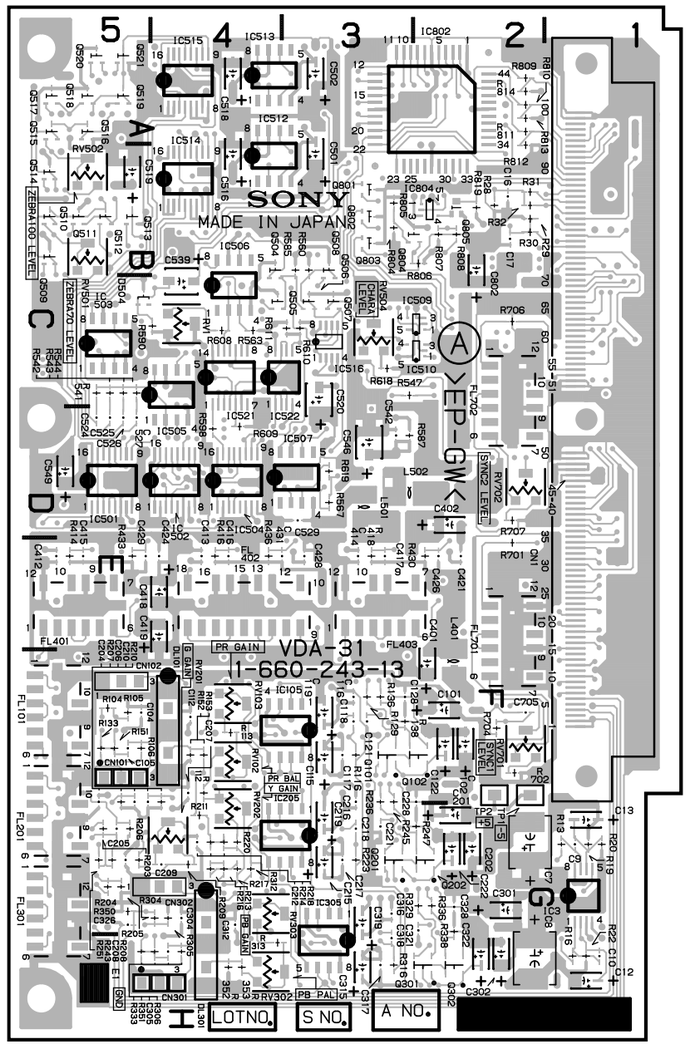

HDC-700 : S/N 10053 through 10077

VDA-31 -A SIDE-
1-660-243-13

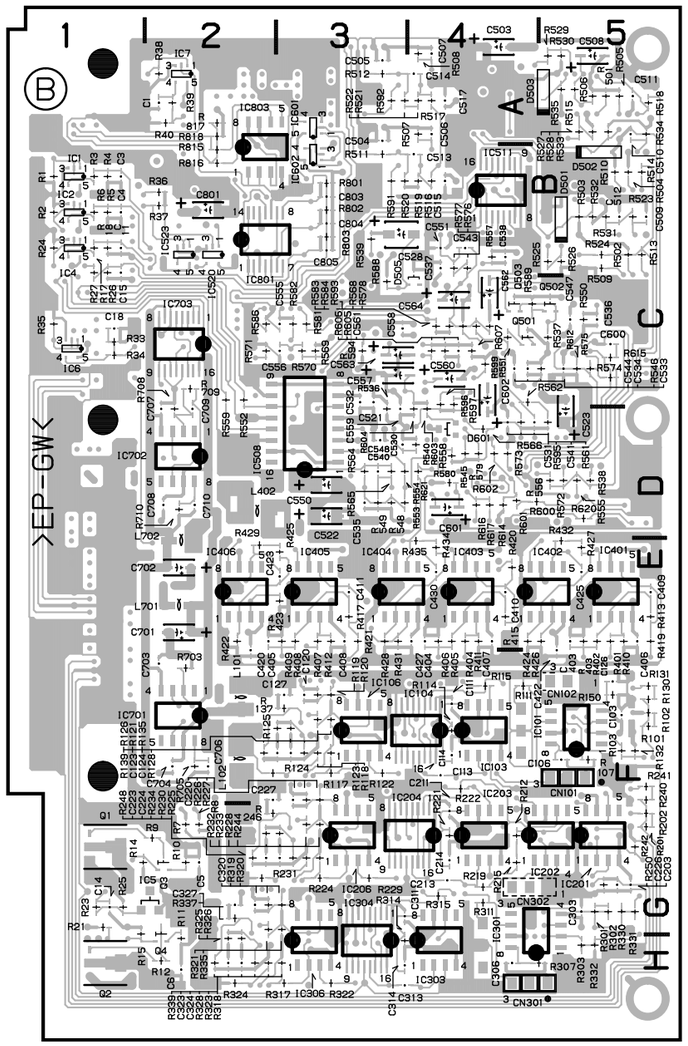

VDA-31 -B SIDE-
1-660-243-13

VDA-31 (1-660-243-12)

CN1	D1	C404	*E4	DL101	F4	Q301	H2
CN101	F5	C405	*E2	DL301	H4	Q302	H2
CN102	F5	C406	*E5			Q501	*C4
CN301	H4	C407	*E4	D501	*B5	Q502	*C5
CN302	G4	C408	*E3	D502	*B5	Q503	*C4
		C412	E5	D503	*A5	Q504	B4
C1	*A2	C413	E4	D504	C4	Q505	C4
C3	*B1	C414	E3	D505	*C4	Q506	C3
C4	*B1	C415	E5	D601	*D4	Q507	C3
C5	*G2	C416	E4			Q508	B3
C6	*H2	C417	E3	E1	H5	Q509	B5
C7	G2	C418	E4			Q510	B5
C8	H2	C419	E4	FL101	F5	Q511	B5
C9	G1	C420	*F2	FL201	G5	Q512	B5
C10	H1	C421	E2	FL301	G5	Q513	B5
C11	*B1	C422	*F5	FL401	E5	Q514	B5
C12	H1	C424	E4	FL402	E4	Q515	A5
C13	G1	C426	E2	FL403	E3	Q516	A5
C14	*G1	C427	*E4	FL701	E2	Q517	A5
C15	*B1	C428	E3	FL702	C2	Q518	A5
C16	B2	C429	E5			Q519	A5
C17	B2	C431	E3	IC1	*B1	Q520	A5
C18	*C1	C501	B3	IC2	*B1	Q521	A5
C101	F2	C502	A3	IC3	G1	Q801	B3
C102	F2	C503	*A4	IC4	*B1	Q802	B3
C103	*F5	C504	*A3	IC5	*G2	Q803	B3
C104	F5	C505	*A3	IC6	*C1	Q804	B2
C105	F5	C506	*A4	IC7	*A2	Q805	B2
C106	*F5	C507	*A4	IC101	*F5		
C111	*F4	C508	*A5	IC103	*F4	RV102	F4
C112	F4	C509	*B5	IC104	*F4	RV103	F4
C113	*F4	C510	*A5	IC105	F3	RV201	G4
C114	*F4	C511	*A5	IC106	*F3	RV202	G4
C115	F3	C512	*B5	IC201	*G5	RV302	H4
C116	F3	C515	*B4	IC202	*G4	RV303	G4
C117	F3	C516	B4	IC203	*G4	RV501	B5
C118	F3	C517	*A4	IC204	*G4	RV502	B5
C119	F3	C518	A4	IC205	G3	RV504	C3
C120	*F3	C519	B5	IC206	*G3	RV701	F2
C121	F3	C520	C3	IC301	*H5	RV702	D2
C122	F2	C521	*C3	IC303	*H4		
C124	*F3	C522	*D3	IC304	*G3	R1	*B1
C126	*F5	C523	*D5	IC305	G3	R2	*B1
C127	*F3	C524	D5	IC306	*H3	R3	*B1
C128	F3	C525	D5	IC401	*E5	R4	*B1
C201	G2	C526	D5	IC402	*E4	R5	*B1
C202	G2	C527	D5	IC403	*E4	R6	*B1
C203	*G5	C528	*B3	IC404	*E3	R7	*G2
C204	F5	C529	D3	IC405	*E3	R8	*G2
C205	G5	C530	*D3	IC406	*E2	R9	*G2
C206	F5	C531	*D4	IC501	D5	R10	*G2
C207	F4	C532	*C3	IC502	D4	R11	*H2
C208	G5	C533	*C5	IC503	C5	R12	*H2
C209	G4	C534	*C4	IC504	D4	R13	G1
C210	F5	C535	*D3	IC505	D4	R14	*G1
C211	*G4	C536	*C5	IC506	C4	R15	*G1
C212	G4	C537	*B4	IC507	D4	R16	H1
C213	*G4	C538	*B4	IC508	*D3	R17	*B1
C214	*G4	C539	C4	IC509	C2	R18	*B1
C215	G3	C542	D3	IC510	C2	R19	G1
C216	F3	C544	*C4	IC511	*B4	R20	G1
C217	G3	C546	D3	IC512	B4	R21	*G1
C218	G3	C547	*C5	IC513	A4	R22	H1
C219	G3	C548	*D3	IC514	B4	R23	*G1
C220	*F3	C549	D5	IC515	A4	R24	*B1
C221	G3	C550	*D3	IC516	C3	R25	*G1
C222	G2	C551	*B4	IC520	*B2	R26	*B1
C224	*G3	C555	*C3	IC521	C4	R27	*B1
C226	*G5	C556	*C3	IC522	C4	R28	B2
C227	*F2	C557	*C3	IC523	*B2	R29	B2
C228	F2	C558	*C3	IC601	*A3	R30	B2
C301	G2	C559	*D3	IC602	*B3	R31	B2
C302	H2	C560	*C4	IC701	*F2	R33	*C1
C303	*G5	C561	*C4	IC702	*D2	R34	*C1
C304	G4	C562	*C4	IC703	*C2	R35	*C1
C305	H4	C563	*C3	IC801	*B2	R36	*B2
C306	*H4	C564	*C4	IC802	A2	R38	*A2
C311	*G3	C600	*C5	IC803	*B2	R39	*A2
C312	G4	C601	*D4	IC804	B2	R40	*A2
C313	*H3	C602	*C4	L101	*F2	R101	*F5
C314	*H3	C701	*E2	L102	*F2	R102	*F5
C315	H3	C702	*E2	L401	F2	R103	*F5
C316	G3	C703	*F2	L402	*D2	R104	F5
C317	H3	C704	*F2	L501	D3	R105	F5
C318	H3	C705	F2	L502	D3	R106	F5
C319	G3	C706	*F2	L701	*E2	R107	*F5
C320	*G2	C707	*D2	L702	*E2	R111	*F4
C321	G2	C708	*D2			R112	F4
C322	H2	C709	*D2	Q1	*G1	R113	F4
C324	*H2	C710	*D2	Q2	*H1	R114	*F4
C326	G5	C801	*B2	Q3	*G2	R115	*F4
C327	*G2	C802	B2	Q4	*G2	R116	F3
C328	G2	C803	*B3	Q101	F3	R117	*F3
C401	F2	C804	*B3	Q102	F2	R118	*F3
C402	D2	C805	*B3	Q201	G3	R119	*F3
C403	*E5			Q202	G2	R120	*F3

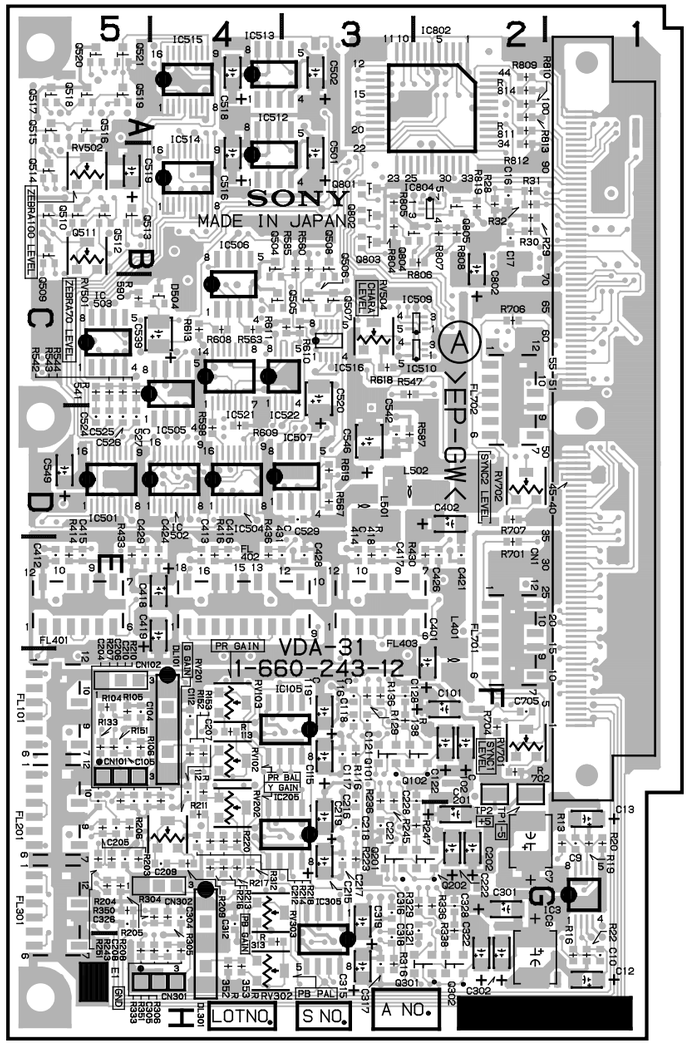

HDC-700 : S/N 10013 through 10052
HDCA-750 : S/N 10041 through 10095

VDA-31 -A SIDE-
1-660-243-12

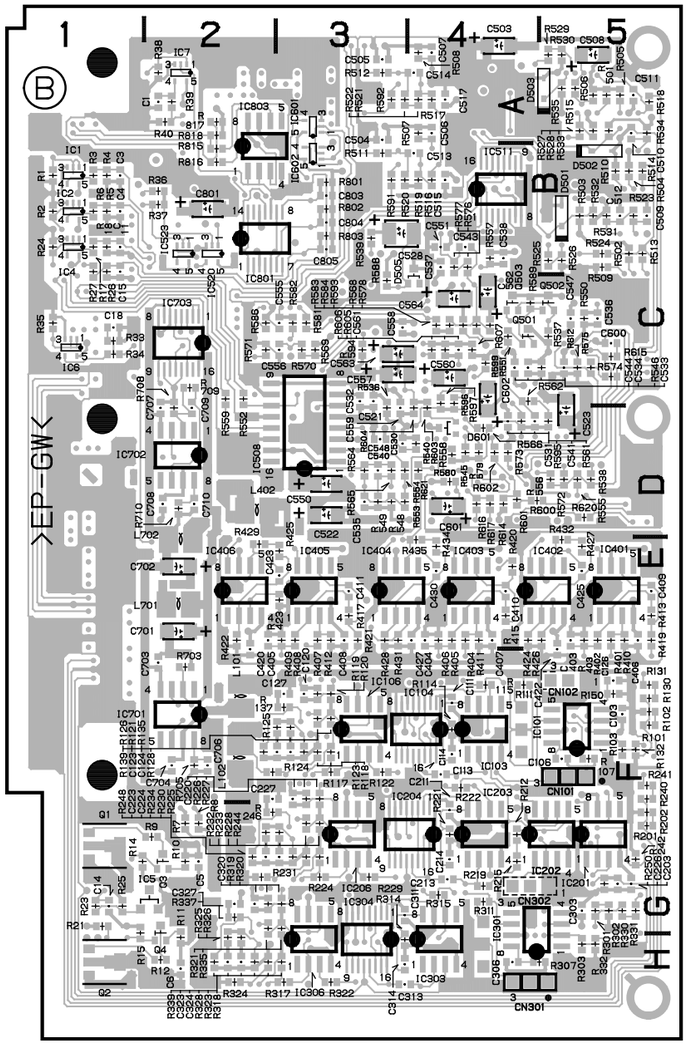

VDA-31 -B SIDE-
1-660-243-12

R121	*F3	R338	G2	R555	*D5		
R122	*F3	R339	*H2	R556	*D5		
R123	*F3	R350	G5	R557	*B4		
R124	*F2	R351	H4	R558	*D4		
R126	*F3	R352	H4	R559	*C2		
R128	*F3	R353	H4	R560	B3		
R129	F3	R401	*E5	R561	*D5		
R130	*F5	R402	*E5	R562	*C4		
R131	*F5	R403	*E5	R563	C4		
R132	*F5	R404	*E4	R564	*D3		
R133	F5	R405	*E4	R565	*D3		
R135	*F3	R406	*E4	R568	*C4		
R136	F3	R407	*E3	R569	*C3		
R137	*F3	R408	*E3	R570	*C3		
R138	F3	R409	*E3	R571	*C2		
R139	*F2	R410	*E5	R572	*D5		
R150	*F5	R411	*E4	R573	*D4		
R151	F5	R412	*E3	R574	*C5		
R152	F4	R413	*E5	R575	*C5		
R153	F4	R414	E5	R576	*B4		
R201	*G5	R415	*E4	R577	*B4		
R202	*G5	R416	E4	R578	*C4		
R203	G5	R417	*E3	R579	*D4		
R204	G5	R418	E3	R580	*D4		
R205	G5	R419	*E5	R581	*C3		
R206	G5	R420	*E4	R582	*C3		
R207	F5	R421	*E3	R583	*C4		
R208	G5	R422	*E2	R584	*C4		
R209	G4	R423	*E3	R585	B3		
R210	F4	R424	*E4	R586	*C2		
R211	G4	R425	*E3	R587	D3		
R212	*G4	R426	*E5	R588	*C3		
R213	G4	R427	*E5	R589	*C4		
R214	G4	R428	*E3	R590	C5		
R215	*G4	R429	*E2	R591	*B3		
R216	G4	R430	E2	R592	*A3		
R217	G4	R431	*E3	R593	*C4		
R218	G4	R432	*E5	R594	*C3		
R219	*G4	R433	E5	R595	*D4		
R220	G4	R434	*E4	R596	*C4		
R221	*G4	R435	*E4	R597	*C4		
R222	*F4	R436	E4	R598	D4		
R223	G3	R501	*A5	R599	*C4		
R224	*G3	R502	*B5	R600	*D4		
R225	*G3	R503	*B5	R601	*D4		
R226	*F3	R504	*B5	R602	*D4		
R227	*F3	R505	*A5	R603	*D4		
R228	*G3	R506	*A5	R604	*D4		
R229	*G3	R507	*A4	R605	*C4		
R230	*G3	R508	*A4	R606	*C4		
R231	*G2	R509	*B5	R607	*C4		
R233	*G3	R510	*B5	R608	C4		
R234	*G3	R511	*B3	R609	D4		
R236	F3	R512	*A3	R610	C3		
R240	*F5	R513	*B5	R611	C3		
R241	*F5	R514	*B5	R612	*C5		
R242	*G5	R515	*A5	R613	C4		
R243	G5	R516	*B4	R614	*D4		
R244	*G3	R517	*A4	R615	*C5		
R245	F3	R518	*A5	R616	*D4		
R246	*G2	R519	*B4	R617	*D4		
R247	G2	R520	*B3	R618	C3		
R248	*G2	R521	*A4	R620	*D5		
R250	*G5	R522	*A3	R621	*D4		
R251	G5	R523	*B5	R701	E2		
R301	*G5	R524	*B5	R702	F2		
R302	*G5	R525	*B5	R703	*F2		
R303	*H5	R526	*B5	R704	F2		
R304	G4	R527	*A5	R705	*F2		
R305	G4	R528	*A5	R706	C2		
R306	H4	R529	*A5	R707	D2		
R307	*H5	R530	*A5	R708	*D2		
R311	*G4	R531	*B5	R709	*C2		
R312	G4	R532	*B5	R710	*D2		
R313	H4	R533	*A5	R801	*B3		
R314	*H3	R534	*A5	R802	*B3		
R315	*G4	R535	*A5	R803	*B3		
R316	H3	R536	*D3	R804	B3		
R317	*H3	R537	*C5	R805	B3		
R318	*H3	R538	*D5	R806	B2		
R319	*G2	R539	*B3	R807	B2		
R320	*G3	R540	*D4	R808	B2		
R321	*G2	R541	C5	R809	A2		
R322	*H3	R542	C5	R810	A2		
R323	*H2	R543	C5	R811	A2		
R324	*H2	R544	C5	R812	B2		
R326	*H2	R545	*D4	R813	A2		
R328	*H2	R546	*C5	R814	A2		
R329	G2	R547	C3	R815	*B2		
R330	*G5	R548	*D3	R816	*B2		
R331	*G5	R549	*D3	R817	*A2		
R332	*H5	R550	*C5	R818	*A2		
R333	H5	R551	*C4	R819	B2		
R335	*G3	R552	*C2				
R336	G2	R553	*D3	TP1	F2		
R337	*G2	R554	*D3	TP2	F2		

*:B SIDE

VDA-31 (1-660-243-11)

CN1	D1	C401	F2	D501	*B5		
		C402	D2	D502	*B5		
C3	*B1	C403	*E5	D503	*A5		
C4	*B1	C404	*E4	D504	C4		
C5	*G2	C405	*E2	D505	*B4		
C6	*H2	C406	*E5				
C7	G2	C407	*E4	E1	H5		
C8	H2	C408	*E3				
C9	G1	C412	E5	FL101	F5		
C10	H1	C413	E4	FL201	G5		
C11	*B1	C414	E3	FL301	G5		
C12	H1	C415	E5	FL401	E5		
C13	G1	C416	E4	FL402	E4		
C14	*G1	C417	E3	FL403	E3		
C15	*B1	C418	E4	FL701	E2		
C16	B2	C419	E4	FL702	C2		
C17	B2	C420	*E2				
C18	*C1	C421	E2	IC1	*B1		
C101	F2	C422	*E5	IC2	*B1		
C102	F2	C424	E4	IC3	G1		
C103	*F5	C426	E2	IC4	*B1		
C104	F5	C427	*E4	IC5	*G2		
C105	F5	C428	E3	IC6	*C1		
C106	F5	C429	E5	IC101	*F5		
C107	F4	C431	E3	IC102	*F4		
C108	F5	C501	B3	IC103	*F4		
C109	F4	C502	A3	IC104	*F4		
C110	F5	C503	*A4	IC105	F3		
C111	*F4	C504	*A3	IC106	*F3		
C112	*F4	C505	*A3	IC201	*G5		
C113	*F4	C506	*A4	IC202	*G4		
C114	*F4	C507	*A4	IC203	*G4		
C115	F3	C508	*A5	IC204	*G4		
C116	F3	C509	*B5	IC205	G3		
C117	F3	C510	*A5	IC206	*G3		
C118	F3	C511	*A5	IC301	*H5		
C119	F3	C512	*B5	IC302	*H4		
C120	*F3	C515	*B4	IC303	*H4		
C121	F3	C516	B4	IC304	*G3		
C122	F2	C517	*A4	IC305	G3		
C124	*F3	C518	A4	IC306	*H3		
C126	*F5	C519	B5	IC401	*E5		
C127	*F3	C520	C3	IC402	*E4		
C128	F3	C521	*C3	IC403	*E4		
C201	G2	C522	*D3	IC404	*E3		
C202	G2	C523	*D5	IC405	*E3		
C203	*G5	C524	D5	IC406	*E2		
C204	F5	C525	D5	IC501	D5		
C205	G5	C526	D5	IC502	D4		
C206	F5	C527	D5	IC503	C5		
C207	F4	C528	*B3	IC504	D4		
C208	G5	C529	D3	IC505	D4		
C209	G4	C530	*D3	IC506	C4		
C210	F5	C531	*D4	IC507	D3		
C211	*G4	C532	*C3	IC508	*D3		
C212	G4	C533	*C5	IC509	C2		
C213	*G4	C534	*C4	IC510	C2		
C214	*G4	C535	*D3	IC511	*B4		
C215	G3	C536	*C5	IC512	B4		
C216	F3	C537	*B4	IC513	A4		
C217	G3	C538	*B4	IC514	B4		
C218	G3	C539	C4	IC515	A4		
C219	G3	C542	D3	IC516	C3		
C220	*F3	C544	*C4	IC520	*B2		
C221	G3	C546	D3	IC521	C4		
C222	G2	C547	*C5	IC522	C4		
C224	*G3	C548	*D3	IC523	*B2		
C226	*G5	C549	D5	IC701	*F2		
C227	*F2	C550	*D3	IC702	*D2		
C228	F2	C551	*B4	IC703	*C2		
C301	G2	C555	*C3	IC801	*B2		
C302	H2	C556	*C3	IC802	A2		
C303	*H5	C557	*C3	IC803	*B2		
C304	G5	C558	*C3	IC804	B2		
C305	G4	C559	*C3				
C306	G4	C560	*C4	L101	*F2		
C307	G4	C561	*C4	L102	*F2		
C308	H4	C562	*C4	L401	F2		
C309	G4	C563	*C3	L402	*D2		
C310	G4	C564	*C4	L501	D3		
C311	*G3	C701	*E2	L502	D3		
C312	*H4	C702	*E2	L701	*E2		
C313	*H3	C703	*F2	L702	*D2		
C314	*H3	C704	*F2				
C315	H3	C705	F2	Q1	*G1		
C316	G3	C706	*F2	Q2	*H1		
C317	H3	C707	*C2	Q3	*G2		
C318	H3	C708	*D2	Q4	*G2		
C319	G3	C709	*C2	Q101	F3		
C320	*G2	C710	*D2	Q102	F2		
C321	G2	C801	*B2	Q201	G3		
C322	H2	C802	B2	Q202	G2		
C324	*H2	C803	*B3	Q301	H2		
C326	H4	C804	*B3	Q302	H2		
C327	*G2	C805	*B3	Q501	*C4		
C328	G2			Q502	*C5		

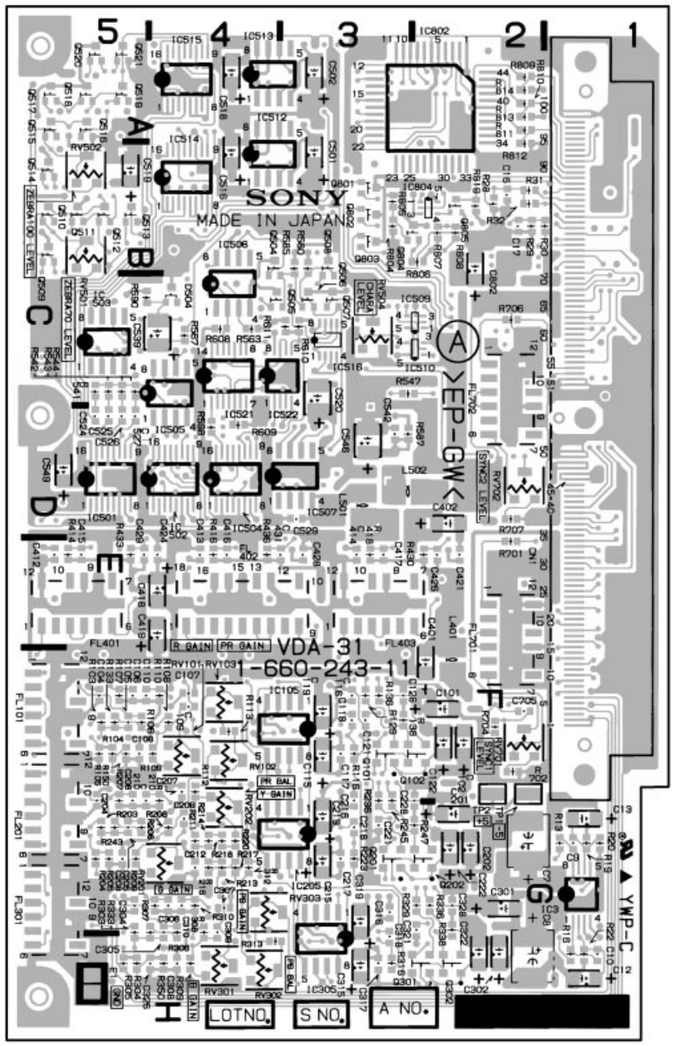

HDC-700 : S/N 10001 through 10012
HDCA-750 : S/N 10001 through 10040

VDA-31 -A SIDE-
1-660-243-11

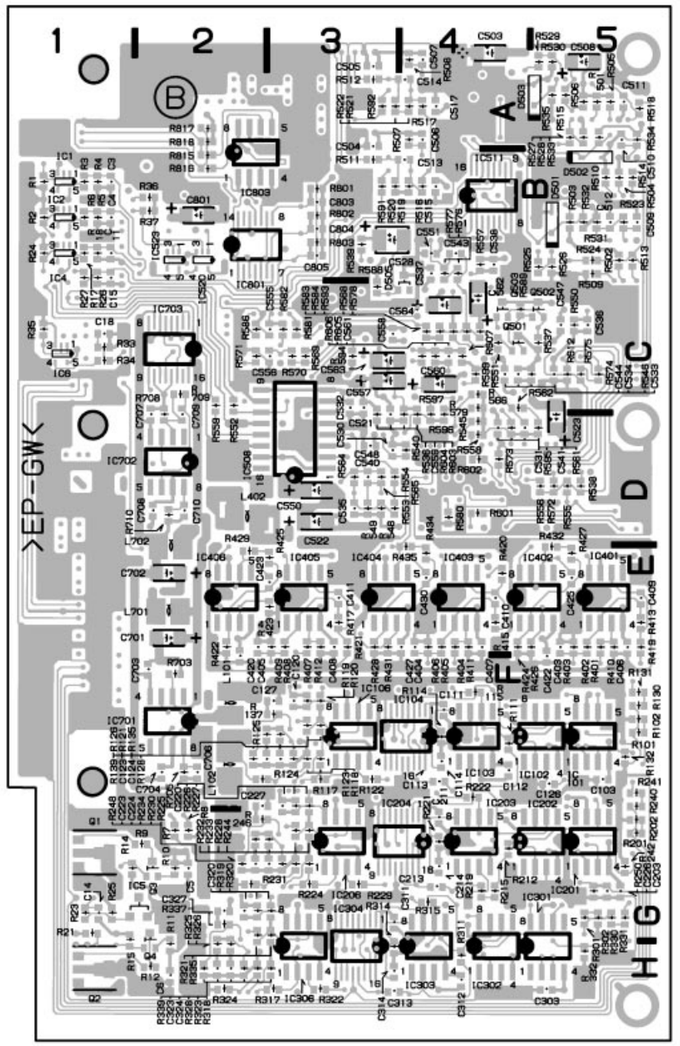

VDA-31 -B SIDE-
1-660-243-11

Q503	*C4	R123	*F3	R401	*E5	R561	*D5
Q504	B4	R124	*F2	R402	*E5	R562	*C4
Q505	C4	R126	*F3	R403	*E5	R563	C4
Q506	C3	R128	*F3	R404	*E4	R564	*D3
Q507	C3	R129	F3	R405	*E4	R565	*D3
Q508	B3	R130	*F5	R406	*E4	R566	*C4
Q509	B5	R131	*F5	R407	*E3	R567	C4
Q510	B5	R132	*F5	R408	*E3	R568	*C4
Q511	B5	R133	F5	R409	*E3	R569	*C3
Q512	B5	R135	*F3	R410	*E5	R570	*C3
Q513	B5	R136	F3	R411	*E4	R571	*C2
Q514	B5	R137	*F3	R412	*E3	R572	*D5
Q515	A5	R138	F3	R413	*E5	R573	*D4
Q516	A5	R139	*F2	R414	E5	R574	*C5
Q517	A5	R150	F5	R415	*E4	R575	*C5
Q518	A5	R201	*G5	R416	E4	R576	*B4
Q519	A5	R202	*G5	R417	*E3	R577	*B4
Q520	A5	R203	G5	R418	E3	R578	*C4
Q521	A5	R204	G5	R419	*E5	R579	*C4
Q801	B3	R205	G5	R420	*E4	R580	*D4
Q802	B3	R206	G5	R421	*E3	R581	*C3
Q803	B3	R207	F5	R422	*E2	R582	*C3
Q804	B2	R208	G4	R423	*E3	R583	*C4
Q805	B2	R209	G5	R424	*E4	R584	*C4
		R210	F4	R425	*E3	R585	B3
RV101	F4	R211	G4	R426	*E5	R586	*C2
RV102	F4	R212	*G4	R427	*E5	R587	D3
RV103	F4	R213	G4	R428	*E3	R588	*C3
RV201	G4	R214	G4	R429	*E2	R589	*C4
RV202	G4	R215	*G4	R430	E2	R590	C5
RV301	H4	R216	G4	R431	*E3	R591	*B3
RV302	H4	R217	G4	R432	*D5	R592	*A3
RV303	G4	R218	G4	R433	E5	R593	*C4
RV501	B5	R219	*G4	R434	*E4	R594	*C3
RV502	B5	R220	G4	R435	*D4	R595	*D4
RV504	C3	R221	*G4	R436	E4	R596	*C4
RV701	F2	R222	*F4	R501	*A5	R597	*C4
RV702	D2	R223	G3	R502	*B5	R598	D4
		R224	*G3	R503	*B5	R599	*C4
R1	*B1	R225	*G3	R504	*B5	R601	*D4
R2	*B1	R226	*F3	R505	*A5	R602	*D4
R3	*B1	R227	*F3	R506	*A5	R603	*C4
R4	*B1	R228	*G3	R507	*A4	R604	*C4
R5	*B1	R229	*G3	R508	*A4	R605	*C4
R6	*B1	R230	*G3	R509	*B5	R606	*C4
R7	*G2	R231	*G2	R510	*B5	R607	*C4
R8	*G2	R233	*G3	R511	*B3	R608	C4
R9	*G2	R234	*G3	R512	*A3	R609	D4
R10	*G2	R236	F3	R513	*B5	R610	C3
R11	*H2	R240	*F5	R514	*B5	R611	C3
R12	*H2	R241	*F5	R515	*A5	R612	*C5
R13	G1	R242	*G5	R516	*B4	R701	E2
R14	*G1	R243	G5	R517	*A4	R702	F2
R15	*G1	R244	*G3	R518	*A5	R703	*F2
R16	H1	R245	F3	R519	*B4	R704	F2
R17	*B1	R246	*G2	R520	*B3	R705	*F2
R18	*B1	R247	G2	R521	*A4	R706	C2
R19	G1	R248	*G2	R522	*A3	R707	D2
R20	G1	R250	*G5	R523	*B5	R708	*C2
R21	*G1	R301	*G5	R524	*B5	R709	*C2
R22	H1	R302	*G5	R525	*B5	R710	*D2
R23	*G1	R303	G5	R526	*B5	R801	*B3
R24	*B1	R304	H5	R527	*A5	R802	*B3
R25	*G1	R305	H5	R528	*A5	R803	*B3
R26	*B1	R306	G4	R529	*A5	R804	B3
R27	*B1	R307	G4	R530	*A5	R805	B3
R28	B2	R308	G4	R531	*B5	R806	B2
R29	B2	R309	H4	R532	*B5	R807	B2
R30	B1	R310	G4	R533	*A5	R808	B2
R31	B2	R311	*H4	R534	*A5	R809	A2
R33	*C1	R312	G4	R535	*A5	R810	A2
R34	*C1	R313	H4	R536	*C3	R811	A2
R35	*C1	R314	*H3	R537	*C5	R812	A2
R36	*B2	R315	*G4	R538	*D5	R813	A2
R101	*F5	R316	H3	R539	*B3	R814	A2
R102	*F5	R317	*H3	R540	*D4	R815	*B2
R103	F5	R318	*H3	R541	C5	R816	*B2
R104	F5	R319	*G2	R542	C5	R817	*A2
R105	F5	R320	*G3	R543	C5	R818	*A2
R106	F5	R321	*G2	R544	C5	R819	B2
R107	F5	R322	*H3	R545	*D4		
R108	F4	R323	*H2	R546	*C5	TP1	F2
R109	F4	R324	*H2	R547	C3	TP2	F2
R110	F4	R326	*H2	R548	*D3		
R111	*F4	R328	*H2	R549	*D3	*:B SIDE	
R112	F4	R329	G2	R550	*C5		
R113	F4	R330	*G5	R551	*C4		
R114	*F4	R331	*G5	R552	*C2		
R115	*F4	R332	*H5	R553	*D3		
R116	F3	R333	G4	R554	*D3		
R117	*F3	R335	*G3	R555	*D5		
R118	*F3	R336	G2	R556	*D5		
R119	*F3	R337	*G2	R557	*B4		
R120	*F3	R338	G2	R558	*D4		
R121	*F3	R339	*H2	R559	*C2		
R122	*F3	R350	H4	R560	B3		

DAD-19 (1-660-252-14)

CN1	*C4	C94	D2	C190	*C5	IC55	D2
CN2	B3	C95	*C1	C191	*D4	IC56	*D2
		C96	*C2	C192	D3	IC57	D1
C1	D4	C97	D3	C194	*D5	IC58	*D1
C2	*A2	C98	*C2	C195	C4	IC59	*D2
C3	*A2	C99	*D3	C196	*C1	IC60	*D2
C4	*D5	C100	*B2	C197	*C5	IC61	C2
C5	*D3	C101	*A2	C198	C5		
C6	D4	C102	C1	C199	D5	L1	*A2
C7	*A4	C103	*B4	C200	*C1	L2	*A2
C8	*A2	C104	*B2	C201	*D4	L3	*D5
C9	*A2	C105	*B2	C202	C4	L4	*D4
C10	*A2	C106	*B2	C203	*C1	L5	*A1
C11	A2	C107	B2	C204	*C5	L6	*A1
C12	A2	C108	B2	C205	D4	L7	*D4
C13	D3	C109	D3	C206	*C4	L8	*D3
C14	*D3	C110	*C4	C207	D1	L9	*B2
C15	D4	C111	*B4	C208	D1	L10	*B2
C16	*A4	C112	*A3	C209	*C4	L11	*D4
C17	*D4	C113	B2	C210	*D3	L12	*D4
C18	*D4	C114	B1	C211	*B2	L13	*B2
C19	*A3	C115	B1	C212	*B4	L14	*B2
C20	B1	C116	*C1	C213	*B3	L15	*C5
C21	*A4	C117	*B4	C214	A2	L16	D4
C22	*D2	C118	*A4	C215	*B4		
C23	*A4	C119	*B4	C216	*A5	Q1	C4
C24	*A2	C120	*B2	C217	*C3	Q2	C4
C25	D2	C121	*B4	C218	*C3	Q3	A2
C26	*D5	C122	*B3			Q5	*B4
C27	*D4	C123	*B3	D1	*B3	Q6	*C4
C28	*D4	C124	A2			Q7	*B4
C29	A2	C125	A2	DL1	D5	Q8	*B4
C30	A3	C126	*C4	DL2	D5	Q10	A5
C31	*A2	C127	*D4			Q11	B5
C32	*A2	C128	*D4	E1	D1	Q12	B5
C33	*A2	C129	*D4	E2	D5	Q13	B5
C34	*A3	C130	*A2			Q15	B2
C35	A2	C131	*A2	FL1	A3	Q17	*D5
C36	*B3	C132	*C3	FL2	A4	Q18	*D5
C37	D4	C133	*A2	FL3	B4	Q19	A2
C38	*A3	C134	*D3	FL4	B3		
C39	*A3	C135	*D3	FL5	C5	R2	*A4
C40	*A2	C136	*D3			R3	B1
C41	B1	C137	*B4	IC1	*C3	R4	*C2
C42	*D1	C138	*A3	IC2	A5	R5	D2
C43	A2	C139	*A3	IC3	*A2	R6	*A3
C44	*A1	C140	*D4	IC4	D4	R8	*A4
C45	*A1	C141	*D4	IC5	A2	R9	*D4
C46	*B4	C142	*A3	IC6	D3	R10	*A4
C47	C4	C143	*A3	IC7	*A3	R11	*A3
C48	*A2	C144	*B2	IC8	*C3	R12	*A3
C49	*D1	C145	*C2	IC9	*A2	R13	*D4
C50	D2	C146	C5	IC10	*A3	R14	*D4
C51	*A3	C147	*D5	IC11	D1	R15	*D4
C52	*D3	C148	*D4	IC12	B1	R16	*A5
C53	C4	C149	*D4	IC13	*B4	R17	*A5
C54	*C4	C150	*B2	IC14	C4	R18	*B3
C55	C4	C151	*C2	IC15	A1	R19	*A3
C56	A2	C152	*B2	IC16	B1	R20	*A2
C57	*A1	C153	*B2	IC17	B4	R21	*D5
C58	*A1	C154	*B2	IC18	D4	R22	*A5
C59	*A1	C155	*D3	IC19	*D3	R23	*D5
C60	*B4	C156	*B4	IC20	*D2	R24	*A4
C61	*A3	C157	*B2	IC21	C2	R25	*A2
C62	*C1	C158	*B2	IC22	C1	R26	D4
C63	*C2	C159	*B2	IC23	B4	R27	*D5
C64	*C1	C160	B2	IC24	*A2	R28	*D4
C65	*C4	C161	B2	IC25	B2	R29	A2
C66	*C4	C162	B2	IC26	*B1	R30	D4
C67	*B1	C163	*B4	IC27	D3	R31	*A5
C68	*A3	C164	B2	IC28	*B2	R32	*A4
C69	*D4	C165	*B2	IC29	*A3	R33	*A3
C70	*D4	C166	*B3	IC30	*A3	R34	*A3
C71	*D4	C167	*B3	IC31	*B3	R35	D3
C72	A4	C168	D2	IC32	D4	R36	*B3
C73	*D3	C169	B2	IC33	*D3	R37	*A2
C74	*D3	C170	*B4	IC34	*B2	R38	D4
C75	*D3	C171	*B4	IC35	*C2	R39	*C4
C76	*A1	C172	*B4	IC36	B4	R40	*B3
C77	*A1	C173	*B2	IC38	*B2	R41	*C4
C78	D2	C174	C5	IC39	B2	R42	*A3
C79	*D4	C175	B2	IC40	*B1	R43	A2
C80	*D4	C176	B2	IC41	*B3	R44	*B4
C81	*A1	C177	*B2	IC42	*B1	R45	*C4
C82	B5	C178	*B2	IC43	C2	R46	*C4
C83	B5	C179	*B2	IC44	D3	R47	*B4
C84	B5	C180	*B3	IC45	*D2	R48	*C4
C85	A4	C181	C3	IC46	C1	R49	C5
C86	B4	C182	*B2	IC47	D5	R50	*B3
C87	B5	C183	*B3	IC48	C5	R51	*B3
C88	*A1	C184	*B3	IC49	D2	R52	*B3
C89	*C3	C185	*B3	IC50	C3	R53	*C4
C90	*D5	C186	*B3	IC51	*C4	R54	*C3
C91	*D4	C187	*C5	IC52	C4	R55	*C3
C92	*D4	C188	D5	IC53	*C5	R56	*A1
C93	D3	C189	D2	IC54	*D2	R57	C5

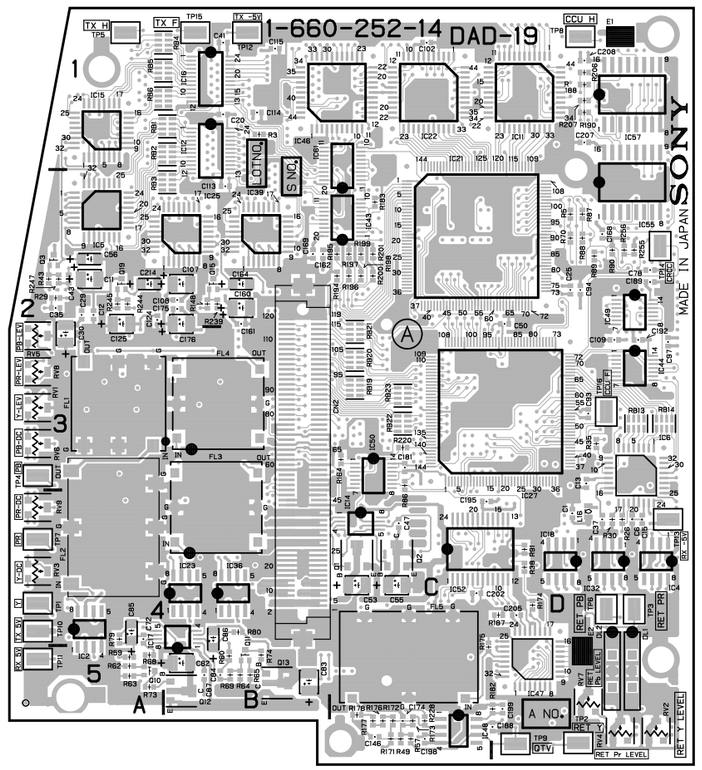

HDC-700 : S/N 11006 and Higher, 13001 and Higher
HDCA-750 : S/N 11006 and Higher

DAD-19 -A SIDE-
1-660-252-14

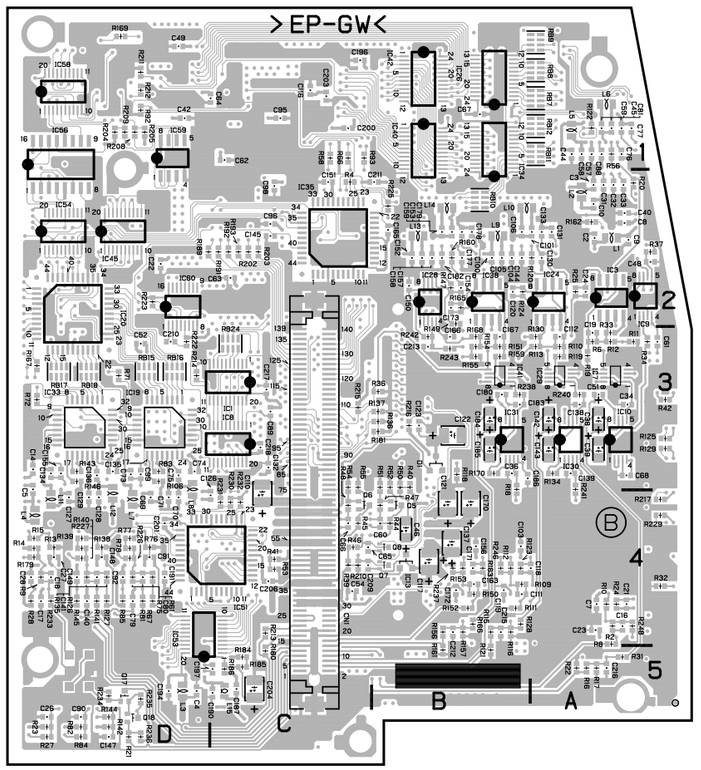

DAD-19 -B SIDE-
1-660-252-14

R58	*C1	R175	C5		
R59	A5	R176	C5	RV1	A3
R60	B5	R177	C5	RV2	D5
R61	*D4	R178	C5	RV3	A4
R62	A5	R179	*D4	RV4	D5
R63	A5	R180	*C5	RV5	A3
R64	B5	R181	*B3	RV6	A3
R65	B5	R182	D5	RV7	D5
R66	*C1	R183	C2	RV8	A3
R67	*D4	R184	*C5	RV9	A4
R68	A5	R185	*C5		
R69	B5	R186	*C5	TP1	A4
R70	D2	R187	D4	TP2	D5
R71	*D3	R188	D1	TP3	D4
R72	*D3	R189	*D2	TP4	A3
R73	A5	R190	D1	TP5	A1
R74	B5	R191	*C2	TP6	D4
R75	*D4	R192	*C2	TP7	A4
R76	*D4	R193	*C2	TP8	D1
R77	*D4	R194	C2	TP9	D5
R78	*D4	R195	C2	TP10	A4
R79	A4	R196	C2	TP11	A5
R80	B4	R197	C2	TP12	B1
R81	*D4	R198	C2	TP13	D4
R82	*D5	R199	C2	TP14	D2
R83	*D3	R200	C2	TP15	B1
R84	*D5	R201	C2	TP16	D3
R85	*D4	R202	*C2		
R86	C3	R203	*C2	*:B SIDE	
R87	D2	R204	*D1		
R88	D2	R205	*D1		
R89	D2	R206	D1		
R90	D2	R207	D1		
R91	D4	R208	*D1		
R92	*D1	R209	*D1		
R93	*C1	R210	*C4		
R106	*D3	R211	*D1		
R109	*B4	R212	*D1		
R110	*A3	R213	*C4		
R111	*B4	R214	*D3		
R112	*B4	R215	*C3		
R113	*A3	R216	*B3		
R115	*B4	R217	*A4		
R116	*B4	R220	C3		
R118	*B3	R222	*D3		
R119	*A3	R223	*D2		
R120	*A2	R225	*B2		
R121	*B5	R226	*D4		
R122	*A1	R227	*D4		
R123	*B4	R228	C5		
R124	*B2	R229	*A4		
R125	*A3	R230	*C4		
R126	*D4	R231	*C4		
R127	*D4	R232	*C4		
R128	*B4	R233	*D4		
R129	*A3	R234	*D5		
R130	*A3	R235	*D5		
R134	*A3	R236	*D5		
R135	*D4	R237	*B4		
R136	*B3	R238	*B3		
R137	*B3	R239	B2		
R138	*D4	R240	*A3		
R139	*D4	R241	*A3		
R140	*D4	R242	*B3		
R141	*D4	R243	*B3		
R142	*D5	R244	A2		
R143	*D3	R245	A2		
R144	*D5	R246	*B4		
R145	*D4	R247	A2		
R146	*D3	R248	*A4		
R147	*B2	R255	D2		
R148	B2	R256	D2		
R149	*B2				
R150	*B4	RB1	B1		
R151	*B3	RB2	B1		
R152	*B4	RB3	B2		
R153	*B4	RB4	A1		
R154	*B3	RB5	A1		
R155	*B3	RB6	A1		
R156	*B4	RB7	*A1		
R157	*B4	RB8	*A1		
R159	*B3	RB9	*A1		
R160	*B2	RB10	*B2		
R161	*B5	RB11	*A1		
R162	*A2	RB12	*A1		
R163	*B4	RB13	D3		
R164	C3	RB14	D3		
R165	*B2	RB15	*D3		
R166	*B4	RB16	*D3		
R167	*D3	RB17	*D3		
R168	*B3	RB18	*D3		
R169	*D1	RB19	C3		
R170	*B3	RB20	C3		
R171	C5	RB21	C3		
R172	C5	RB22	C3		
R173	C5	RB23	C3		
R174	D4	RB24	*C3		

DAD-19 (1-660-252-13)

CN1	*C4	C94	D2	C190	C5
CN2	B3	C95	C1	C191	*D4
		C96	*C2	C192	*C1
C1	*B1	C97	*D3	C193	*C1
C2	*A2	C98	*C2	C194	*C5
C3	*A2	C99	*C3	C195	D4
C4	*D4	C100	*B2	C196	C1
C5	*D4	C101	*A2	C197	C5
C6	D4	C102	C1	C198	C5
C7	*A4	C103	*B4	C199	D5
C8	*A2	C104	*B2	C200	C1
C9	*A2	C105	*B2	C201	*D4
C10	*A2	C106	*B2	C202	*C4
C11	A2	C107	B2	C203	C1
C12	A2	C108	B2	C204	C4
C13	*D3	C109	D3	C205	D4
C14	*D3	C110	*C4	C206	*C4
C15	D4	C111	*B4	C207	D1
C16	*A4	C112	*A3	C208	D1
C17	*D4	C113	*D4	C209	*C4
C18	*D4	C114	*D4	C210	*D3
C19	*A3	C115	*C2	C211	B1
C20	A1	C116	C1	C212	*B4
C21	*A4	C117	*B4	C213	*B3
C22	*D2	C118	*A4	C214	A2
C23	*A4	C119	*B4	C215	*B4
C24	*A2	C120	*B2	C216	*A5
C25	D2	C121	*B4		
C26	*D5	C122	*B3		
C27	*D4	C123	*B3	D1	*B3
C28	*D4	C124	A2		
C29	A2	C125	A2	DL1	D5
C30	A3	C126	*D4	DL2	D5
C31	*A2	C127	*D3		
C32	*A2	C128	*D3	E1	D1
C33	*A2	C129	*D3	E2	A5
C34	*A3	C130	*A2		
C35	A2	C131	*A2	FL1	A3
C36	*B3	C132	*D4	FL2	A4
C37	D4	C133	*A2	FL3	B4
C38	*A3	C134	*D3	FL4	B3
C39	*A3	C135	*D3	FL5	C5
C40	*A2	C136	*D3		
C41	*B1	C137	*B4	IC1	*B2
C42	D1	C138	*A3	IC2	A5
C43	A2	C139	*A3	IC3	*A2
C44	*A1	C140	*D4	IC4	D4
C45	*A1	C141	*D4	IC5	A2
C46	*B4	C142	*A3	IC6	D3
C47	C4	C143	*A3	IC7	*A3
C48	*A2	C144	*B2	IC8	A2
C49	D1	C145	*D2	IC9	*A2
C50	D2	C146	*C1	IC10	*A3
C51	*A3	C147	*D5	IC11	D1
C52	D3	C148	*D4	IC12	*B1
C53	C4	C149	*D4	IC13	*B4
C54	*C4	C150	*B2	IC14	C4
C55	C4	C151	D3	IC15	A1
C56	A2	C152	*B2	IC16	A1
C57	*A1	C153	*B2	IC17	B4
C58	*A1	C154	*B2	IC18	D4
C59	*A1	C155	*D3	IC19	*C3
C60	*B4	C156	*B4	IC20	*D3
C61	*A3	C157	*B2	IC21	C2
C62	*C2	C158	*B2	IC22	C1
C63	*C2	C159	*B2	IC23	B4
C64	C1	C160	B2	IC24	*A2
C65	*C4	C161	B2	IC25	B2
C66	*C4	C162	D3	IC26	*C2
C67	A1	C163	*B4	IC27	D3
C68	*A3	C164	B2	IC28	*B2
C69	*C3	C165	*D1	IC29	*A3
C70	*C3	C166	*B3	IC30	*A3
C71	*C3	C167	*B3	IC31	*B3
C72	A4	C168	D2	IC32	D4
C73	*C3	C169	D3	IC33	*D3
C74	*C3	C170	*B4	IC34	*C2
C75	*C3	C171	*B4	IC35	*D3
C76	*A1	C172	*B4	IC36	B4
C77	*A1	C173	*B2	IC37	*D1
C78	D3	C174	*D2	IC38	*B2
C79	*D4	C175	B2	IC39	B2
C80	*D4	C176	B2	IC40	D2
C81	*A1	C177	*B2	IC41	*B3
C82	B5	C178	*B2	IC42	*D2
C83	B5	C179	*B2	IC43	*D2
C84	B5	C180	*B3	IC44	*C1
C85	A4	C181	*C1	IC45	D3
C86	B4	C182	*B2	IC46	B1
C87	B5	C183	*B3	IC47	D5
C88	*A1	C184	*B3	IC48	C5
C89	*D3	C185	*B3	IC49	*C2
C90	*D5	C186	*B3	IC50	*C1
C91	*D4	C187	C5	IC51	*C4
C92	*D4	C188	D5	IC52	C4
C93	D3	C189	C5	IC53	*C4

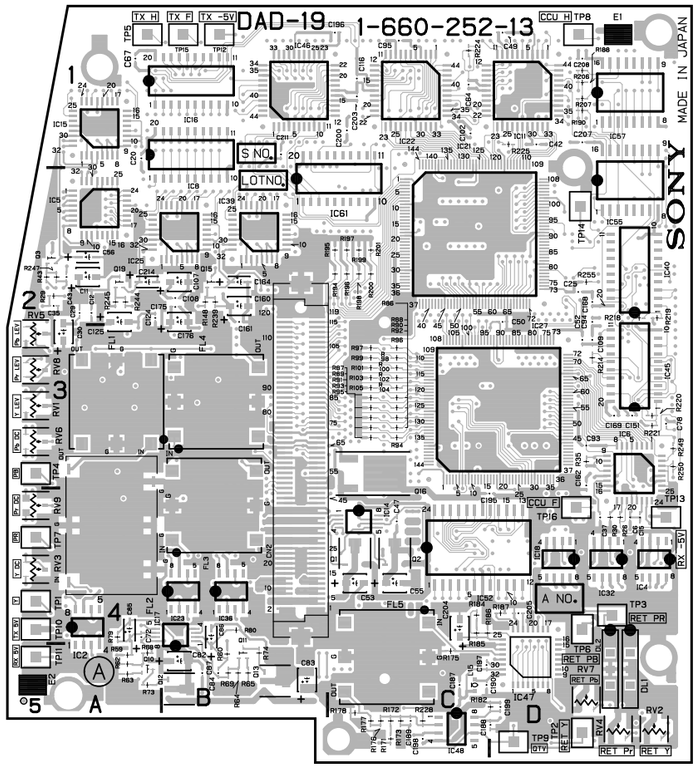

HDC-700 : S/N 10053 through 11005
HDCA-750 : S/N 10096 through 11005

DAD-19 -A SIDE-
1-660-252-13

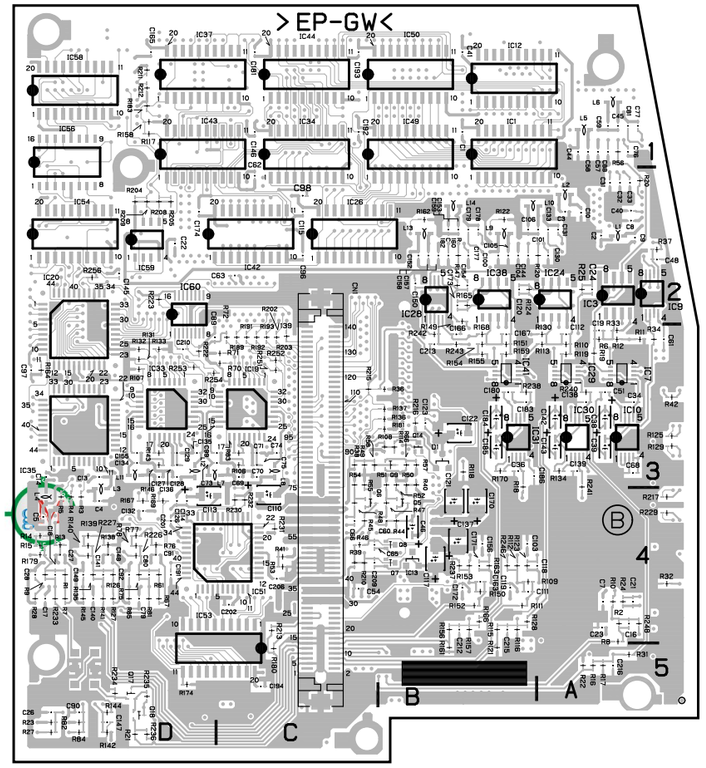

DAD-19 -B SIDE-
1-660-252-13

IC54	*D2	R43	A2	R140	*D4	R237	*B4
IC55	D2	R44	*B4	R141	*D4	R238	*B3
IC56	*D2	R45	*C4	R142	*D5	R239	B2
IC57	D1	R46	*C4	R143	*D3	R240	*A3
IC58	*D1	R47	*B4	R144	*D5	R241	*A3
IC59	*D2	R48	*C4	R145	*D4	R242	*B3
IC60	*D3	R49	*C3	R146	*D3	R243	*B3
IC61	B2	R50	*B3	R147	*B2	R244	A2
		R51	*B3	R148	B2	R245	A2
L1	*A2	R52	*B3	R149	*B2	R246	*B4
L2	*A2	R53	*C4	R150	*B4	R247	A2
L3	*D4	R54	*C3	R151	*B3	R248	*A4
L4	*D4	R55	*C3	R152	*B4	R249	D3
L5	*A1	R56	*A1	R153	*B4	R250	D3
L6	*A1	R57	*B3	R154	*B3	R251	*C3
L7	*D3	R58	*C3	R155	*B3	R252	*C3
L8	*C3	R59	A5	R156	*B4	R253	*D3
L9	*B2	R60	B5	R157	*B4	R254	*D3
L10	*B2	R61	*D4	R158	*D1	R255	D2
L11	*D3	R62	A5	R159	*B3	R256	*D2
L12	*D3	R63	A5	R160	*B2		
L13	*B2	R64	B5	R161	*B5	TP1	A4
L14	*B2	R65	B5	R162	*B2	TP2	D5
L15	C5	R66	*B3	R163	*B4	TP3	D4
		R67	*D4	R164	*D3	TP4	A3
Q1	C4	R68	A5	R165	*B2	TP5	A1
Q2	C4	R69	B5	R166	*B4	TP6	D4
Q3	A2	R70	*C3	R167	*D4	TP7	A4
Q5	*B4	R71	*C3	R168	*B3	TP8	D1
Q6	*C4	R72	*C3	R169	*D4	TP9	D5
Q7	*B4	R73	A5	R170	*B3	TP10	A4
Q8	*B4	R74	B5	R171	C5	TP11	A5
Q9	*B3	R75	*D4	R172	C5	TP12	B1
Q10	A5	R76	*D4	R173	C5	TP13	D4
Q11	B5	R77	*D4	R174	*D5	TP14	D2
Q12	B5	R78	*D4	R175	C5	TP15	B1
Q13	B5	R79	A4	R176	C5	TP16	D4
Q14	*B3	R80	B4	R177	C5		
Q15	B2	R81	*D4	R178	C5	*:B SIDE	
Q16	C3	R82	*D5	R179	*D4		
Q17	*D5	R83	*C3	R180	*C5		
Q18	*D5	R84	*D5	R181	*B3		
Q19	A2	R85	*D4	R182	D5		
		R86	C3	R183	*D1		
RV1	A3	R87	C3	R184	C4		
RV2	D5	R88	C3	R185	C4		
RV3	A4	R89	C3	R186	C4		
RV4	D5	R90	C3	R187	D4		
RV5	A3	R91	C3	R188	D1		
RV6	A3	R92	C3	R189	*C3		
RV7	D5	R93	C3	R190	D1		
RV8	A3	R94	C3	R191	*C3		
RV9	A4	R95	C3	R192	*C3		
		R96	C3	R193	*C3		
R1	*D4	R97	C3	R194	C2		
R2	*A4	R98	C3	R195	C2		
R3	*D4	R99	C3	R196	C2		
R4	*D4	R100	C3	R197	C2		
R5	*D4	R101	C3	R198	C2		
R6	*A3	R102	C3	R199	C2		
R7	*D4	R103	C3	R200	C2		
R8	*A4	R104	C3	R201	C2		
R9	*D4	R105	C3	R202	*C3		
R10	*A4	R106	*C3	R203	*C3		
R11	*A3	R107	*D3	R204	*D2		
R12	*A3	R108	*B3	R205	*D2		
R13	*D4	R109	*B4	R206	D1		
R14	*D4	R110	*A3	R207	D1		
R15	*D4	R111	*B4	R208	*D2		
R16	*A5	R112	*B4	R209	*D2		
R17	*A5	R113	*A3	R210	*C4		
R18	*B3	R114	*B3	R211	*D1		
R19	*A3	R115	*B4	R212	*D1		
R20	*A2	R116	*B4	R213	*C4		
R21	*D5	R117	*D1	R214	D3		
R22	*A5	R118	*B3	R215	*C3		
R23	*D5	R119	*A3	R216	*B3		
R24	*A4	R120	*A2	R217	*A4		
R25	*A2	R121	*B5	R218	D2		
R26	D4	R122	*B2	R219	D2		
R27	*D5	R123	*B4	R220	D3		
R28	*D4	R124	*B2	R221	D3		
R29	A2	R125	*A3	R222	*D3		
R30	D4	R126	*D4	R223	*D2		
R31	*A5	R127	*D4	R224	C1		
R32	*A4	R128	*B4	R225	D1		
R33	*A3	R129	*A3	R226	*D4		
R34	*A3	R130	*A3	R227	*D4		
R35	D3	R131	*D3	R228	C5		
R36	*B3	R132	*D3	R229	*A4		
R37	*A2	R133	*D3	R230	*C4		
R38	*C3	R134	*A3	R231	*C4		
R39	*C4	R135	*D4	R232	*C4		
R40	*B3	R136	*B3	R233	*D4		
R41	*C4	R137	*B3	R234	*D5		
R42	*A3	R138	*D4	R235	*D5		
		R139	*D4	R236	*D5		

DAD-19 HDC-700/HDCA-750

DAD-19 (1-660-252-12)

CN1	*C4	C94	D2	C190	C5	IC55	D2	R46	*C4	R147	*B2	R244	A2
CN2	B3	C95	C1	C191	*D4	IC56	*D2	R47	*B4	R148	B2	R245	A2
		C96	*C2	C192	*C1	IC57	D1	R48	*C4	R149	*B2	R246	*B4
C1	*B1	C97	*D3	C193	*C1	IC58	*D1	R50	*B3	R150	*B4	R247	A2
C2	*A2	C98	*C2	C194	*C5	IC59	*D2	R51	*B3	R151	*B3	R248	*A4
C3	*A2	C99	*C3	C195	D4	IC60	*D3	R52	*B3	R152	*B4	R249	D3
C4	*D4	C100	*B2	C196	C1	IC61	B2	R53	*C4	R153	*B4	R250	D3
C5	*D4	C101	*A2	C197	C5			R54	*C3	R154	*B3	R251	*C3
C6	D4	C102	C1	C198	C5	L1	*A2	R55	*C3	R155	*B3	R252	*C3
C7	*A4	C103	*B4	C199	D5	L2	*A2	R56	*A1	R156	*B4	R253	*D3
C8	*A2	C104	*B2	C200	C1	L3	*D4	R59	A5	R157	*B4	R254	*D3
C9	*A2	C105	*B2	C201	*D4	L4	*D4	R60	B5	R158	*D1		
C10	*A2	C106	*B2	C202	*C4	L5	*A1	R61	*D4	R159	*B3	TP1	A4
C11	A2	C107	B2	C203	C1	L6	*A1	R62	A5	R160	*B2	TP2	D5
C12	A2	C108	B2	C204	C4	L7	*D3	R63	A5	R161	*B5	TP3	D4
C13	*D3	C109	D3	C205	D4	L8	*C3	R64	B5	R162	*B2	TP4	A3
C14	*D3	C110	*C4	C206	*C4	L9	*B2	R65	B5	R163	*B4	TP5	A1
C15	D4	C111	*B4	C207	D1	L10	*B2	R67	*D4	R164	*D3	TP6	D4
C16	*A4	C112	*A3	C208	D1	L11	*D3	R68	A5	R165	*B2	TP7	A4
C17	*D4	C113	*D4	C209	*C4	L12	*D3	R69	B5	R166	*B4	TP8	D1
C18	*D4	C114	*D4	C210	*D3	L13	*B2	R70	*C3	R167	*D4	TP9	D5
C19	*A3	C115	*C2	C211	B1	L14	*B2	R71	*C3	R168	*B3	TP10	A4
C20	A1	C116	C1	C212	*B4	L15	C5	R72	*C3	R169	*D4	TP11	A5
C21	*A4	C117	*B4	C213	*B3			R73	A5	R170	*B3	TP12	B1
C22	*D2	C118	*A4	C214	A2	Q1	C4	R74	B5	R171	C5	TP13	D4
C23	*A4	C119	*B4	C215	*B4	Q2	C4	R75	*D4	R172	C5	TP14	D2
C24	*A2	C120	*B2	C216	*A5	Q3	A2	R76	*D4	R173	C5	TP15	B1
C25	D2	C121	*B4			Q5	*B4	R77	*D4	R174	*D5	TP16	D4
C26	*D5	C122	*B3	DL1	D5	Q6	*C4	R78	*D4	R175	C5		
C27	*D4	C123	*B3	DL2	D5	Q7	*B4	R79	A4	R176	C5	*:B SIDE	
C28	*D4	C124	A2			Q8	*B4	R80	B4	R177	C5		
C29	A2	C125	A2	D1	*B3	Q10	A5	R81	*D4	R178	C5		
C30	A3	C126	*D4			Q11	B5	R82	*D5	R179	*D4		
C31	*A2	C127	*D3	E1	D1	Q12	B5	R83	*C3	R180	*C5		
C32	*A2	C128	*D3	E2	A5	Q13	B5	R84	*D5	R181	*B3		
C33	*A2	C129	*D3			Q14	*B3	R85	*D4	R182	D5		
C34	*A3	C130	*A2	FL1	A3	Q15	B2	R86	C3	R183	*D1		
C35	A2	C131	*A2	FL2	A4	Q16	C3	R87	C3	R184	C4		
C36	*B3	C132	*D4	FL3	B4	Q17	*D5	R88	C3	R185	C4		
C37	D4	C133	*A2	FL4	B3	Q18	*D5	R89	C3	R186	C4		
C38	*A3	C134	*D3	FL5	C5	Q19	A2	R90	C3	R187	D4		
C39	*A3	C135	*D3					R91	C3	R188	D1		
C40	*A2	C136	*D3	IC1	*B2	RV1	A3	R92	C3	R189	*C3		
C41	*B1	C137	*B4	IC2	A5	RV2	D5	R93	C3	R190	D1		
C42	D1	C138	*A3	IC3	*A2	RV3	A4	R94	C3	R191	*C3		
C43	A2	C139	*A3	IC4	D4	RV4	D5	R95	C3	R192	*C3		
C44	*A1	C140	*D4	IC5	A2	RV5	A3	R96	C3	R193	*C3		
C45	*A1	C141	*D4	IC6	D3	RV6	A3	R97	C3	R194	C2		
C46	*B4	C142	*A3	IC7	*A3	RV7	D5	R98	C3	R195	C2		
C47	C4	C143	*A3	IC8	A2	RV8	A3	R99	C3	R196	C2		
C48	*A2	C144	*B2	IC9	*A2	RV9	A4	R100	C3	R197	C2		
C49	D1	C145	*D2	IC10	*A3			R101	C3	R198	C2		
C50	D2	C146	*C1	IC11	D1	R1	*D4	R102	C3	R199	C2		
C51	*A3	C147	*D5	IC12	*B1	R2	*A4	R103	C3	R200	C2		
C52	D3	C148	*D4	IC13	*B4	R3	*D4	R104	C3	R201	C2		
C53	C4	C149	*D4	IC14	C4	R4	*D4	R105	C3	R202	*C3		
C54	*C4	C150	*B2	IC15	A1	R5	*D4	R106	*C3	R203	*C3		
C55	C4	C151	D3	IC16	A1	R6	*A3	R107	*D3	R204	*D2		
C56	A2	C152	*B2	IC17	B4	R7	*D4	R108	*B3	R205	*D2		
C57	*A1	C153	*B2	IC18	D4	R8	*A4	R109	*B4	R206	D1		
C58	*A1	C154	*B2	IC19	*C3	R9	*D4	R110	*A3	R207	D1		
C59	*A1	C155	*D3	IC20	*D3	R10	*A4	R111	*B4	R208	*D2		
C60	*B4	C156	*B4	IC21	C2	R11	*A3	R112	*B4	R209	*D2		
C61	*A3	C157	*B2	IC22	C1	R12	*A3	R113	*A3	R210	*C4		
C62	*C2	C158	*B2	IC23	B4	R13	*D4	R114	*B3	R211	*D1		
C63	*C2	C159	*B2	IC24	*A2	R14	*D4	R115	*B4	R212	*D1		
C64	C1	C160	B2	IC25	B2	R15	*D4	R116	*B4	R213	*C4		
C65	*C4	C161	B2	IC26	*C2	R16	*A5	R117	*D1	R214	D3		
C66	*C4	C162	D3	IC27	D3	R17	*A5	R118	*B3	R215	*C3		
C67	A1	C163	*B4	IC28	*B2	R18	*B3	R119	*A3	R216	*B3		
C68	*A3	C164	B2	IC29	*A3	R19	*A3	R120	*A2	R217	*A4		
C69	*C3	C165	*D1	IC30	*A3	R20	*A2	R121	*B5	R218	D2		
C70	*C3	C166	*B3	IC31	*B3	R21	*D5	R122	*B2	R219	D2		
C71	*C3	C167	*B3	IC32	D4	R22	*A5	R123	*B4	R220	D3		
C72	A4	C168	D2	IC33	*D3	R23	*D5	R124	*B2	R221	D3		
C73	*C3	C169	D3	IC34	*C2	R24	*A4	R125	*A3	R222	*D3		
C74	*C3	C170	*B4	IC35	*D3	R25	*A2	R126	*D4	R223	*D2		
C75	*C3	C171	*B4	IC36	B4	R26	D4	R127	*D4	R224	C1		
C76	*A1	C172	*B4	IC37	*D1	R27	*D5	R128	*B4	R225	D1		
C77	*A1	C173	*B2	IC38	*B2	R28	*D4	R129	*A3	R226	*D4		
C78	D3	C174	*D2	IC39	B2	R29	A2	R130	*A3	R227	*D4		
C79	*D4	C175	B2	IC40	D2	R30	D4	R131	*D3	R228	C5		
C80	*D4	C176	B2	IC41	*B3	R31	*A5	R132	*D3	R229	*A4		
C81	*A1	C177	*B2	IC42	*D2	R32	*A4	R133	*D3	R230	*D2		
C82	B5	C178	*B2	IC43	*D2	R33	*A3	R134	*A3	R231	*C4		
C83	B5	C179	*B2	IC44	*C1	R34	*A3	R135	*D4	R232	*C4		
C84	B5	C180	*B3	IC45	D3	R35	D3	R136	*B3	R233	*D4		
C85	A4	C181	*C1	IC46	B1	R36	*B3	R137	*B3	R234	*D5		
C86	B4	C182	*B2	IC47	D5	R37	*A2	R138	*D4	R235	*D5		
C87	B5	C183	*B3	IC48	C5	R39	*C4	R139	*D4	R236	*D5		
C88	*A1	C184	*B3	IC49	*C2	R40	*B3	R140	*D4	R237	*B4		
C89	*D3	C185	*B3	IC50	*C1	R41	*C4	R141	*D4	R238	*B3		
C90	*D5	C186	*B3	IC51	*C4	R42	*A3	R142	*D5	R239	B2		
C91	*D4	C187	C5	IC52	C4	R43	A2	R143	*D3	R240	*A3		
C92	*D4	C188	D5	IC53	*C4	R44	*B4	R144	*D5	R241	*A3		
C93	D3	C189	C5	IC54	*D2	R45	*C4	R145	*D4	R242	*B3		
								R146	*D3	R243	*B3		

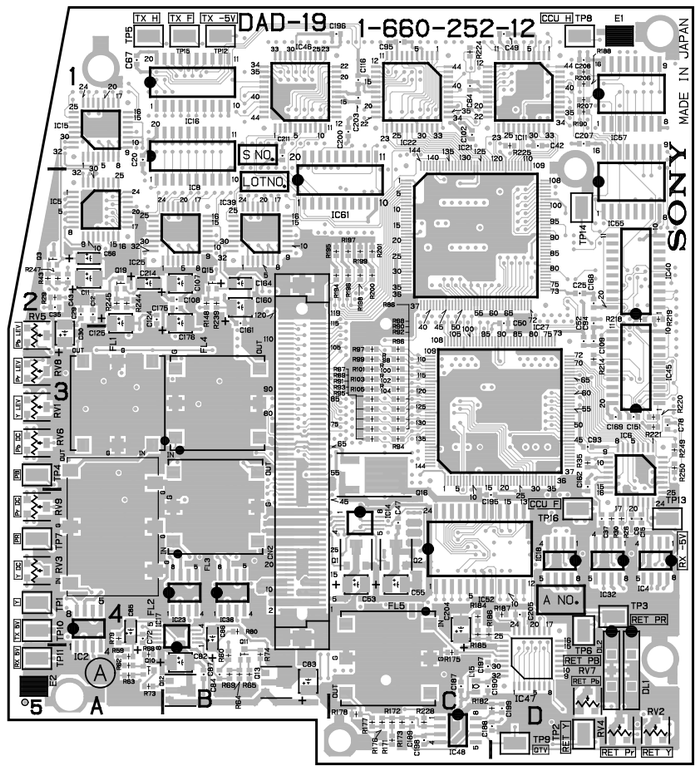

HDC-700 : S/N 10013 through 10052
HDCA-750 : S/N 10041 through 10095

DAD-19 -A SIDE-
1-660-252-12

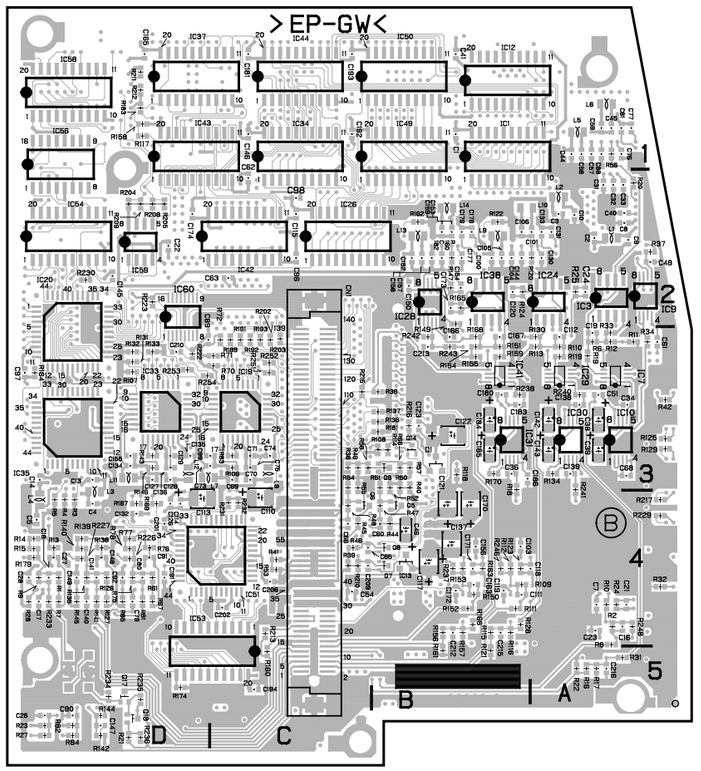

DAD-19 -B SIDE-
1-660-252-12

DAD-19 (1-660-252-11)

CN1	*C4	C94	D2	C190	*D4
CN2	B3	C95	C1	C191	*D4
		C96	*C2	C192	*C1
C1	*B1	C97	*D3	C193	*C1
C2	*A2	C98	*C2	C194	*C5
C3	*A2	C99	*C3	C195	C4
C4	*D4	C100	*B2	C196	C1
C5	*D4	C101	*A2	C197	*D5
C6	D4	C102	C1	C198	D5
C7	*B5	C103	*B4	C199	D5
C8	*A2	C104	*B2	C200	C1
C9	*A2	C105	*B2	C201	*D4
C10	*A2	C106	*B2	C202	*C4
C11	*A3	C107	*A3	C203	C1
C12	*A3	C108	*A3	C204	*D5
C13	*D3	C109	D3	C205	*D5
C14	*D3	C110	*C4	C206	*C4
C15	D4	C111	*B4	C207	D1
C16	*B5	C112	*B3	C208	D1
C17	*D4	C113	*D4	C209	*C4
C18	*D4	C114	*D4	C210	*D3
C19	*A3	C115	*C2	C211	B1
C20	A1	C116	C1		
C21	*B5	C117	*B4	D1	*B3
C22	*D2	C118	*B4		
C23	*B5	C119	*B4	E1	D1
C24	*A3	C120	*B3	E2	A5
C25	D2	C121	*B4		
C26	*D5	C122	*B3	FL1	A4
C27	*D4	C123	*B3	FL2	A4
C28	*D4	C124	*A3	FL3	B4
C29	*A3	C125	*A3	FL4	B3
C30	*A3	C126	*D4	FL5	C5
C31	*A2	C127	*D3		
C32	*A2	C128	*D3	IC1	*B2
C33	*A2	C129	*D3	IC2	B5
C34	*A2	C130	*A2	IC3	A3
C35	*A2	C131	*A2	IC4	D4
C36	B5	C132	*D4	IC5	A2
C37	D4	C133	*A2	IC6	D3
C38	*A2	C134	*D3	IC7	A3
C39	*A2	C135	*D3	IC8	A2
C40	*A2	C136	*D3	IC9	A2
C41	*B1	C137	*B4	IC10	A2
C42	D1	C138	*B2	IC11	D1
C43	A2	C139	*B2	IC12	*B1
C44	*A1	C140	*D4	IC13	*B4
C45	*A1	C141	*D4	IC14	C4
C46	*B4	C142	*B2	IC15	A1
C47	C4	C143	*B2	IC16	A1
C48	*A2	C144	*B2	IC17	C4
C49	D1	C145	*D2	IC18	D4
C50	D2	C146	*C1	IC19	*C3
C51	A2	C147	*D4	IC20	*D3
C52	D3	C148	*D4	IC21	C2
C53	C4	C149	*D4	IC22	C1
C54	*C4	C150	A2	IC23	B4
C55	C4	C151	D3	IC24	*B3
C56	*A2	C152	*B2	IC25	B2
C57	*A1	C153	*B2	IC26	*C2
C58	*A1	C154	*B2	IC27	D3
C59	*A1	C155	*D3	IC29	B3
C60	*B4	C156	*B4	IC30	B2
C61	A2	C157	*B2	IC31	B2
C62	*C2	C158	*B2	IC32	D4
C63	*C2	C159	*B2	IC33	*D3
C64	C1	C160	*B3	IC34	*C2
C65	*C4	C161	*B3	IC35	*D3
C66	*C4	C162	D3	IC36	B4
C67	A1	C163	*B4	IC37	*D1
C68	A2	C164	*A2	IC38	*B3
C69	*C3	C165	*D1	IC39	B2
C70	*C3	C166	B2	IC40	D2
C71	*C3	C167	*B3	IC41	B3
C72	*B4	C168	D2	IC42	*D2
C73	*C3	C169	D3	IC43	*D2
C74	*C3	C170	*B4	IC44	*C1
C75	*C3	C171	*B4	IC45	D3
C76	*A1	C172	*B4	IC46	B1
C77	*A1	C173	*B3	IC47	D5
C78	D3	C174	*D2	IC48	D5
C79	*D4	C175	*B3	IC49	*C2
C80	*D4	C176	*B3	IC50	*C1
C81	*A1	C177	*B2	IC51	*C4
C82	C5	C178	*B2	IC52	C4
C83	C5	C179	*B2	IC53	*C4
C84	*C4	C180	B2	IC54	*D2
C85	B5	C181	*C1	IC55	D2
C86	C4	C182	*B2	IC56	*D2
C87	C5	C183	*B2	IC57	D1
C88	*A1	C184	*B2	IC58	*D1
C89	*C3	C185	*B2	IC59	*D2
C90	*D5	C186	B2	IC60	*D3
C91	*D4	C187	*D4	IC61	B2
C92	*D4	C188	D5		
C93	D3	C189	*D5		

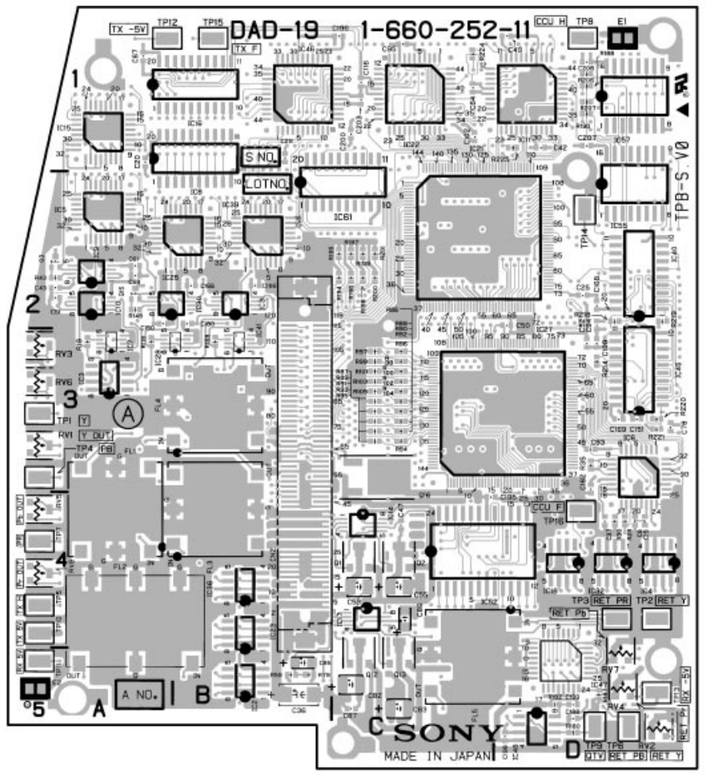

HDC-700 : S/N 10001 through 10012
HDCA-750 : S/N 10001 through 10040

DAD-19 -A SIDE-
1-660-252-11

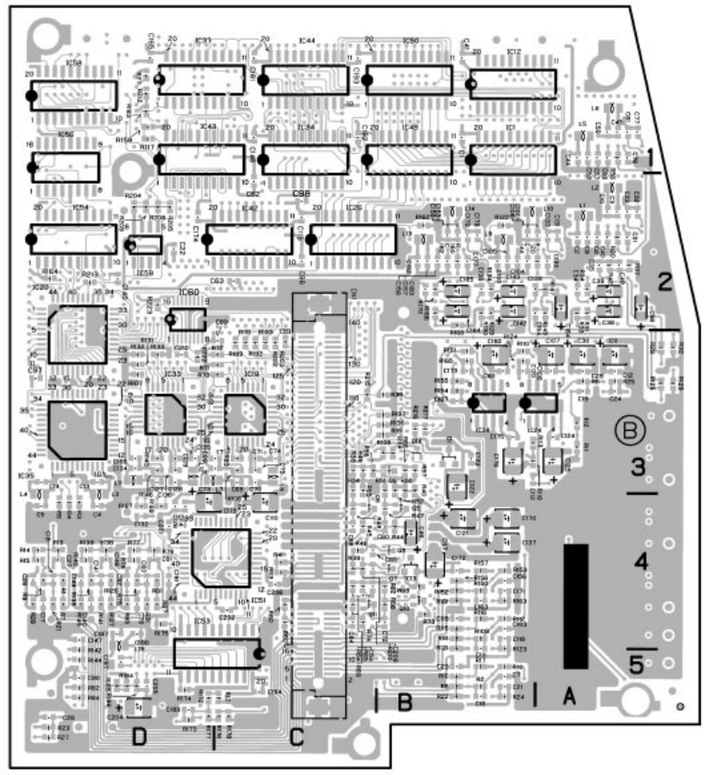

DAD-19 -B SIDE-
1-660-252-11

L1	*A2	R57	*B3	R153	*B4
L2	*A2	R58	*C3	R154	*B3
L3	*D4	R59	B5	R155	*B3
L4	*D4	R60	*C4	R156	*B4
L5	*A1	R61	*D4	R157	*B4
L6	*A1	R62	*B4	R158	*D1
L7	*D3	R63	*B4	R159	B3
L8	*C3	R64	*C4	R160	*B2
L9	*B2	R65	*C4	R161	*B4
L10	*B2	R66	*B3	R162	*B2
L11	*D3	R67	*D4	R163	*B4
L12	*D3	R68	*B4	R164	*D2
L13	*B2	R69	*C4	R165	*B3
L14	*B2	R70	*C3	R166	*B2
L15	*D4	R71	*C3	R167	*D4
		R72	*C3	R168	*B2
Q1	C4	R73	*B4	R169	*D4
Q2	C4	R74	*C4	R170	*B2
Q3	A2	R75	*D4	R171	*C5
Q5	*B4	R76	*D4	R172	*D5
Q6	*C4	R77	*D4	R173	*D5
Q7	*B4	R78	*D4	R174	*D5
Q8	*B4	R79	B5	R175	*D4
Q9	*B3	R80	*C4	R176	*C5
Q10	*B4	R81	*D4	R177	*D5
Q11	*C4	R82	*D5	R178	*C5
Q12	C5	R83	*C3	R180	D5
Q13	C5	R84	*D5	R181	*B3
Q14	*B3	R85	*D4	R182	D5
Q15	A2	R86	C3	R183	*D1
Q16	C3	R87	C3	R184	*D5
		R88	C3	R185	*D5
RV1	A3	R89	C3	R186	*D5
RV2	D5	R90	C3	R187	D5
RV3	A3	R91	C3	R188	D1
RV4	D5	R92	C3	R189	*C3
RV5	A4	R93	C3	R190	D1
RV6	A3	R94	C3	R191	*C3
RV7	D5	R95	C3	R192	*C3
RV8	A4	R96	C3	R193	*C3
		R97	C3	R194	C2
R1	*D4	R98	C3	R195	C2
R2	*B5	R99	C3	R196	C2
R3	*D4	R100	C3	R197	C2
R4	*D4	R101	C3	R198	C2
R5	*D4	R102	C3	R199	C2
R6	*A3	R103	C3	R200	C2
R7	*D4	R104	C3	R201	C2
R8	*B5	R105	C3	R202	*C3
R9	*D4	R106	*C3	R203	*C3
R10	*B5	R107	*D3	R204	*D2
R11	*A3	R108	*B3	R205	*D2
R12	*A3	R109	*B4	R206	D1
R13	*D4	R110	*B3	R207	D1
R14	*D4	R111	*B4	R208	*D2
R15	*D4	R112	*B4	R209	*D2
R16	*B5	R113	*B3	R210	*C4
R17	*B5	R114	*B3	R211	*D1
R19	A3	R115	*B4	R212	*D1
R20	*A2	R116	*B4	R213	*D2
R21	*D4	R117	*D1	R214	D3
R22	*B5	R118	*B3	R215	*C3
R23	*D5	R119	A3	R216	*B3
R24	*B5	R120	*A2	R217	*B3
R25	*A3	R121	*B4	R218	D2
R26	D4	R122	*B2	R219	D2
R27	*D5	R123	*B4	R220	D3
R28	*D4	R124	*B3	R221	D3
R29	*A3	R125	*A3	R222	*D3
R30	D4	R126	*D4	R223	*D2
R31	*A2	R127	*D4	R224	C1
R32	*A3	R128	*B2	R225	D1
R33	*A2	R129	*A3		
R34	*A2	R130	*B2	TP1	A3
R35	D3	R131	*D3	TP2	D4
R36	*B3	R132	*D3	TP3	D4
R37	*A2	R133	*D3	TP4	A3
R38	*C3	R134	*B2	TP5	A4
R39	*C4	R135	*D4	TP6	D5
R40	*B3	R136	*B3	TP7	A4
R41	*C4	R137	*B3	TP8	D1
R42	*A2	R138	*D4	TP9	D5
R43	A2	R139	*D4	TP10	A4
R44	*B4	R140	*D4	TP11	A5
R45	*C4	R141	*D4	TP12	A1
R46	*C4	R142	*D5	TP13	D5
R47	*B4	R143	*D3	TP14	D2
R48	*C4	R144	*D5	TP15	B1
R49	*C3	R145	*D4	TP16	D4
R50	*B3	R146	*D3		
R51	*B3	R147	*A2	*:B SIDE	
R52	*B3	R148	A2		
R53	*C4	R149	*A2		
R54	*C3	R150	*B4		
R55	*C3	R151	*B3		
R56	*A1	R152	*B4		

AU-203 (1-660-244-13)

CN1	D1	C100	*F5	IC19	G1	R14	*D1
		C101	*B3	IC20	F1	R15	*B1
C1	*E1	C102	E3	IC21	*F4	R16	*H5
C2	*E1	C103	B2	IC22	C3	R17	*D1
C3	*E1	C104	*C3	IC23	E4	R18	*H5
C4	*E1	C105	B3	IC24	*E4	R19	*D1
C5	*E1	C106	B2	IC25	*F4	R20	*D1
C6	*E1	C107	B3	IC26	C4	R21	*A1
C7	H4	C108	*C3	IC27	C4	R22	*A1
C8	A5	C109	*C3	IC28	*B3	R23	G5
C9	D5	C110	*E4	IC29	E3	R24	*A1
C10	*G4	C111	E4	IC30	D3	R25	*A5
C11	*E1	C112	E4	IC31	*G5	R26	*A5
C12	B5	C115	*D4	IC32	*A3	R27	B5
C13	D5	C118	*F4	IC33	E4	R28	*D5
C14	*G4	C119	A2	IC34	*E4	R29	*D5
C15	G5	C120	*B1	IC35	*B1	R30	D5
C16	G4	C121	*E3	IC40	E3	R31	*G4
C17	G4	C122	*E4	IC41	C3	R32	*H5
C18	G4	C123	*E3	IC42	C3	R33	*A5
C19	*A5	C127	C2	IC43	D3	R34	*D5
C20	*D5	C128	C2	IC44	*E2	R35	*E1
C21	*A5	C129	*D3	IC45	F3	R36	*G5
C22	*D5	C130	*E3	IC46	*F2	R37	*A5
C23	F4	C131	*F3	IC47	*C2	R38	*D5
C24	B5	C132	C2	IC48	*C2	R39	*G4
C25	D5	C133	D2	IC49	*D2	R40	*G5
C26	*G4	C134	*D3	IC50	*F2	R41	*G4
C27	*G4	C135	*E2	IC51	*F2	R42	*G4
C28	*H3	C138	F2	IC60	*B1	R43	*G4
C29	*G3	C150	F2			R44	A4
C30	*H4	C152	F2	L1	A2	R45	B5
C31	*G4	C160	*E3			R46	D5
C32	B5	C161	*E4	Q1	H5	R47	*G5
C33	E5	C162	F4	Q2	G5	R48	*A5
C34	G3	C163	*F4	Q3	*E1	R49	*D5
C35	G4	C164	E4	Q4	*E1	R50	*G4
C36	H3	C200	*F2	Q5	*B1	R51	*G4
C37	H4	C201	B2	Q6	*H5	R52	*G5
C38	G3	C202	B2	Q7	H5	R53	A4
C39	H3	C203	D3	Q8	*G5	R54	*A5
C40	C5	C204	D2	Q9	*H4	R55	*D5
C41	C5	C205	*E3	Q10	*H4	R56	*A5
C42	F5	C206	*E3	Q11	*B5	R57	*D5
C43	F5	C207	E3	Q12	*E5	R58	*A5
C44	*B5	C208	E3	Q13	*H4	R59	*B5
C45	*E5	C209	E2	Q14	*H4	R60	B5
C46	A2			Q15	*B5	R61	*D5
C47	*G2	D1	*G4	Q16	*E5	R62	*D5
C48	*H2	D2	*H4	Q17	*G3	R63	E5
C49	*G2	D3	*G3	Q18	*G1	R64	*H3
C50	*H2	D4	*G3	Q19	*H3	R65	*H4
C51	*G1	D5	*H3	Q20	*H1	R66	*H4
C52	*H1	D6	*G3	Q21	F2	R67	*H4
C53	*G2	D7	*H3	Q22	*G2	R68	*A3
C54	G1	D8	*H3	Q23	*G2	R69	*B5
C55	H1	D9	*G2	Q24	*G2	R70	*B5
C56	G2	D10	*G2	Q25	*G2	R71	*B5
C57	G2	D11	*G2	Q26	G2	R72	*B5
C58	H2	D12	*G2	Q27	*H2	R73	*B5
C59	H2	D13	*H2	Q28	*H2	R74	*E5
C60	*H2	D14	*H2	Q29	*H2	R75	*E5
C61	*G2	D15	*H2	Q30	*H2	R76	*E5
C62	*H2	D16	*H2	Q31	*G3	R77	*E5
C63	*H1	D17	*G1	Q32	*H3	R78	*E5
C64	*G1	D18	*H1	Q33	*B3	R79	*H4
C65	*H1	D19	C4	Q34	*A4	R80	*A3
C66	*G1	D20	B4	Q35	*A4	R81	*A3
C67	*F4	D21	*C4	Q36	*A4	R82	*G3
C71	F3	D22	*C4	Q37	*A4	R83	*H4
C72	F3	D23	B3	Q38	*A2	R84	*H5
C73	C4	D24	B3	Q39	*B2	R85	A4
C74	F3	D25	B4	Q40	*A2	R86	*G4
C75	F3	D26	B4	Q41	*B2	R87	*G3
C76	*B4	D27	*A5	Q42	H5	R88	*H3
C77	*F3	D28	*A3	Q43	*H5	R89	*H4
C78	*F3	D40	G3	Q44	*B4	R90	*B5
C79	*B4			Q45	*F5	R91	*B5
C80	*B4	IC1	A2	Q46	G5	R92	*E5
C81	*C4	IC2	A3	Q50	*H3	R93	*E5
C82	*C4	IC3	A4	Q51	G3	R94	*B5
C83	*B4	IC4	*B5	Q52	*G4	R95	*E5
C84	*B4	IC5	*E5			R96	*G4
C85	*D4	IC6	*A4	R1	*H5	R97	*G4
C86	*E4	IC7	A4	R2	*H5	R98	*G3
C87	B4	IC8	*A3	R3	*H4	R99	*H4
C88	B4	IC9	*F3	R4	*E1	R100	*H3
C89	B4	IC10	*F2	R5	*E1	R101	*G3
C90	B4	IC11	*C5	R6	*E1	R102	*H3
C92	*F4	IC12	*E5	R7	*E1	R103	*G3
C93	B4	IC13	*A2	R8	*E1	R104	*H3
C94	B4	IC14	*C5	R9	*E1	R105	*G4
C95	*B3	IC15	*F5	R10	*E1	R106	*H4
C96	*B3	IC16	F2	R11	*A1	R107	*A4
C97	B3	IC17	*A2	R12	*A1	R108	*A4
C98	B3	IC18	G2	R13	*A1	R109	*A4
C99	*C4						

R110	*A4	R205	*A4	R300	*D4	RV2	D3
R111	*A3	R206	*D1	R301	*D3	RV3	F5
R112	*A3	R207	*B4	R302	*D3	RV4	D4
R113	*A3	R208	*B4	R303	*D3	RV5	F2
R114	*A3	R209	*B4	R304	*E3	RV8	F2
R115	*C5	R210	*B4	R305	*E3	RV9	E2
R116	*E5	R211	*D1	R306	*D3	RV10	F2
R117	*C5	R212	*G3	R307	*D3		
R118	*E5	R213	*G4	R308	*E3	S2	B5
R119	*C5	R214	*F4	R309	*E3	S3	D5
R120	*E5	R215	*D1	R310	*B1	S4	C5
R121	*G3	R216	*F4	R311	*D3	S5	E5
R122	*H3	R217	*D1	R312	*D3	S6	F4
R123	*G3	R218	*D1	R313	*D3	S7	F4
R124	*H3	R219	*D1	R314	*D3	S8	F4
R125	*A2	R220	*F4	R315	*D4	S9	F5
R126	*A2	R221	*D1	R316	*D4	S10	D3
R127	*A2	R222	*B4	R317	*D4	S11	D4
R128	*H5	R223	*B4	R318	*D3	S12	D3
R129	*G3	R224	*C4	R319	*D3	S13	D4
R130	*G2	R225	*D1	R320	*D3	S14	D2
R131	*G1	R226	*C4	R321	*E4	S15	E2
R132	*H3	R227	*D4	R322	*E4		
R133	*H2	R228	*B4	R323	*D2	TP1	D2
R134	*H2	R229	*B4	R324	*E3	TP2	F3
R135	*H2	R230	*E4	R325	*E2		
R136	*H2	R231	*E3	R326	*E2	W1	F2
R137	*H1	R232	F3	R327	*E2	W2	E2
R138	*G2	R233	*F4	R328	*B1	W1Z	A5
R139	*G2	R234	*E3	R329	*C1	W2Z	D5
R140	*G2	R235	*G4	R330	*F2		
R141	*G1	R236	*F3	R331	F3	*:B SIDE	
R142	*H1	R237	*G4	R332	F3		
R143	*A2	R238	*E3	R335	*F2		
R144	*C5	R239	*F4	R338	*F3		
R145	*F5	R240	*C4	R339	C2		
R146	*G3	R241	*B2	R340	C2		
R147	*H3	R242	*A3	R341	D2		
R148	*A2	R243	*B3	R342	C2		
R149	*G1	R244	*B2	R343	*D2		
R150	*H1	R245	*B3	R344	*D3		
R151	*G2	R246	*B3	R345	*E2		
R152	*G2	R247	*B3	R346	*F3		
R153	*G2	R248	*B3	R347	*C2		
R154	*G2	R249	*F4	R348	*C2		
R155	*H2	R250	*C4	R349	*D2		
R156	*H2	R251	*C4	R350	*E2		
R157	*H2	R252	*C4	R355	*C3		
R158	*H2	R253	*C4	R356	*C3		
R159	*A1	R254	*C4	R357	*D2		
R160	*G1	R255	*C4	R358	*E2		
R161	*H1	R256	*D4	R360	*F2		
R162	*A1	R257	*D3	R361	*C2		
R163	*A1	R258	*E3	R362	*C2		
R164	*A1	R259	*A1	R363	*D2		
R165	*C5	R260	*C3	R364	*E2		
R166	*G3	R261	*A3	R365	*E2		
R167	*H3	R262	*B3	R366	*F2		
R168	*C5	R263	*E4	R367	*F2		
R169	*F5	R264	*F5	R370	F2		
R170	*C5	R265	*D3	R372	*C1		
R171	*F5	R266	F4	R373	*C1		
R172	*F5	R267	F4	R374	*D2		
R173	*C5	R268	*F5	R375	*D2		
R174	*C5	R269	*F5	R376	*D2		
R175	*G2	R270	*D4	R377	*D2		
R176	*H2	R271	*B3	R378	*D2		
R177	*C5	R272	*B3	R379	*E2		
R178	*F5	R273	*D4	R380	*E2		
R179	*F5	R274	E4	R381	*E2		
R180	*H1	R275	*B3	R382	*F2		
R181	*F5	R276	*F5	R383	*F2		
R182	*G1	R277	*E4	R384	*F1		
R183	*H1	R278	*F3	R386	*C1		
R184	*G1	R279	*F3	R387	*C2		
R185	*H2	R280	*F3	R393	*F1		
R186	*F1	R281	*F3	R395	*F1		
R187	*G2	R282	*B3	R396	*C1		
R188	*H1	R283	E4	R397	*C1		
R189	*F1	R284	*C3	R398	*D2		
R190	*G1	R285	*C3	R399	*E2		
R191	*H1	R286	*E4	R405	*F1		
R192	*G1	R287	*F5	R407	*B1		
R193	*F1	R288	*D2	R409	*F1		
R194	*F1	R289	*D2	R410	*E3		
R195	*H1	R290	*F5	R411	F3		
R196	*G1	R291	*D4	R500	G4		
R197	*H1	R292	E3	R501	G4		
R198	*G1	R293	*F4	R502	*H4		
R199	F3	R294	*F5	R503	*H3		
R200	*B4	R295	*D4	R504	*B1		
R201	F3	R296	*D4	R507	*A1		
R202	*A4	R297	*F5	R508	*A1		
R203	*B4	R298	*E4	R610	G5		
R204	*B4	R299	*A2				
				RV1	F4		

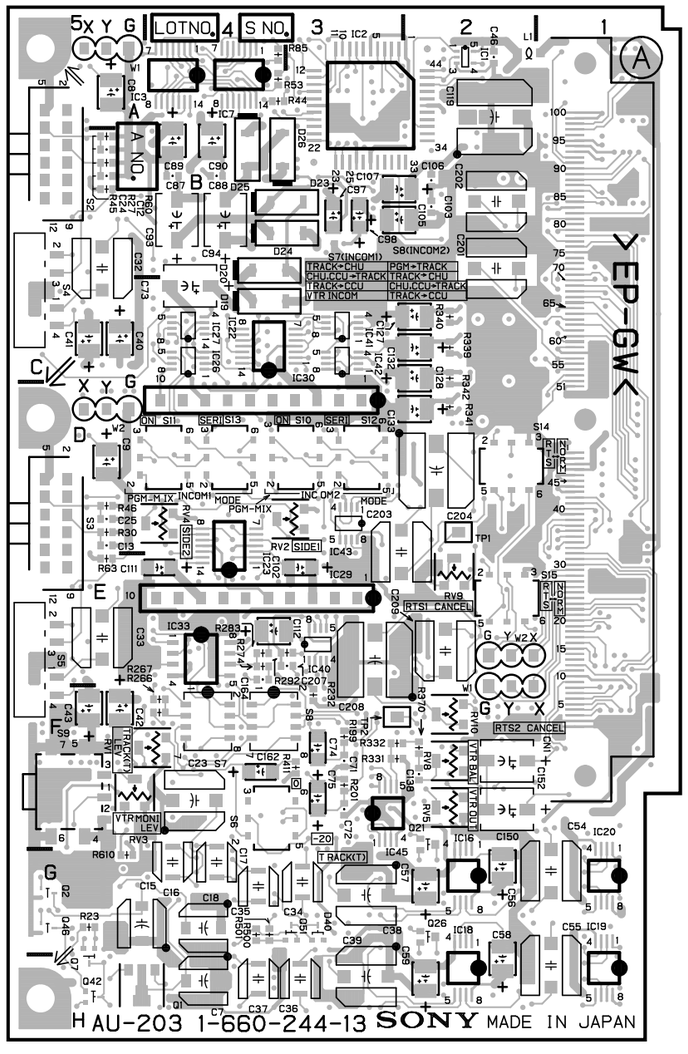

HDC-700 : S/N 10078 and Higher
HDCA-750 : S/N 10096 and Higher

AU-203 -A SIDE-
1-660-244-13

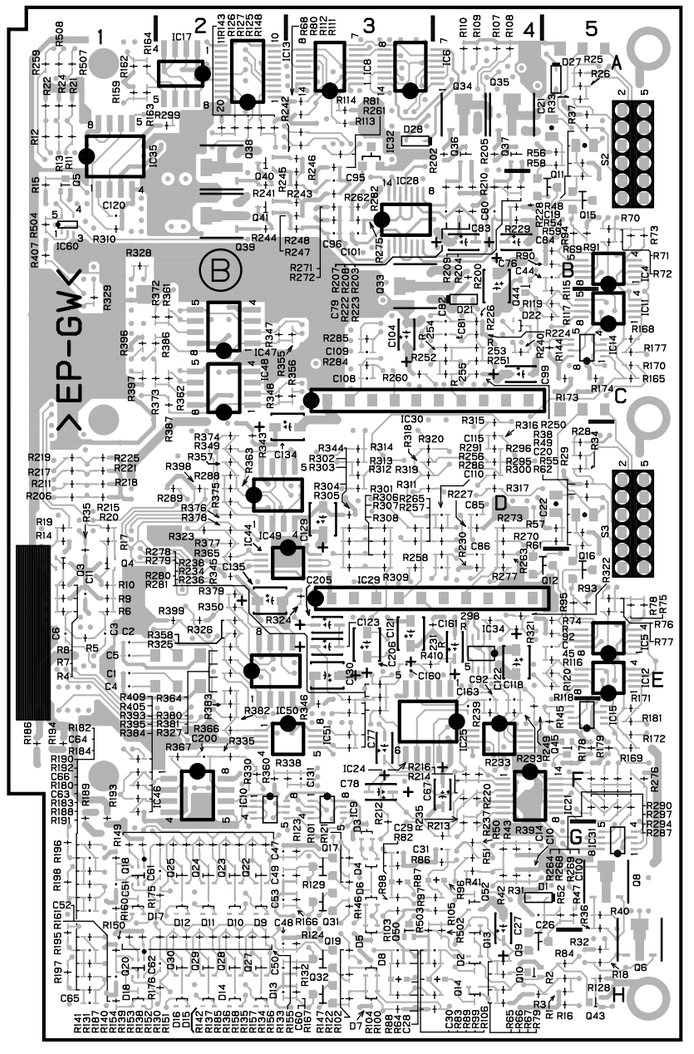

AU-203 -B SIDE-
1-660-244-13

http://getMANUAL.com

AU-203 (1-660-244-12)

CN1	D1	C106	B2	IC26	C4	R11	*A1
		C107	B3	IC27	C4	R12	*A1
C3	*E1	C108	*C3	IC28	*B3	R13	*A1
C6	*E1	C109	*C3	IC29	E3	R14	*D1
C7	H4	C110	*E4	IC30	D3	R15	*B1
C8	A5	C111	E4	IC31	*G5	R16	*H5
C9	D5	C112	E4	IC32	*A3	R17	*D1
C10	*G4	C115	*D4	IC33	E4	R18	*H5
C11	*E1	C118	*F4	IC34	*E4	R19	*D1
C12	B5	C119	A2	IC35	*B1	R20	*D1
C13	D5	C120	*B1	IC36	*F3	R21	*A1
C14	*G4	C121	*E3	IC37	*A4	R22	*A1
C15	G5	C122	*E4	IC40	E3	R23	*H5
C16	G4	C123	*E3	IC41	C3	R24	*A1
C17	G4	C127	C2	IC42	C3	R25	*A5
C18	G4	C128	C2	IC43	D3	R26	*A5
C19	*A5	C129	*D3	IC44	*E2	R27	B5
C20	*D5	C130	*E3	IC45	F3	R28	*D5
C21	*A5	C131	*F3	IC46	*F2	R29	*D5
C22	*D5	C132	C2	IC47	*C2	R30	D5
C23	F4	C133	D2	IC48	*C2	R31	*G4
C24	B5	C134	*D3	IC49	*D2	R32	*H5
C25	D5	C135	*E2	IC50	*F2	R33	*A5
C26	*G4	C138	F2	IC51	*F2	R34	*D5
C27	*G4	C150	F2	IC60	*B1	R35	*E1
C28	*H3	C152	F2			R36	*G5
C29	*G3	C160	*E3	L1	A2	R37	*A5
C30	*H4	C161	*E4			R38	*D5
C31	*G4	C162	F4	Q1	H5	R39	*G4
C32	B5	C163	*F4	Q2	*G5	R40	*G5
C33	E5	C164	E4	Q3	*E1	R41	*G4
C34	G3	C200	*F2	Q4	*E1	R42	*G4
C35	G4	C201	B2	Q5	*B1	R43	*G4
C36	H3	C202	B2	Q6	*H5	R44	A4
C37	H4	C203	D3	Q7	*H5	R45	B5
C38	G3	C204	D2	Q8	*G5	R46	D5
C39	H3	C205	*E3	Q9	*H4	R47	*G5
C40	C5	C206	*E3	Q10	*H4	R48	*A5
C41	C5	C207	E3	Q11	*B5	R49	*D5
C42	F5	C208	E3	Q12	*E5	R50	*G4
C43	F5	C209	E3	Q13	*H4	R51	*G4
C44	*B5			Q14	*H4	R52	*G5
C45	*E5	D1	*G4	Q15	*B5	R53	A4
C46	A2	D2	*H4	Q16	*E5	R54	*A5
C47	*G2	D3	*G3	Q17	*G3	R55	*D5
C48	*H2	D4	*G3	Q18	*G1	R56	*A5
C49	*G2	D5	*H3	Q19	*H3	R57	*D5
C50	*H2	D6	*G3	Q20	*H1	R58	*A5
C51	*G1	D7	*H3	Q21	F2	R59	*B5
C52	*H1	D8	*H3	Q22	*G2	R60	B5
C53	*G2	D9	*G2	Q23	*G2	R61	*D5
C54	G1	D10	*G2	Q24	*G2	R62	*D5
C55	H1	D11	*G2	Q25	*G2	R63	E5
C56	G2	D12	*G2	Q26	G2	R64	*H3
C57	G2	D13	*H2	Q27	*H2	R65	*H4
C58	H2	D14	*H2	Q28	*H2	R66	*H4
C59	H2	D15	*H2	Q29	*H2	R67	*H4
C60	*H2	D16	*H2	Q30	*H2	R68	*A3
C61	*G2	D17	*G1	Q31	*G3	R69	*B5
C62	*H2	D18	*H1	Q32	*H3	R70	*B5
C63	*H1	D19	C4	Q33	*B3	R71	*B5
C64	*G1	D20	B4	Q34	*A4	R72	*B5
C67	*F4	D21	*C4	Q35	*A4	R73	*B5
C71	F3	D22	*C4	Q36	*A4	R74	*E5
C72	F3	D23	B3	Q37	*A4	R75	*E5
C73	C4	D24	B3	Q38	*A2	R76	*E5
C74	F3	D25	B4	Q39	*B2	R77	*E5
C75	F3	D26	B4	Q40	*A2	R78	*E5
C76	*B4	D27	*A5	Q41	*B2	R79	*H4
C77	*F3	D28	*A3	Q42	H5	R80	*A3
C78	*F3	D40	G3	Q43	*H5	R81	*A3
C79	*B4			Q44	*B4	R82	*G3
C80	*B4	IC1	A2	Q45	*F5	R83	*H4
C81	*C4	IC2	A3	Q50	*H3	R84	*H5
C82	*C4	IC3	A4	Q51	G3	R85	A4
C83	*B4	IC4	*B5	Q52	*G4	R86	*G4
C84	*B4	IC5	*E5			R87	*G3
C85	*D4	IC6	*A4	RV1	F4	R88	*H3
C86	*E4	IC7	A4	RV2	D3	R89	*H4
C87	B4	IC8	*A3	RV3	F5	R90	*B5
C88	B4	IC9	*F3	RV4	D4	R91	*B5
C89	B4	IC10	*F2	RV5	F2	R92	*E5
C90	B4	IC11	*C5	RV7	F3	R93	*E5
C92	*F4	IC12	*E5	RV8	F2	R94	*B5
C93	B4	IC13	*A2	RV9	E2	R95	*E5
C94	B4	IC14	*C5	RV10	F2	R96	*G4
C95	*B3	IC15	*F5			R97	*G4
C96	*B3	IC16	G2	R1	*H5	R98	*G3
C97	B3	IC17	*A2	R2	*H5	R99	*H4
C98	B3	IC18	G2	R3	*H4	R100	*H3
C99	*C4	IC19	G1	R4	*E1	R101	*G3
C100	*F5	IC20	G1	R5	*E1	R102	*H3
C101	*B3	IC21	*F4	R6	*E1	R103	*G3
C102	E3	IC22	C3	R7	*E1	R104	*H3
C103	B2	IC23	E4	R8	*E1	R105	*G4
C104	*C3	IC24	*E4	R9	*E1	R106	*H4
C105	B3	IC25	*F4	R10	*E1	R107	*A4

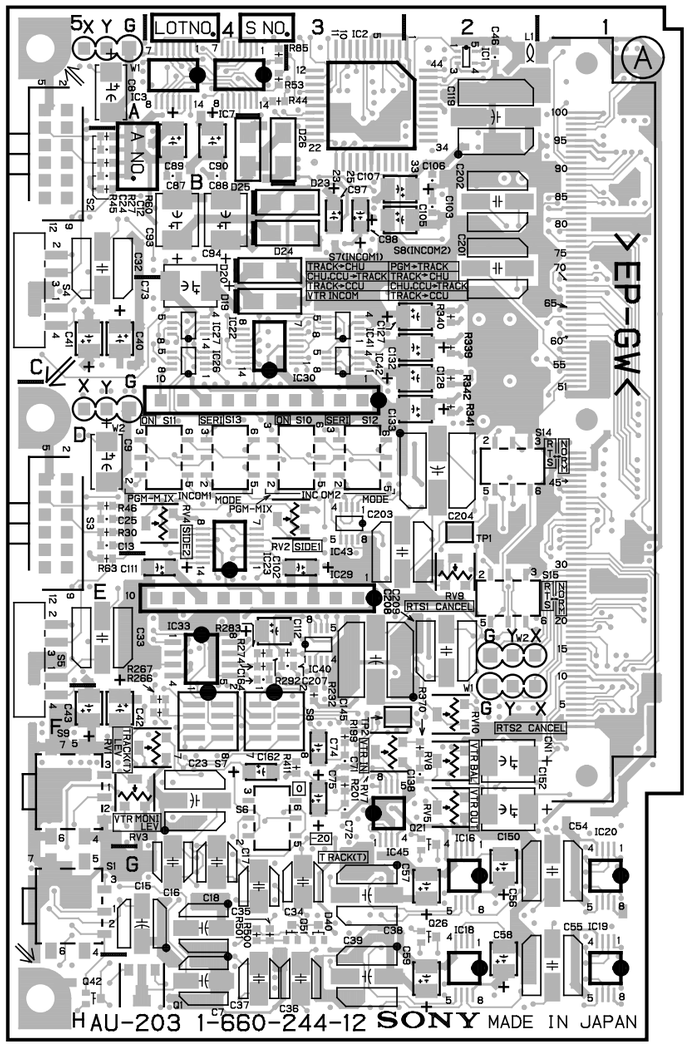

HDC-700 : S/N 10013 through 10077
HDCA-750 : S/N 10041 through 10095

AU-203 -A SIDE-
1-660-244-12

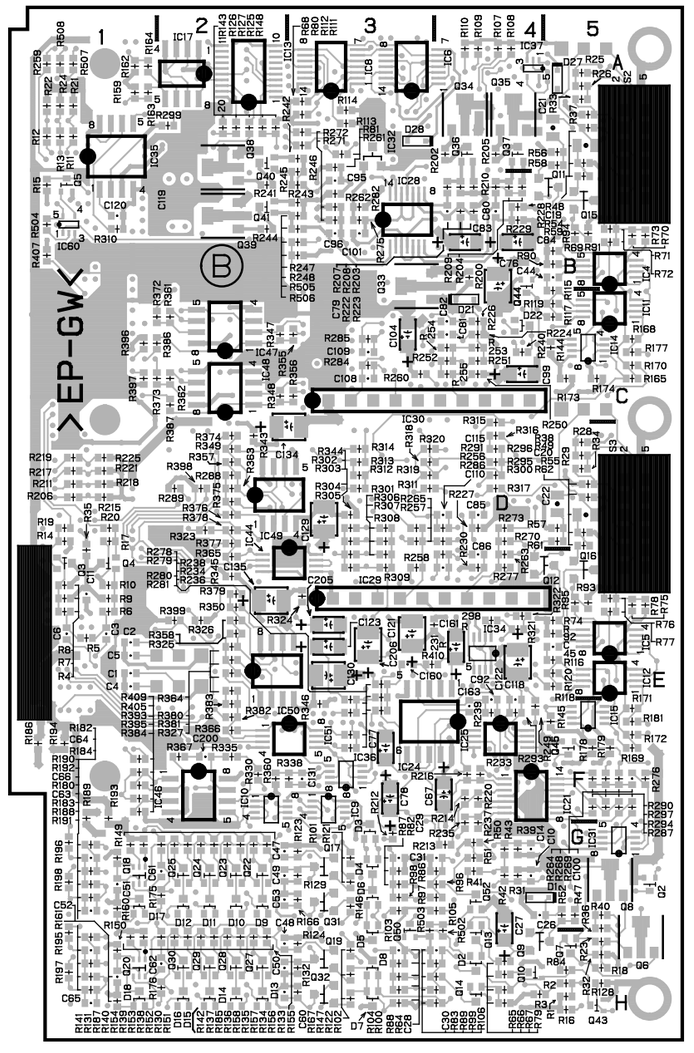

AU-203 -B SIDE-
1-660-244-12

R108	*A4	R205	*A4	R314	*D3		
R109	*A4	R206	*D1	R315	*D4		
R110	*A4	R207	*B4	R316	*D4		
R111	*A3	R208	*B4	R317	*D4		
R112	*A3	R209	*B4	R318	*D3		
R113	*A3	R210	*B4	R319	*D3		
R114	*A3	R211	*D1	R320	*D3		
R115	*C5	R212	*G3	R321	*E4		
R116	*E5	R213	*G4	R322	*E4		
R117	*C5	R214	*F4	R324	*E3		
R118	*E5	R215	*D1	R326	*E2		
R119	*C5	R216	*F4	R330	*F2		
R120	*E5	R217	*D1	R335	*F2		
R121	*G3	R218	*D1	R338	*F3		
R122	*H3	R219	*D1	R339	C2		
R123	*G3	R220	*F4	R340	C2		
R124	*H3	R221	*D1	R341	D2		
R125	*A2	R222	*B4	R342	C2		
R126	*A2	R223	*B4	R343	*D2		
R127	*A2	R224	*C4	R344	*D3		
R128	*H5	R225	*D1	R345	*E2		
R129	*G3	R226	*C4	R346	*F3		
R130	*G2	R227	*D4	R347	*C2		
R131	*G1	R228	*B4	R348	*C2		
R132	*H3	R229	*B4	R349	*D2		
R133	*H2	R230	*E4	R350	*E2		
R134	*H2	R231	*E3	R355	*C3		
R135	*H2	R232	F3	R356	*C3		
R136	*H2	R233	*F4	R357	*D2		
R137	*H1	R234	*E3	R358	*E2		
R138	*G2	R235	*G4	R360	*F2		
R139	*G2	R236	*F3	R361	*C2		
R140	*G2	R237	*G4	R362	*C2		
R141	*G1	R238	*E3	R363	*D2		
R142	*H1	R239	*F4	R364	*E2		
R143	*A2	R240	*C4	R365	*E2		
R144	*C5	R241	*B2	R366	*F2		
R145	*F5	R242	*A3	R367	*F2		
R146	*G3	R243	*B3	R370	F2		
R147	*H3	R244	*B2	R372	*C1		
R148	*A2	R245	*B3	R373	*C1		
R149	*G1	R246	*B3	R374	*D2		
R150	*H1	R247	*B3	R375	*D2		
R151	*G2	R248	*B3	R376	*D2		
R152	*G2	R249	*F4	R377	*D2		
R153	*G2	R250	*C4	R378	*D2		
R154	*G2	R251	*C4	R379	*E2		
R155	*H2	R253	*C4	R380	*E2		
R156	*H2	R256	*D4	R381	*E2		
R157	*H2	R257	*D3	R382	*F2		
R158	*H2	R258	*E3	R383	*F2		
R159	*A1	R259	*A1	R384	*F1		
R160	*G1	R260	*C3	R386	*C1		
R161	*H1	R261	*A3	R387	*C2		
R162	*A1	R262	*B3	R393	*F1		
R163	*A1	R263	*E4	R395	*F1		
R164	*A1	R264	*F5	R396	*C1		
R165	*C5	R265	*D3	R397	*C1		
R166	*G3	R266	F4	R398	*D2		
R167	*H3	R267	F4	R399	*E2		
R168	*C5	R268	*F5	R405	*F1		
R169	*F5	R269	*F5	R407	*B1		
R170	*C5	R270	*D4	R409	*F1		
R171	*F5	R271	*B3	R410	*E3		
R172	*F5	R272	*B3	R411	F3		
R173	*C5	R273	*D4	R500	G4		
R174	*C5	R274	E4	R501	G4		
R175	*G2	R275	*B3	R502	*H4		
R176	*H2	R276	*F5	R503	*H3		
R177	*C5	R277	*E4	R504	*B1		
R178	*F5	R278	*F3	R506	*B3		
R179	*F5	R279	*F3	R507	*A1		
R180	*H1	R280	*F3	R508	*A1		
R181	*F5	R281	*F3	R600	*E1		
R182	*G1	R282	*B3	R601	*E1		
R183	*H1	R283	E4				
R184	*G1	R284	*C3	S1	G5		
R185	*H2	R285	*C3	S2	B5		
R186	*F1	R286	*E4	S3	D5		
R187	*G2	R287	*F5	S4	C5		
R188	*H1	R289	*D2	S5	E5		
R189	*F1	R290	*F5	S6	F4		
R190	*G1	R291	*D4	S7	F4		
R191	*H1	R292	E3	S8	F4		
R192	*G1	R293	*F4	S9	F5		
R193	*F1	R294	*F5	S10	D3		
R194	*F1	R297	*F5	S11	D4		
R195	*H1	R298	*E4	S12	D3		
R196	*G1	R299	*A2	S13	D4		
R197	*H1	R302	*D3	S14	D2		
R198	*G1	R304	*E3	S15	E2		
R199	F3	R307	*D3				
R200	*B4	R309	*E3	TP1	D2		
R201	F3	R310	*B1	TP2	F3		
R202	*A4	R311	*D3				
R203	*B4	R312	*D3	*:B:SIDE			
R204	*B4	R313	*D3				

AU-203 (1-660-244-11)

CN1	D1	C106	B2	IC24	*E4
		C107	B3	IC25	*F4
C3	*E1	C108	*C3	IC26	C4
C6	*E1	C109	*C3	IC27	C4
C7	H4	C110	*E4	IC28	*B3
C8	A5	C111	E4	IC29	E3
C9	D5	C112	E4	IC30	D3
C10	*G4	C115	*D4	IC31	*G5
C11	*E1	C118	*E4	IC32	*A3
C12	B5	C119	*A2	IC33	E4
C13	D5	C120	*B1	IC34	*E4
C14	*G4	C121	*E3	IC35	*B1
C15	G5	C122	*E4	IC36	*F3
C16	G4	C123	*E3	IC37	*A4
C17	G4	C127	C2	IC40	E3
C18	G4	C128	C2	IC41	C3
C19	*A5	C129	*D3	IC42	C3
C20	*D5	C130	*E3	IC43	D3
C21	*A5	C131	*F3	IC44	*E2
C22	*D5	C132	C2	IC45	G3
C23	F4	C133	D2	IC46	*F2
C24	B5	C134	*D3	IC47	*C2
C25	D5	C135	*E2	IC48	*C2
C26	*G4	C138	F2	IC49	*D2
C27	*G4	C140	C2	IC50	*E2
C28	*H3	C141	D2	IC51	*F2
C29	*G3	C142	E2	IC60	*B1
C30	*H4	C143	D2		
C31	*G4	C144	E2	L1	A2
C32	B5	C145	E3		
C33	E5	C150	F2	Q1	H5
C34	G3	C152	F2	Q2	*G5
C35	G4	C160	*E3	Q3	*E1
C36	H3	C161	*E4	Q4	*E1
C37	H4	C162	F4	Q5	*B1
C38	G3	C163	*F4	Q6	*H5
C39	H3	C164	E4	Q7	*H5
C40	C5	C200	*F2	Q8	*G5
C41	C5	C201	A2	Q9	*H4
C42	F5	C202	B2	Q10	*H4
C43	F5	C203	B2	Q11	*B5
C44	*B5	C204	B2	Q12	*E5
C45	*E5	C205	*E3	Q13	*H4
C46	A2	C206	*E3	Q14	*H4
C47	*G2	C207	E3	Q15	*B5
C48	*H2			Q16	*E5
C49	*G2	D1	*G4	Q17	*G3
C50	*H2	D2	*H4	Q18	*G1
C51	*G1	D3	*G3	Q19	*H3
C52	*H1	D4	*G3	Q20	*H1
C53	*G2	D5	*H3	Q21	G2
C54	G1	D6	*G3	Q22	*G2
C55	H1	D7	*H3	Q23	*G2
C56	G2	D8	*H3	Q24	*G2
C57	G2	D9	*G2	Q25	*G2
C58	H2	D10	*G2	Q26	G2
C59	H2	D11	*G2	Q27	*H2
C60	*H2	D12	*G2	Q28	*H2
C61	*G2	D13	*H2	Q29	*H2
C62	*H2	D14	*H2	Q30	*H2
C63	*H1	D15	*H2	Q31	*G3
C64	*G1	D16	*H2	Q32	*H3
C67	*F4	D17	*G1	Q33	*B3
C71	F3	D18	*H1	Q34	*A4
C72	F3	D19	C3	Q35	*A4
C73	C4	D20	B3	Q36	*A4
C74	F3	D21	*C4	Q37	*A4
C75	F3	D22	*C4	Q38	*A2
C76	*B4	D23	B3	Q39	*B2
C77	*F3	D24	B3	Q40	*A2
C78	*F3	D25	B4	Q41	*B2
C79	*B4	D26	B4	Q42	H5
C80	*B4	D40	G3	Q43	*H5
C81	*C4			Q50	*H3
C82	*C4	IC1	A2	Q51	G3
C83	*B4	IC2	A3	Q52	*G4
C84	*B4	IC3	A4		
C85	*D4	IC4	*B5	RV1	F4
C86	*E4	IC5	*E5	RV2	D3
C87	B4	IC6	*A4	RV3	F5
C88	B4	IC7	A4	RV4	D4
C89	B4	IC8	*A3	RV5	F2
C90	B4	IC9	*F3	RV7	F3
C92	*E4	IC10	*F2	RV8	F2
C93	B4	IC11	*C5	RV9	E2
C94	B4	IC12	*E5	RV10	F2
C95	*B3	IC13	*A2		
C96	*B3	IC14	*C5	R1	*H5
C97	B3	IC15	*F5	R2	*H5
C98	B3	IC16	G2	R3	*H4
C99	*C4	IC17	*A2	R4	*E1
C100	*F5	IC18	G2	R5	*E1
C101	*B3	IC19	G1	R6	*E1
C102	E3	IC20	G1	R11	*A1
C103	B2	IC21	*F4	R12	*A1
C104	*C3	IC22	C3	R13	*A1
C105	B3	IC23	E4	R14	*D1

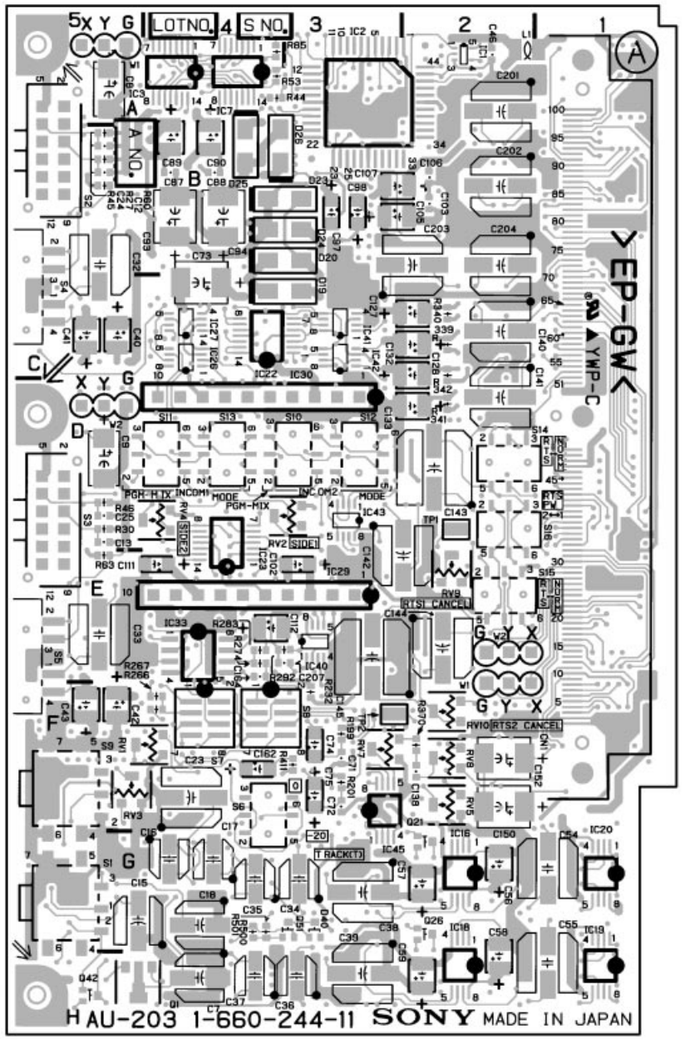

HDC-700 : S/N 10001 through 10012
HDCA-750 : S/N 10001 through 10040

AU-203 -A SIDE-
1-660-244-11

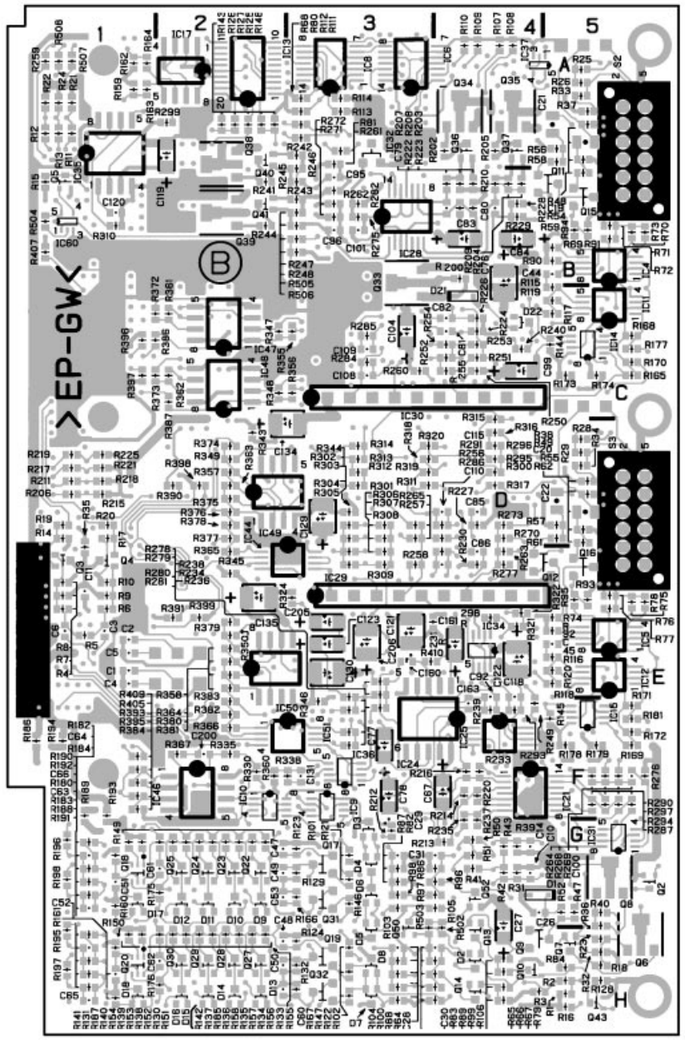

AU-203 -B SIDE-
1-660-244-11

R15	*B1	R112	*A3	R209	*B4
R16	*H5	R113	*A3	R210	*B4
R17	*D1	R114	*A3	R211	*D1
R18	*H5	R115	*C5	R212	*G3
R19	*D1	R116	*E5	R213	*G4
R20	*D1	R117	*C5	R214	*F4
R21	*A1	R118	*E5	R215	*D1
R22	*A1	R119	*C5	R216	*F4
R23	*H5	R120	*E5	R217	*D1
R24	*A1	R121	*G3	R218	*D1
R25	*A5	R122	*H3	R219	*D1
R26	*A5	R123	*G3	R220	*F4
R27	B5	R124	*H3	R221	*D1
R28	*D5	R125	*A2	R222	*B4
R29	*D5	R126	*A2	R223	*B4
R30	D5	R127	*A2	R224	*C4
R31	*G4	R128	*H5	R225	*D1
R32	*H5	R129	*G3	R226	*C4
R33	*A5	R130	*G2	R227	*D4
R34	*D5	R131	*G1	R228	*B4
R35	*E1	R132	*H3	R229	*B4
R36	*G5	R133	*H2	R230	*E4
R37	*A5	R134	*H2	R231	*E3
R38	*D5	R135	*H2	R232	F3
R39	*G4	R136	*H2	R233	*F4
R40	*G5	R137	*H1	R234	*E3
R41	*G4	R138	*G2	R235	*G4
R42	*G4	R139	*G2	R236	*F3
R43	*G4	R140	*G2	R237	*G4
R44	A4	R141	*G1	R238	*E3
R45	B5	R142	*H1	R239	*F4
R46	D5	R143	*A2	R240	*C4
R47	*G5	R144	*C5	R241	*B2
R48	*A5	R145	*F5	R242	*A3
R49	*D5	R146	*G3	R243	*B3
R50	*G4	R147	*H3	R244	*B2
R51	*G4	R148	*A2	R245	*B3
R52	*G5	R149	*G1	R246	*B3
R53	A4	R150	*H1	R247	*B3
R54	*A5	R151	*G2	R248	*B3
R55	*D5	R152	*G2	R249	*F4
R56	*A5	R153	*G2	R250	*C4
R57	*D5	R154	*G2	R251	*C4
R58	*A5	R155	*H2	R253	*C4
R59	*B5	R156	*H2	R256	*D4
R60	B5	R157	*H2	R257	*D3
R61	*D5	R158	*H2	R258	*E3
R62	*D5	R159	*A1	R259	*A1
R63	E5	R160	*G1	R260	*C3
R64	*H3	R161	*H1	R261	*A3
R65	*H4	R162	*A1	R262	*B3
R66	*H4	R163	*A1	R263	*E4
R67	*H4	R164	*A1	R264	*F5
R68	*A3	R165	*C5	R265	*D3
R69	*B5	R166	*G3	R266	F4
R70	*B5	R167	*H3	R267	F4
R71	*B5	R168	*C5	R268	*F5
R72	*B5	R169	*F5	R269	*F5
R73	*B5	R170	*C5	R270	*D4
R74	*E5	R171	*F5	R271	*B3
R75	*E5	R172	*F5	R272	*B3
R76	*E5	R173	*C5	R273	*D4
R77	*E5	R174	*C5	R274	E4
R78	*E5	R175	*G2	R275	*B3
R79	*H4	R176	*H2	R276	*F5
R80	*A3	R177	*C5	R277	*E4
R81	*A3	R178	*F5	R278	*E3
R82	*G3	R179	*F5	R279	*F3
R83	*H4	R180	*H1	R280	*F3
R84	*H5	R181	*F5	R281	*F3
R85	A4	R182	*G1	R282	*B3
R86	*G4	R183	*H1	R283	E4
R87	*G3	R184	*G1	R284	*C3
R88	*H3	R185	*H2	R285	*C3
R89	*H4	R186	*F1	R286	*E4
R90	*B5	R187	*G2	R287	*F5
R91	*B5	R188	*H1	R290	*F5
R92	*E5	R189	*F1	R291	*D4
R93	*E5	R190	*G1	R292	E3
R94	*B5	R191	*H1	R293	*F4
R95	*E5	R192	*G1	R294	*F5
R96	*G4	R193	*F1	R297	*F5
R97	*G4	R194	*F1	R298	*E4
R98	*G3	R195	*H1	R299	*A2
R99	*H4	R196	*G1	R302	*D3
R100	*H3	R197	*H1	R304	*E3
R101	*G3	R198	*G1	R307	*D3
R102	*H3	R199	F3	R309	*E3
R103	*G3	R200	*B4	R310	*B1
R104	*H3	R201	F3	R311	*D3
R105	*G4	R202	*A4	R312	*D3
R106	*H4	R203	*B4	R313	*D3
R107	*A4	R204	*B4	R314	*D3
R108	*A4	R205	*A4	R315	*D4
R109	*A4	R206	*D1	R316	*D4
R110	*A4	R207	*B4	R317	*D4
R111	*A3	R208	*B4	R318	*D3

R319	*D3				
R320	*D3				
R321	*E4				
R322	*E4				
R324	*E3				
R330	*F2				
R335	*F2				
R338	*F3				
R339	C2				
R340	C2				
R341	D2				
R342	C2				
R343	*D2				
R344	*D3				
R345	*E2				
R346	*F3				
R347	*C2				
R348	*C2				
R349	*D2				
R350	*E2				
R355	*C3				
R356	*C3				
R357	*D2				
R358	*E2				
R360	*F2				
R361	*C2				
R362	*C2				
R363	*D2				
R364	*E2				
R365	*E2				
R366	*F2				
R367	*F2				
R370	F2				
R372	*C1				
R373	*C1				
R374	*D2				
R375	*D2				
R376	*D2				
R377	*D2				
R378	*D2				
R379	*E2				
R380	*E2				
R381	*E2				
R382	*F2				
R383	*F1				
R386	*C1				
R387	*C2				
R390	*D2				
R391	*E2				
R393	*F1				
R395	*F1				
R396	*C1				
R397	*C1				
R398	*D2				
R399	*E2				
R405	*F1				
R407	*B1				
R409	*F1				
R410	*E3				
R411	F3				
R500	G4				
R501	G4				
R502	*H4				
R503	*H3				
R504	*B1				
R506	*B3				
R507	*A1				
R508	*A1				
S1	G5				
S2	B5				
S3	D5				
S4	C5				
S5	E5				
S6	F4				
S7	F4				
S8	F4				
S9	F5				
S10	D3				
S11	D4				
S12	D3				
S13	D4				
S14	D2				
S15	E2				
S16	D2				
TP1	D2				
TP2	F3				

*:B:SIDE

DAP-5 (1-660-245-12)

CNI36	F3	C90	*B5	C186	A2
		C91	*B4	C187	A4
CN1	D1	C92	*A4	C188	A3
		C93	*B3	C189	*B4
CP1	H3	C94	*B4	C190	*E1
CP2	H4	C95	*B4		
		C96	*B3	D1	*B1
C1	B3	C97	*B4	D2	*A4
C2	B2	C98	*B1	D3	*A5
C3	A3	C99	*B2	D4	F2
C4	C4	C100	*B3	D5	*D5
C5	C4	C101	*A4	D6	*E3
C6	A2	C102	*C1	D7	*A4
C7	A4	C103	*B3	D8	*A5
C8	A2	C104	*C4	D9	*E4
C9	C2	C105	*C4	D10	*E4
C10	C2	C106	*C2	D11	*E4
C11	A4	C107	*B4	D16	*E3
C12	A2	C108	*C2	D17	*E1
C13	B4	C109	*B2		
C14	B4	C110	*B4	E1	D3
C15	A4	C111	*B3	E2	G5
C16	B2	C112	*A4		
C17	A2	C113	*B3	IC1	B4
C18	B2	C114	*B1	IC2	B2
C19	B4	C115	*B4	IC3	A4
C20	B4	C116	*C4	IC4	A2
C21	B2	C117	*B4	IC5	C4
C22	B2	C118	*C4	IC6	C3
C23	B4	C119	*C1	IC7	*B1
C24	B4	C120	*A4	IC8	B5
C25	B2	C121	*C4	IC9	A5
C26	B3	C122	*B1	IC10	B3
C27	B4	C123	*C1	IC11	A3
C28	B2	C124	*C4	IC12	*C2
C29	B5	C125	*B4	IC13	*E2
C30	B4	C126	*C4	IC14	*A5
C31	A4	C127	*A2	IC15	*C4
C32	B3	C128	*G3	IC16	*B3
C33	A4	C129	*G2	IC17	*A2
C34	B3	C130	*G3	IC18	*C1
C35	A3	C131	*G2	IC19	*A4
C36	D2	C132	*G2	IC21	G3
C37	A5	C133	D4	IC22	*D5
C38	A3	C134	D4	IC23	*E4
C39	D3	C135	*D4	IC24	*F3
C40	B5	C136	D4	IC25	*E2
C41	C5	C137	D5	IC26	*D5
C42	C5	C138	*E5	IC27	*F2
C43	A3	C139	*D4	IC28	*F2
C44	B5	C140	E4	IC29	*E3
C45	A5	C141	*D4	IC30	*F4
C46	B5	C142	E4	IC31	*H3
C47	B5	C143	F5	IC32	*H2
C48	C2	C144	*D5	IC33	*G3
C49	C2	C145	*D4	IC34	H2
C50	C2	C146	*D4	IC35	G5
C51	C2	C147	*D4	IC36	F3
C52	C4	C148	F2	IC37	*F5
C53	C4	C149	*E4	IC38	*H4
C54	*D2	C150	*E4	IC39	E5
C55	*D2	C151	E4	IC40	*G2
C56	B3	C152	*E1	IC41	*A2
C57	A3	C153	D5	IC42	*B2
C58	B3	C154	F2	IC43	*A3
C59	B3	C155	*E5	IC44	*B3
C60	B3	C156	*F5		
C61	B5	C157	*E2	L1	C2
C62	B3	C158	*E5	L2	*D1
C63	*C2	C159	D5	L3	E2
C64	B5	C160	*D3	L4	*D4
C65	*D2	C161	B2	L5	*E4
C66	B3	C162	*C4		
C67	*B5	C163	E3	Q1	D2
C68	*C5	C164	E3	Q2	D2
C69	*C5	C165	E3	Q3	*C2
C70	*A2	C166	*F3	Q4	*C2
C71	*A3	C167	*G4	Q5	*D2
C72	*A5	C168	*H3	Q6	*D2
C73	E2	C169	*G4	Q8	*E2
C74	E2	C170	*H3	Q9	*E2
C75	E3	C171	*H3	Q13	E2
C76	E2	C172	*F3	Q14	E2
C77	*A3	C173	*G3	Q19	*E2
C78	*E2	C174	G5	Q20	*E2
C79	*E2	C175	*G5	Q21	F2
C80	*A4	C176	*H5	Q22	*E2
C81	E2	C177	F4	Q23	*E2
C82	*B5	C178	*G5	Q24	D3
C83	*A2	C179	*H4	Q25	*G3
C84	*A4	C180	*H5	Q26	*G4
C85	D2	C181	F5	Q27	*H1
C86	*A3	C182	*H2		
C87	*B5	C183	*H2	R1	B2
C88	*A3	C184	*G1	R2	A3
C89	*B4	C185	A3	R3	B4

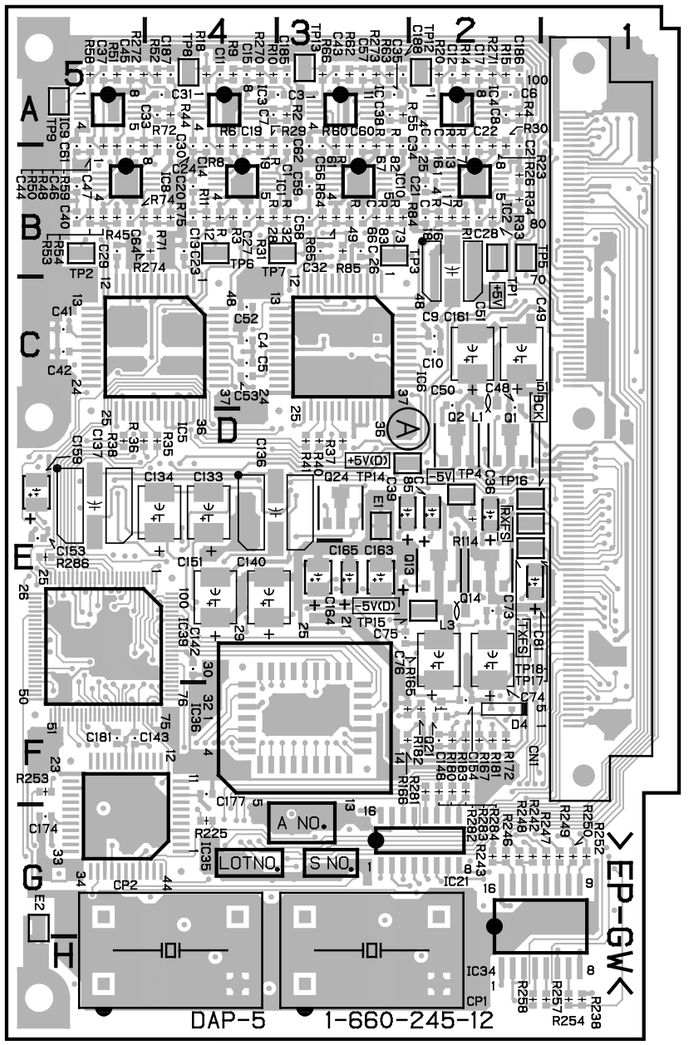

HDC-700 : S/N 10013 and Higher
HDCA-750 : S/N 10041 and Higher

DAP-5 -A SIDE-
1-660-245-12

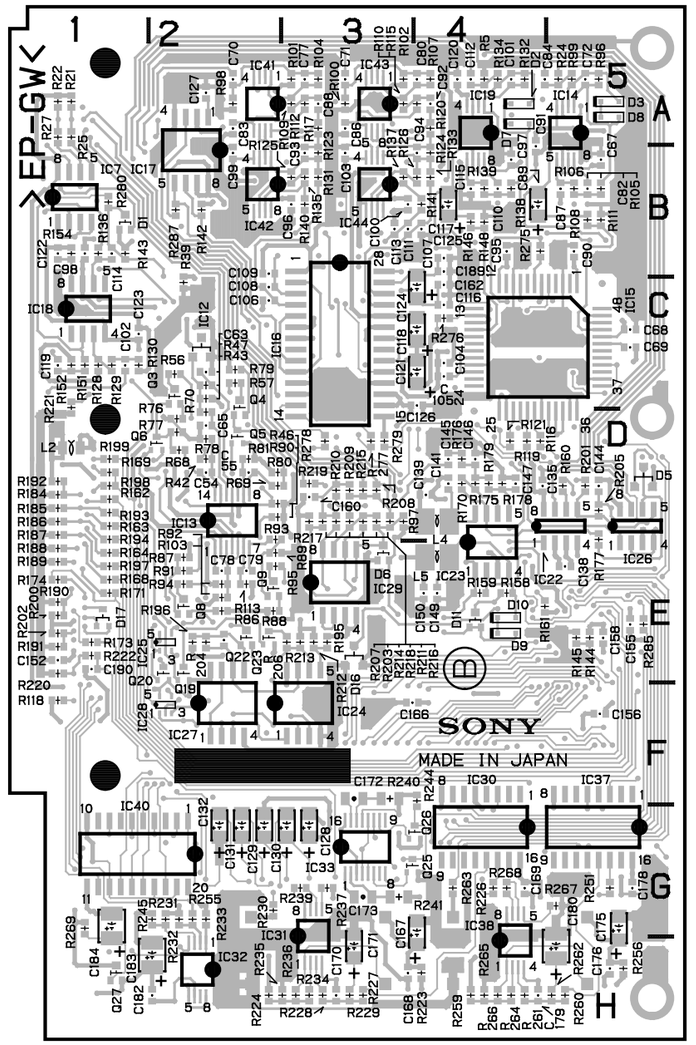

DAP-5 -B SIDE-
1-660-245-12

R4	A2	R100	*A3	R205	*D5
R5	*A4	R101	*A3	R206	*E3
R6	B4	R102	*A3	R207	*D3
R7	B2	R103	*E2	R208	*D3
R8	B4	R104	*A3	R209	*D3
R9	A4	R105	*B5	R210	*D3
R10	A4	R106	*B5	R211	*D3
R11	B4	R107	*A4	R212	*E3
R12	B4	R108	*B5	R213	*E3
R13	B2	R109	*A3	R214	*D3
R14	A2	R110	*A3	R215	*D3
R15	A2	R111	*B5	R216	*D3
R16	B2	R112	*A3	R217	*D3
R17	B2	R113	*E2	R218	*D3
R18	A4	R114	D2	R220	*E1
R19	B4	R115	*A4	R221	*C1
R20	A2	R116	*D4	R222	*E1
R21	*A1	R117	*A3	R223	*H4
R22	*A1	R118	*F1	R225	G4
R23	B2	R119	*D4	R226	*G4
R24	*A5	R120	*A4	R227	*H3
R25	*A1	R121	*D4	R228	*H3
R26	B2	R123	*B3	R229	*H3
R27	*A1	R124	*B4	R230	*G2
R28	B4	R125	*B3	R231	*G2
R29	B4	R126	*B4	R232	*G2
R30	B2	R128	*C1	R233	*G2
R31	B4	R129	*C1	R234	*H3
R32	B3	R130	*C1	R236	*H3
R33	B2	R131	*B3	R237	*G3
R34	B2	R132	*A4	R238	H1
R35	D4	R133	*B4	R239	*G3
R36	D5	R134	*A4	R240	*F3
R37	D3	R135	*B3	R241	*G3
R38	D5	R136	*B1	R242	G2
R39	*C2	R137	*B3	R243	G2
R40	D3	R138	*B4	R244	*F4
R41	D3	R139	*B4	R245	*G2
R42	*D2	R140	*B3	R246	G2
R43	*C2	R141	*B4	R247	G1
R44	A4	R142	*B2	R248	G2
R45	B5	R143	*B1	R249	G1
R46	*D2	R144	*E5	R250	G1
R47	*C2	R145	*E5	R251	*G5
R48	B5	R146	*B4	R252	G1
R49	B3	R148	*B4	R253	F5
R50	B5	R151	*C1	R254	H1
R51	A5	R152	*C1	R255	*G2
R52	A4	R154	*B1	R256	*H5
R53	B5	R158	*E4	R257	H1
R54	B5	R159	*E4	R258	H2
R55	A3	R160	*D5	R260	*H5
R56	*C2	R161	*E4	R261	*H4
R57	*C2	R162	*D1	R262	*H5
R58	A5	R163	*D1	R263	*G4
R59	B5	R164	*E1	R264	*H4
R60	B3	R165	F3	R266	*H4
R61	B3	R166	F3	R267	*G5
R62	A3	R167	F2	R268	*G4
R63	A3	R168	*E1	R269	*G1
R64	B3	R169	*D1	R270	A4
R65	B3	R170	*D4	R271	A2
R66	A3	R171	*E1	R272	A5
R67	B3	R172	F2	R273	A3
R68	*D2	R173	*E1	R274	B4
R69	*D2	R174	*E1	R275	*B4
R70	*D2	R175	*D4	R276	*C4
R71	B4	R176	*D4	R277	*D3
R72	B4	R177	*D5	R278	*D3
R73	B3	R178	*D4	R279	*D3
R74	B5	R179	*D4	R280	*B1
R75	B4	R180	F2	R281	F2
R76	*D2	R181	F2	R282	F2
R77	*D2	R182	F2	R283	F2
R78	*D2	R183	F2	R284	F2
R79	*C2	R184	*D1	R285	*E5
R80	*D2	R185	*D1	R286	E5
R81	*D2	R186	*D1	R287	*B2
R82	B3	R187	*D1		
R83	B3	R188	*E1	TP1	B2
R84	B3	R189	*E1	TP2	B5
R85	B3	R190	*E1	TP3	B3
R86	*E2	R191	*E1	TP4	D2
R87	*E2	R192	*D1	TP5	B2
R88	*E2	R193	*D1	TP6	B4
R89	*E2	R194	*D1	TP7	B3
R90	*D2	R195	*E3	TP8	A4
R91	*E2	R196	*E2	TP9	A5
R92	*E2	R197	*E1	TP12	A2
R93	*D2	R198	*D1	TP13	A3
R94	*E2	R199	*D1	TP14	D3
R95	*E2	R200	*E1	TP15	E2
R96	*A5	R201	*D5	TP16	D2
R97	*D3	R202	*E1	TP17	E2
R98	*A2	R203	*D3	TP18	D2
R99	*A5	R204	*E2		

*:B SIDE

DAP-5 (1-660-245-11)

CNI1	F3	C91	*B4	C188	A3
		C92	*A4	C189	*B4
CN1	D1	C93	*B3		
		C94	*B4	D1	*B1
CP1	H3	C95	*B4	D2	*A4
CP2	H4	C96	*B3	D3	*A5
		C97	*B4	D4	F2
C1	B3	C98	*B1	D5	*D5
C2	B2	C99	*B2	D6	*E3
C3	A3	C100	*B3	D7	*A4
C4	C4	C101	*A4	D8	*A5
C5	C4	C102	*C1	D9	*E4
C6	A2	C103	*B3	D10	*E4
C7	A4	C104	*C4	D11	*E4
C8	A2	C105	*C4	D16	*E3
C9	C2	C106	*C2		
C10	C2	C107	*B4	E1	D3
C11	A4	C108	*C2	E2	G5
C12	A2	C109	*B2		
C13	B4	C110	*B4	IC1	B4
C14	B4	C111	*B3	IC2	B2
C15	A4	C112	*A4	IC3	A4
C16	B2	C113	*B3	IC4	A2
C17	A2	C114	*B1	IC5	C4
C18	B2	C115	*B4	IC6	C3
C19	B4	C116	*C4	IC7	*B1
C20	B4	C117	*B4	IC8	B5
C21	B2	C118	*C4	IC9	A5
C22	B2	C119	*C1	IC10	B3
C23	B4	C120	*A4	IC11	A3
C24	B4	C121	*C4	IC12	*C2
C25	B2	C122	*B1	IC13	*E2
C26	B3	C123	*C1	IC14	*A5
C27	B4	C124	*C4	IC15	*C4
C28	B2	C125	*B4	IC16	*B3
C29	B5	C126	*C4	IC17	*A2
C30	B4	C127	*A2	IC18	*C1
C31	A4	C128	*G3	IC19	*A4
C32	B3	C129	*G2	IC21	G3
C33	A4	C130	*G3	IC22	*D5
C34	B3	C131	*G2	IC23	*E4
C35	A3	C132	*G2	IC24	*F3
C36	D2	C133	D4	IC25	*E2
C37	A5	C134	D4	IC26	*D5
C38	A3	C135	*D4	IC27	*F2
C39	D3	C136	D4	IC28	*F2
C40	B5	C137	D5	IC29	*E3
C41	C5	C138	*E5	IC30	*F4
C42	C5	C139	*D4	IC31	*H3
C43	A3	C140	E4	IC32	*H2
C44	B5	C141	*D4	IC33	*G3
C45	A5	C142	E4	IC34	H2
C46	B5	C143	F5	IC35	G5
C47	B5	C144	*D5	IC36	F3
C48	C2	C145	*D4	IC37	*F5
C49	C2	C146	*D4	IC38	*H4
C50	C2	C147	*D4	IC39	E5
C51	C2	C148	F2	IC40	*G2
C52	C4	C149	*E4	IC41	*A2
C53	C4	C150	*E4	IC42	*B2
C54	*D2	C151	E4	IC43	*A3
C55	*D2	C152	*E1	IC44	*B3
C56	B3	C153	*E5		
C57	A3	C154	F2	L1	C2
C58	B3	C155	*E5	L2	*D1
C59	B3	C156	*F5	L3	E2
C60	B3	C157	*E2	L4	*D4
C61	B5	C158	*E5	L5	*E4
C62	B3	C159	D5		
C63	*C2	C160	*D3	Q1	D2
C64	B5	C161	B2	Q2	D2
C65	*D2	C162	*C4	Q3	*C2
C66	B3	C163	E3	Q4	*C2
C67	*B5	C164	E3	Q5	*D2
C68	*C5	C165	E3	Q6	*D2
C69	*C5	C166	*F3	Q8	*E2
C70	*A2	C167	*G4	Q9	*E2
C71	*A3	C168	*H3	Q13	E2
C72	*A5	C169	*G4	Q14	E2
C73	E2	C170	*H3	Q19	*F2
C74	E2	C171	*H3	Q20	*F2
C75	E3	C172	*F3	Q21	F2
C76	E2	C173	*G3	Q22	*E2
C77	*A3	C174	G5	Q23	*E2
C78	*E2	C175	*G5	Q24	D3
C79	*E2	C176	*H5	Q25	*G3
C80	*A4	C177	F4	Q26	*G4
C81	E2	C178	*G5	Q27	*H1
C82	*B5	C179	*H4		
C83	*A2	C180	*H5	R1	B2
C84	*A4	C181	F5	R2	A3
C85	D2	C182	*H2	R3	B4
C86	*A3	C183	*H2	R4	A2
C87	*B5	C184	*G1	R5	*A4
C88	*A3	C185	A3	R6	B4
C89	*B4	C186	A2	R7	B2
C90	*B5	C187	A4	R8	B4

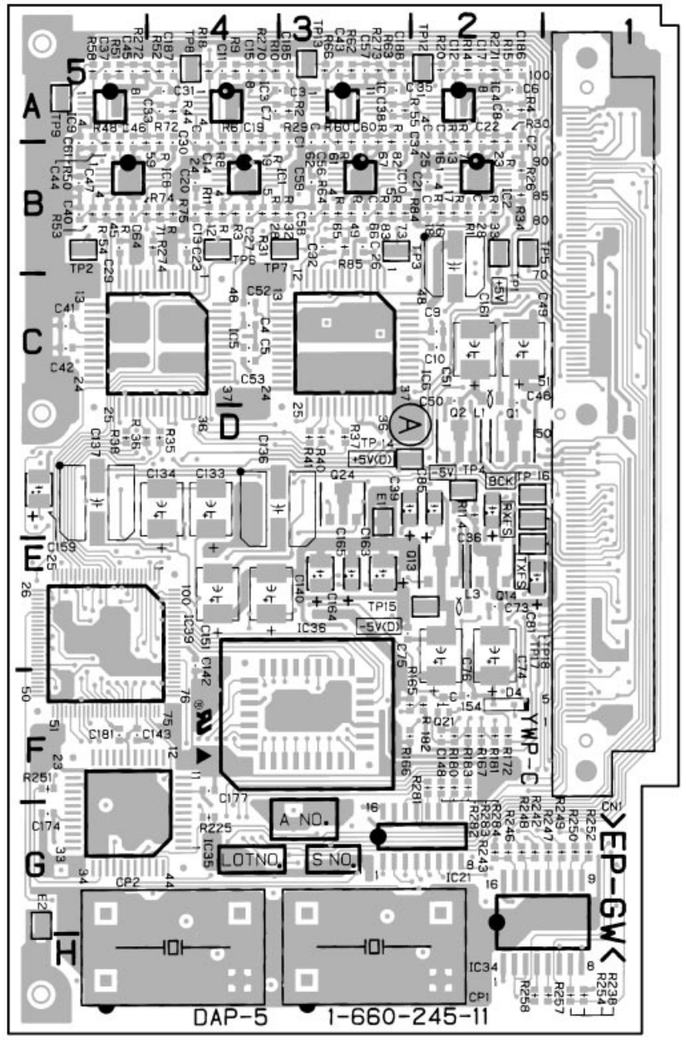

HDC-700 : S/N 10001 through 10012
HDCA-750 : S/N 10001 through 10040

DAP-5 -A SIDE-
1-660-245-11

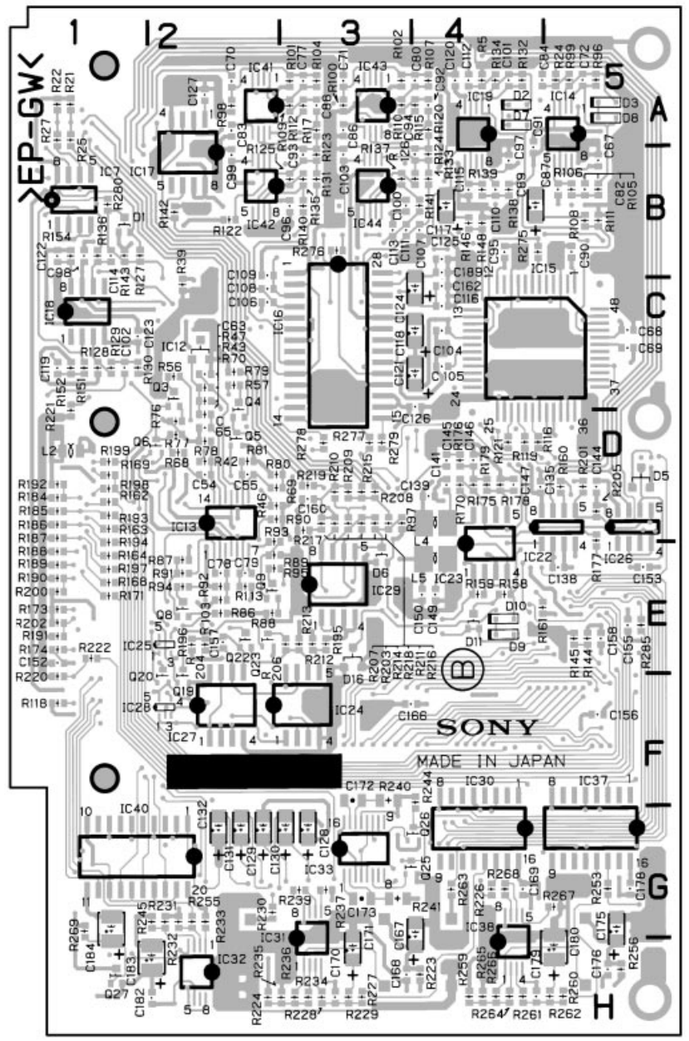

DAP-5 -B SIDE-
1-660-245-11

R9	A4	R106	*B5	R210	*D3
R10	A4	R107	*A4	R211	*D3
R11	B4	R108	*B5	R212	*E3
R12	B4	R109	*A3	R213	*E3
R13	B2	R110	*A3	R214	*D3
R14	A2	R111	*B5	R215	*D3
R15	A2	R112	*A3	R216	*D3
R16	B2	R113	*E2	R217	*D3
R17	B2	R114	D2	R218	*D3
R18	A4	R115	*A4	R219	*D3
R19	B4	R116	*D4	R220	*F1
R20	A2	R117	*A3	R221	*C1
R21	*A1	R118	*F1	R222	*E1
R22	*A1	R119	*D4	R223	*H4
R23	B2	R120	*A4	R224	*H2
R24	*A5	R121	*D4	R225	G4
R25	*A1	R122	*B2	R226	*G4
R26	B2	R123	*B3	R227	*H3
R27	*A1	R124	*B4	R228	*H3
R28	B4	R125	*B3	R229	*H3
R29	B4	R126	*B4	R230	*G2
R30	B2	R127	*B1	R231	*G2
R31	B4	R128	*C1	R232	*G2
R32	B3	R129	*C1	R233	*G2
R33	B2	R130	*C1	R234	*H3
R34	B2	R131	*B3	R235	*H3
R35	D4	R132	*A4	R236	*H3
R36	D5	R133	*B4	R237	*G3
R37	D3	R134	*A4	R238	H1
R38	D5	R135	*B3	R239	*G3
R39	*C2	R136	*B1	R240	*F3
R40	D3	R137	*B3	R241	*G3
R41	D3	R138	*B4	R242	G2
R42	*D2	R139	*B4	R243	G2
R43	*C2	R140	*B3	R244	*F4
R44	A4	R141	*B4	R245	*G2
R45	B5	R142	*B2	R246	G2
R46	*D2	R143	*B1	R247	G1
R47	*C2	R144	*E5	R248	G2
R48	B5	R145	*E5	R249	G1
R49	B3	R146	*B4	R250	G1
R50	B5	R148	*B4	R251	F5
R51	A5	R151	*C1	R252	G1
R52	A4	R152	*C1	R253	*G5
R53	B5	R154	*B1	R254	H1
R54	B5	R158	*E4	R255	*G2
R55	A3	R159	*E4	R256	*H5
R56	*C2	R160	*D5	R257	H1
R57	*C2	R161	*E4	R258	H2
R58	A5	R162	*D1	R259	*H4
R59	B5	R163	*D1	R260	*H5
R60	B3	R164	*E1	R261	*H4
R61	B3	R165	F3	R262	*H5
R62	A3	R166	F3	R263	*G4
R63	A3	R167	F2	R264	*H4
R64	B3	R168	*E1	R265	*H4
R65	B3	R169	*D1	R266	*H4
R66	A3	R170	*D4	R267	*G5
R67	B3	R171	*E1	R268	*G4
R68	*D2	R172	F2	R269	*G1
R69	*D2	R173	*E1	R270	A4
R70	*D2	R174	*E1	R271	A2
R71	B4	R175	*D4	R272	A5
R72	B4	R176	*D4	R273	A3
R73	B3	R177	*D5	R274	B4
R74	B5	R178	*D4	R275	*B4
R75	B4	R179	*D4	R276	*B3
R76	*D2	R180	F2	R277	*D3
R77	*D2	R181	F2	R278	*D3
R78	*D2	R182	F2	R279	*D3
R79	*C2	R183	F2	R280	*B1
R80	*D2	R184	*D1	R281	F2
R81	*D2	R185	*D1	R282	F2
R82	B3	R186	*D1	R283	F2
R83	B3	R187	*D1	R284	F2
R84	B3	R188	*E1	R285	*E5
R85	B3	R189	*E1		
R86	*E2	R190	*E1	TP1	B2
R87	*E2	R191	*E1	TP2	B5
R88	*E2	R192	*D1	TP3	B3
R89	*E2	R193	*D1	TP4	D2
R90	*D2	R194	*D1	TP5	B2
R91	*E2	R195	*E3	TP6	B4
R92	*E2	R196	*E2	TP7	B3
R93	*D2	R197	*E1	TP8	A4
R94	*E2	R198	*D1	TP9	A5
R95	*E2	R199	*D1	TP12	A2
R96	*A5	R200	*E1	TP13	A3
R97	*D3	R201	*D5	TP14	D3
R98	*A2	R202	*E1	TP15	E2
R99	*A5	R203	*D3	TP16	D2
R100	*A3	R204	*E2	TP17	E2
R101	*A3	R205	*D5	TP18	D2
R102	*A3	R206	*E3		
R103	*E2	R207	*D3	*:B SIDE	
R104	*A3	R208	*D3		
R105	*B5	R209	*D3		

SG-226 HDC-700/HDCA-750

SG-226 (1-660-246-14)

CNI24	B5	C95	*B2	L7	A5
		C96	*B2		
CN1	C2	C97	A2	PH1	*C5
		C98	*B2	PH2	*C5
CV2	A4	C99	A1	PH3	*C4
		C100	*A2	PH4	*C4
C1	*A5	C101	*A2	PH5	*C4
C2	*A5	C102	*A2	PH6	*C3
C3	*B3	C103	*A2		
C4	*C2	C104	A2	Q1	C3
C5	*C3	C105	*A3	Q2	C3
C6	A5	C106	*A2	Q3	C3
C7	*A3	C107	*A2	Q4	C3
C8	*A3	C108	*C2	Q5	C3
C9	*B5	C109	*A2	Q6	C3
C10	A3	C110	*C2	Q9	*C3
C11	*A4	C111	*A2	Q10	*C3
C12	*A4	C112	*C2	Q11	*C1
C14	*A4	C113	*C2	Q12	*C1
C15	*A3	C114	*C2	Q13	*C1
C16	*C3	C115	*C3	Q14	*C1
C17	*B3	C116	*C2	Q15	*C1
C18	B3	C202	A4	Q16	*B2
C19	*A4	C204	*A4	Q17	*A1
C20	*C3			Q18	*B1
C21	*C3	D1	*C2	Q19	*A2
C22	*A4	D2	*C3	Q20	*A2
C23	*B3	D3	A5	Q23	*C4
C24	*B3	D4	*C3	Q24	*C4
C25	B3	D5	*C2	Q30	C4
C26	B3	D6	*B4		
C27	*B3	D7	*C5	R1	*A5
C30	*A4	D8	*C4	R2	*A5
C31	*A5	D9	*C3	R3	*A3
C32	B4	D10	*C1	R4	*A3
C33	*B5	D11	*C1	R5	*A3
C34	*B3			R6	*C2
C35	*B4	E1	C3	R7	*C3
C36	*B5	E2	C1	R8	*C2
C37	*B4			R9	*C2
C38	*B4	IC3	B3	R10	*A5
C39	*B5	IC4	*C3	R11	*A4
C40	*B4	IC5	C5	R12	*A4
C41	*B4	IC6	*B5	R13	*A4
C42	C4	IC7	*B5	R14	*A3
C43	*B5	IC8	C5	R15	*A4
C44	*B5	IC9	*A3	R16	*A4
C45	*B4	IC10	A4	R17	*A4
C46	*B4	IC11	C3	R18	*A4
C47	*B3	IC12	*B5	R19	*A4
C48	*B4	IC13	B3	R20	*C4
C49	*C5	IC14	B5	R21	*C3
C50	*C5	IC15	*A5	R22	*C3
C51	*C4	IC16	*A5	R23	*C3
C52	*C3	IC17	*C4	R24	*C3
C53	*C5	IC18	C5	R25	*C3
C54	*C4	IC19	*A3	R26	*C3
C55	*C2	IC20	*A4	R27	*C3
C56	*C2	IC21	*A4	R28	*A4
C57	*B2	IC22	*B4	R29	*C4
C58	C2	IC23	B4	R30	*B4
C59	*B2	IC34	A3	R31	*C1
C60	*B2	IC35	*B3	R32	*A4
C61	*C1	IC37	B3	R33	*B3
C62	C2	IC38	*C2	R34	*C3
C63	*B2	IC39	*C2	R35	*C3
C64	*B2	IC40	*C1	R36	*C1
C65	*C2	IC42	*B3	R37	*C3
C66	*B1	IC45	*B1	R38	*C3
C67	*B2	IC46	*C2	R39	*C4
C68	*C1	IC47	*B2	R40	*C2
C69	C2	IC48	C1	R41	*C3
C70	*C1	IC49	*C1	R42	*C3
C71	C1	IC50	*B4	R43	*C2
C72	C1	IC51	*B2	R44	*B3
C73	*C1	IC52	*A1	R45	*B3
C74	*C1	IC53	*A2	R46	*B4
C75	*C1	IC54	*A2	R47	*C2
C76	*C1	IC55	*A2	R48	*C2
C77	*C1	IC56	*B1	R49	*B3
C78	*B1	IC57	*A1	R50	*B3
C79	*C1	IC58	*B1	R51	*B3
C80	C1	IC59	B2	R52	*B3
C81	C1	IC60	C2	R53	*B3
C82	*B2	IC61	*A3	R54	*C3
C83	*C1	IC62	*C1	R55	*C3
C84	C1	IC63	*A4	R56	*C3
C85	*B2	IC64	*A4	R57	*C3
C86	*A1	IC65	B2	R58	*B3
C87	*A1	IC66	*B2	R59	*B3
C88	*B1	IC67	*B2	R60	*B3
C89	*B1	IC69	A4	R61	*B3
C90	*B2	IC71	*B3	R62	*C3
C91	*A2			R63	*C3
C92	*B1	L4	C4	R64	*C3
C93	*A2	L5	*A1	R65	*A3
C94	*A1	L6	*B1	R66	*B3

R67	*B3	R164	*A2
R68	*B3	R165	*B2
R69	*B3	R166	*B2
R70	*B3	R167	*B2
R71	*C3	R168	*B2
R72	*C4	R169	*B2
R73	*C4	R170	*B2
R74	*C5	R171	*B2
R75	*C4	R172	*B2
R76	*B5	R173	*B2
R77	*B4	R174	*B2
R78	*B4	R175	*B2
R79	*B5	R176	*B2
R80	*B5	R177	*B2
R81	*B4	R178	*A2
R82	*B4	R179	*A2
R83	*B3	R180	*B2
R84	*B4	R181	*A2
R85	*C5	R182	*A2
R86	*C5	R183	*A2
R87	*C5	R184	*A2
R88	*C5	R185	*A2
R89	*C5	R186	*A2
R90	*C5	R187	A2
R91	*C5	R188	*A1
R92	*C4	R189	*A1
R93	*C4	R190	A1
R94	C2	R191	*A2
R95	C2	R192	*A2
R96	C2	R193	*A2
R97	B2	R194	*A2
R98	C2	R195	*A2
R99	C2	R196	*A2
R100	*C3	R197	*A2
R101	*C3	R198	A1
R102	*C4	R199	*A2
R103	*B2	R200	*A2
R104	*C2	R201	*A2
R105	*C4	R202	*A2
R106	*C4	R203	A2
R107	C2	R204	A2
R108	C2	R205	A2
R109	*B2	R206	A2
R110	*C2	R207	*A2
R111	B2	R208	*C2
R112	*B2	R209	A2
R113	*B2	R210	A2
R114	*B2	R211	*A2
R115	*C2	R212	A2
R116	*C2	R213	*A2
R117	*C2	R214	*C3
R118	*C2	R215	*A2
R119	*C2	R216	*C2
R120	*C2	R217	*C2
R121	*C2	R218	*C3
R122	*B1	R219	*C2
R123	*B1	R400	C2
R124	*B1	R402	*C4
R125	*C2	R403	A2
R126	*B1	R404	B2
R127	*C1	R405	B2
R128	C1	R406	*A4
R129	C1	R407	*A4
R130	*C1	R408	*A2
R131	*C1		
R132	*C1	RB1	*A3
R133	*C1	RB2	*A4
R134	*C1	RB3	*B4
R135	*C1	RB6	B4
R136	*C1	RB7	*C2
R137	*C2	RB8	*C1
R138	*C1		
R139	*C1	S1	A5
R140	*B1	S2	B4
R141	*B1		
R142	*C1	X1	A3
R143	*C1	X2	A1
R144	*C1	X3	B1
R145	*C1		
R146	*C1	*:B SIDE	
R147	C1		
R148	*C1		
R149	*C1		
R150	C1		
R151	*B2		
R152	*B1		
R153	*A1		
R154	*B1		
R155	*A1		
R156	*A1		
R157	*B1		
R158	*B1		
R159	*B1		
R160	*B1		
R161	*B1		
R162	*B1		
R163	*A2		

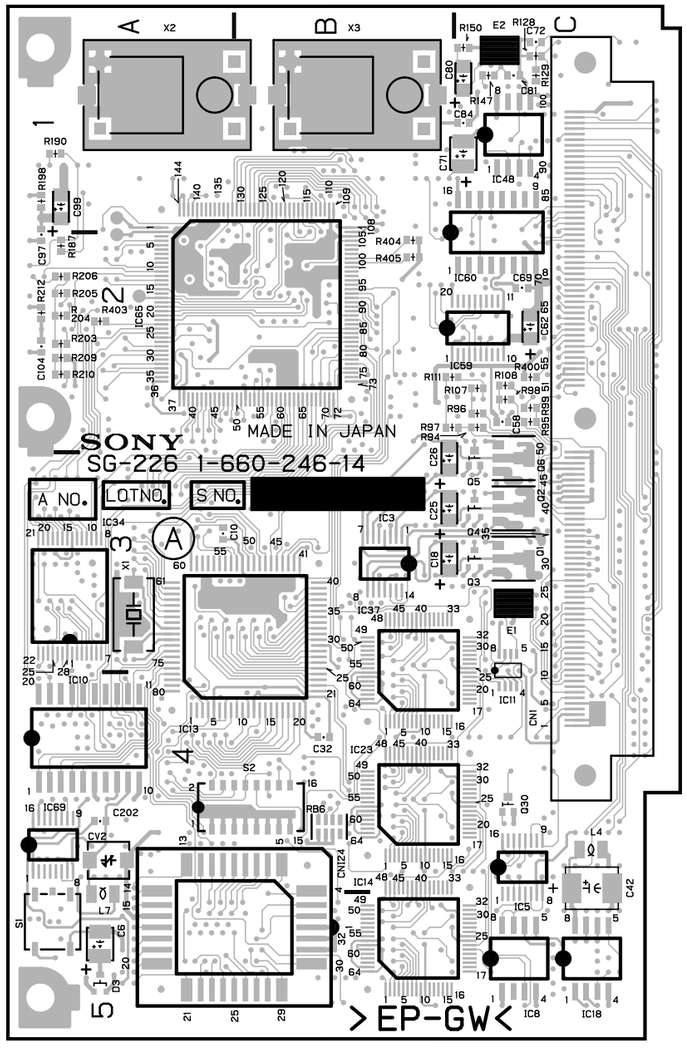

HDC-700 : S/N 11001 and Higher, 13001 and Higher
HDCA-750 : S/N 11001 and Higher

SG-226 -A SIDE-
1-660-246-14

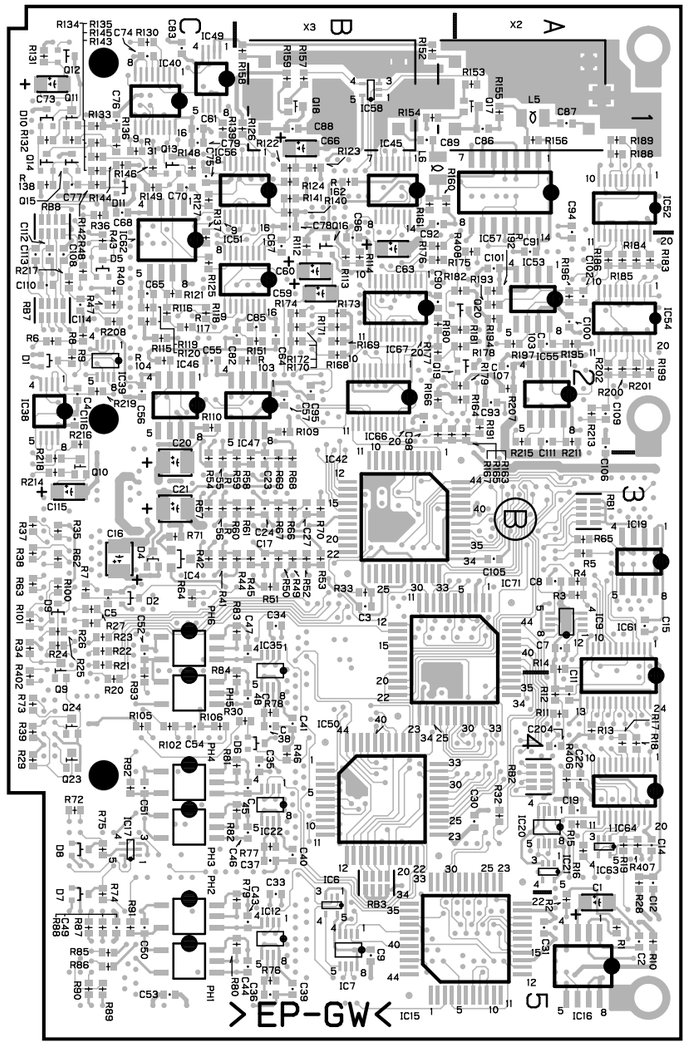

SG-226 -B SIDE-
1-660-246-14

SG-226 (1-660-246-13)

CNI24	B5	C95	*B2	PH1	*C5
		C96	*B2	PH2	*C5
CN1	C2	C97	A2	PH3	*C4
		C98	*B2	PH4	*C4
CV2	A4	C99	A1	PH5	*C4
		C100	*A2	PH6	*C3
C1	*A5	C101	*A2		
C2	*A5	C102	*A2	Q1	C3
C3	*B3	C103	*A2	Q2	C3
C4	*C2	C104	A2	Q3	C3
C5	*C3	C105	*A3	Q4	C3
C6	A5	C106	*A2	Q5	C3
C7	*A3	C107	*A2	Q6	C3
C8	*A3	C108	*C2	Q9	*C3
C9	*B5	C109	*A2	Q10	*C3
C10	A3	C110	*C2	Q11	*C1
C11	*A4	C111	*A2	Q12	*C1
C12	*A4	C112	*C2	Q13	*C1
C14	*A4	C113	*C2	Q14	*C1
C15	*A3	C114	*C2	Q15	*C1
C16	*C3	C115	*C3	Q16	*B2
C17	*B3	C116	*C2	Q17	*A1
C18	B3	C202	A4	Q18	*B1
C19	*A4			Q19	*A2
C20	*C3	D1	*C2	Q20	*A2
C21	*C3	D2	*C3	Q23	*C4
C22	*A4	D3	A5	Q24	*C4
C23	*B3	D4	*C3	Q30	C4
C24	*B3	D5	*C2		
C25	B3	D6	*B4	R1	*A5
C26	B3	D7	*C5	R2	*A5
C27	*B3	D8	*C4	R3	*A3
C30	*A4	D9	*C3	R4	*A3
C31	*A5	D10	*C1	R5	*A3
C32	B4	D11	*C1	R6	*C2
C33	*B5			R7	*C3
C34	*B3	E1	C3	R8	*C2
C35	*B4	E2	C1	R9	*C2
C36	*B5			R10	*A5
C37	*B4	IC3	B3	R11	*A4
C38	*B4	IC4	*C3	R12	*A4
C39	*B5	IC5	C5	R13	*A4
C40	*B4	IC6	*B5	R14	*A3
C41	*B4	IC7	*B5	R15	*A4
C42	C4	IC8	C5	R16	*A4
C43	*B5	IC9	*A3	R17	*A4
C44	*B5	IC10	A4	R18	*A4
C45	*B4	IC11	C3	R19	*A4
C46	*B4	IC12	*B5	R20	*C4
C47	*B3	IC13	B3	R21	*C3
C48	*B4	IC14	B5	R22	*C3
C49	*C5	IC15	*A5	R23	*C3
C50	*C5	IC16	*A5	R24	*C3
C51	*C4	IC17	*C4	R25	*C3
C52	*C3	IC18	C5	R26	*C3
C53	*C5	IC19	*A3	R27	*C3
C54	*C4	IC20	*A4	R28	*A4
C55	*C2	IC21	*A4	R29	*C4
C56	*C2	IC22	*B4	R30	*B4
C57	*B2	IC23	B4	R31	*C1
C58	C2	IC34	A3	R32	*A4
C59	*B2	IC35	*B3	R33	*B3
C60	*B2	IC37	B3	R34	*C3
C61	*C1	IC38	*C2	R35	*C3
C62	C2	IC39	*C2	R36	*C1
C63	*B2	IC40	*C1	R37	*C3
C64	*B2	IC42	*B3	R38	*C3
C65	*C2	IC45	*B1	R39	*C4
C66	*B1	IC46	*C2	R40	*C2
C67	*B2	IC47	*B2	R41	*C3
C68	*C1	IC48	C1	R42	*C3
C69	C2	IC49	*C1	R43	*C2
C70	*C1	IC50	*B4	R44	*B3
C71	C1	IC51	*B2	R45	*B3
C72	C1	IC52	*A1	R46	*B4
C73	*C1	IC53	*A2	R47	*C2
C74	*C1	IC54	*A2	R48	*C2
C75	*C1	IC55	*A2	R49	*B3
C76	*C1	IC56	*B1	R50	*B3
C77	*C1	IC57	*A1	R51	*B3
C78	*B1	IC58	*B1	R52	*B3
C79	*C1	IC59	B2	R53	*B3
C80	C1	IC60	C2	R54	*C3
C81	C1	IC61	*A3	R55	*C3
C82	*B2	IC62	*C1	R56	*C3
C83	*C1	IC63	*A4	R57	*C3
C84	C1	IC64	*A4	R58	*B3
C85	*B2	IC65	B2	R59	*B3
C86	*A1	IC66	*B2	R60	*B3
C87	*A1	IC67	*B2	R61	*B3
C88	*B1	IC69	A4	R62	*C3
C89	*B1	IC71	*B3	R63	*C3
C90	*B2			R64	*C3
C91	*A2	L4	C4	R65	*A3
C92	*B1	L5	*A1	R66	*B3
C93	*A2	L6	*B1	R67	*B3
C94	*A1	L7	A5	R68	*B3

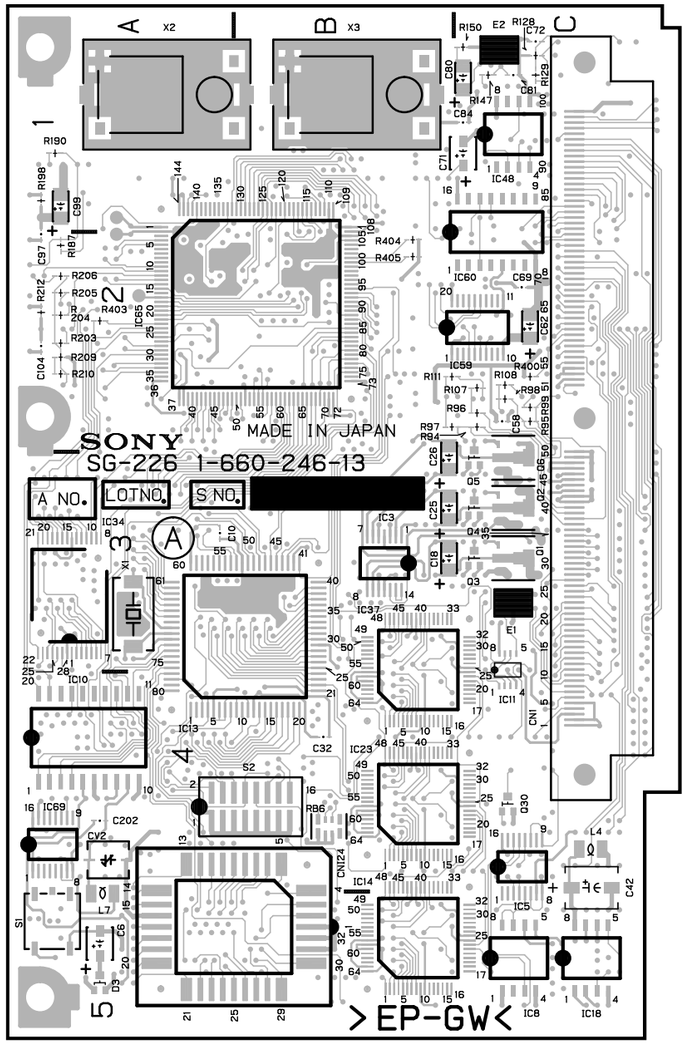

HDC-700 : S/N 10053 through 11000
HDCA-750 : S/N 10096 through 11000

SG-226 -A SIDE-
1-660-246-13

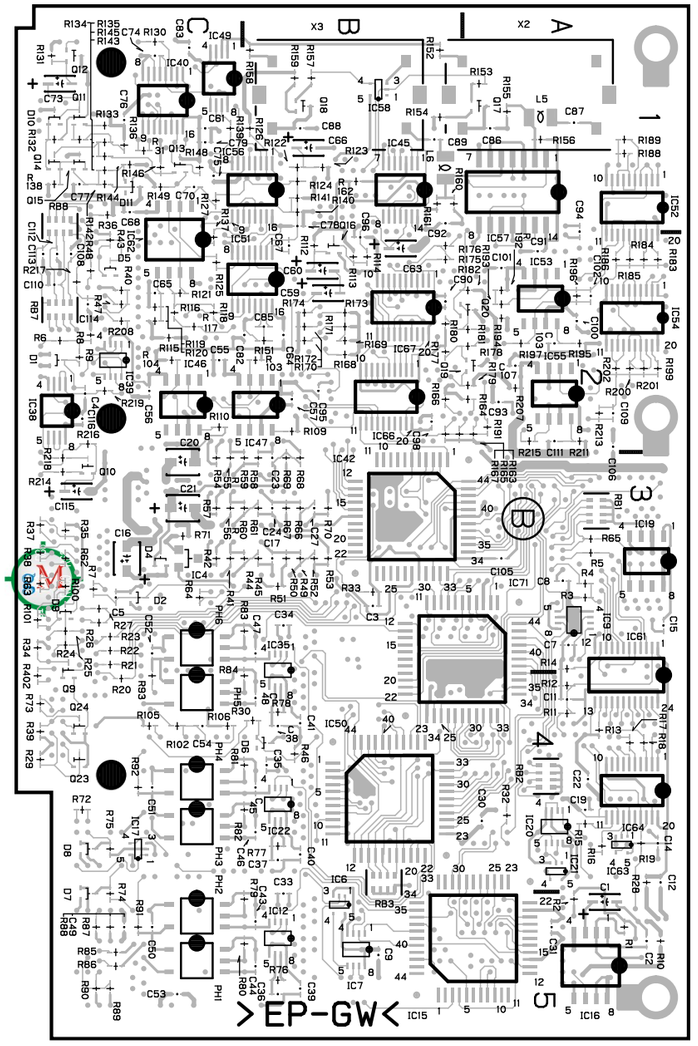

SG-226 -B SIDE-
1-660-246-13

R69	*B3	R166	*B2
R70	*B3	R167	*B2
R71	*C3	R168	*B2
R72	*C4	R169	*B2
R73	*C4	R170	*B2
R74	*C5	R171	*B2
R75	*C4	R172	*B2
R76	*B5	R173	*B2
R77	*B4	R174	*B2
R78	*B4	R175	*B2
R79	*B5	R176	*B2
R80	*B5	R177	*B2
R81	*B4	R178	*A2
R82	*B4	R179	*A2
R83	*B3	R180	*B2
R84	*B4	R181	*A2
R85	*C5	R182	*A2
R86	*C5	R183	*A2
R87	*C5	R184	*A2
R88	*C5	R185	*A2
R89	*C5	R186	*A2
R90	*C5	R187	A2
R91	*C5	R188	*A1
R92	*C4	R189	*A1
R93	*C4	R190	A1
R94	C2	R191	*A2
R95	C2	R192	*A2
R96	C2	R193	*A2
R97	B2	R194	*A2
R98	C2	R195	*A2
R99	C2	R196	*A2
R100	*C3	R197	*A2
R101	*C3	R198	A1
R102	*C4	R199	*A2
R103	*B2	R200	*A2
R104	*C2	R201	*A2
R105	*C4	R202	*A2
R106	*C4	R203	A2
R107	C2	R204	A2
R108	C2	R205	A2
R109	*B2	R206	A2
R110	*C2	R207	*A2
R111	B2	R208	*C2
R112	*B2	R209	A2
R113	*B2	R210	A2
R114	*B2	R211	*A2
R115	*C2	R212	A2
R116	*C2	R213	*A2
R117	*C2	R214	*C3
R118	*C2	R215	*A2
R119	*C2	R216	*C2
R120	*C2	R217	*C2
R121	*C2	R218	*C3
R122	*B1	R219	*C2
R123	*B1	R400	C2
R124	*B1	R402	*C4
R125	*C2	R403	A2
R126	*B1	R404	B2
R127	*C1	R405	B2
R128	C1		
R129	C1	RB1	*A3
R130	*C1	RB2	*A4
R131	*C1	RB3	*B4
R132	*C1	RB6	B4
R133	*C1	RB7	*C2
R134	*C1	RB8	*C1
R135	*C1		
R136	*C1	S1	A5
R137	*C2	S2	B4
R138	*C1		
R139	*C1	X1	A3
R140	*B1	X2	A1
R141	*B1	X3	B1
R142	*C1		
R143	*C1	*:B SIDE	
R144	*C1		
R145	*C1		
R146	*C1		
R147	C1		
R148	*C1		
R149	*C1		
R150	C1		
R151	*B2		
R152	*B1		
R153	*A1		
R154	*B1		
R155	*A1		
R156	*A1		
R157	*B1		
R158	*B1		
R159	*B1		
R160	*B1		
R161	*B1		
R162	*B1		
R163	*A2		
R164	*A2		
R165	*B2		

SG-226 (1-660-246-12)

CNI24	B5	C94	*A1	L7	A5
		C95	*B2		
CN1	C2	C96	*B2	PH1	*C5
		C97	A2	PH2	*C5
CV1	A4	C98	*B2	PH3	*C4
CV2	A4	C99	A1	PH4	*C4
		C100	*A2	PH5	*C4
C1	*A5	C101	*A2	PH6	*C3
C2	*A5	C103	*A2		
C3	*B3	C104	A2	Q1	C3
C4	*C2	C105	*A3	Q2	C3
C5	*C3	C106	*A2	Q3	C3
C6	A5	C107	*A2	Q4	C3
C7	*A3	C108	*C2	Q5	C3
C8	*A3	C110	*C2	Q6	C3
C9	*B5	C111	*A2	Q9	*C3
C10	A3	C112	*C2	Q10	*C3
C11	*A4	C113	*C2	Q11	*C1
C12	*A4	C114	*C2	Q12	*C1
C14	*A4	C115	*C3	Q13	*C1
C15	*A3	C116	*C2	Q14	*C1
C16	*C3			Q15	*C1
C17	*B3	D1	*C2	Q16	*B2
C18	B3	D2	*C3	Q17	*A1
C19	*A4	D3	A5	Q18	*B1
C20	*C3	D4	*C3	Q19	*A2
C21	*C3	D5	*C2	Q20	*A2
C22	*A4	D6	*B4	Q23	*C4
C23	*B3	D7	*C5	Q24	*C4
C24	*B3	D8	*C4	Q30	C4
C25	B3	D9	*C3		
C26	B3	D10	*C1	RB1	*A3
C27	*B3	D11	*C1	RB2	*A4
C30	*A4	D20	*A4	RB3	*B4
C31	*A5			RB6	B4
C32	B4	E1	C3	RB7	*C2
C33	*B5	E2	C1	RB8	*C1
C34	*B3				
C35	*B4	IC3	B3	R1	*A5
C36	*B5	IC4	*C3	R2	*A5
C37	*B4	IC5	C5	R3	*A3
C38	*B4	IC6	*B5	R4	*A3
C39	*B5	IC7	*B5	R5	*A3
C40	*B4	IC8	C5	R6	*C2
C41	*B4	IC9	*A3	R7	*C3
C42	C4	IC10	A4	R8	*C2
C43	*B5	IC11	C3	R9	*C2
C44	*B5	IC12	*B5	R10	*A5
C45	*B4	IC13	B3	R11	*A4
C46	*B4	IC14	B5	R12	*A4
C47	*B3	IC15	*A5	R13	*A4
C48	*B4	IC16	*A5	R14	*A3
C49	*C5	IC17	*C4	R15	*A4
C50	*C5	IC18	C5	R16	*A4
C51	*C4	IC19	*A3	R17	*A4
C52	*C3	IC20	*A4	R18	*A4
C53	*C5	IC21	*A4	R19	*A4
C54	*C4	IC22	*B4	R20	*C4
C55	*C2	IC23	B4	R21	*C3
C56	*C2	IC24	B5	R22	*C3
C57	*B2	IC34	A3	R23	*C3
C58	C2	IC35	*B3	R24	*C3
C59	*B2	IC37	B3	R25	*C3
C60	*B2	IC38	*C2	R26	*C3
C61	*C1	IC39	*C2	R27	*C3
C62	C2	IC40	*C1	R28	*A4
C63	*B2	IC42	*B3	R29	*C4
C64	*B2	IC45	*B1	R30	*B4
C65	*C2	IC46	*C2	R31	*C1
C66	*B1	IC47	*B2	R32	*A4
C67	*B2	IC48	C1	R33	*B3
C68	*C1	IC49	*C1	R34	*C3
C69	C2	IC50	*B4	R35	*C3
C70	*C1	IC51	*B2	R36	*C1
C71	C1	IC52	*A1	R37	*C3
C72	C1	IC53	*A2	R38	*C3
C73	*C1	IC54	*A2	R39	*C4
C74	*C1	IC55	*A2	R40	*C2
C75	*C1	IC56	*B1	R41	*C3
C76	*C1	IC57	*A1	R42	*C3
C77	*C1	IC58	*B1	R43	*C2
C78	*B1	IC59	B2	R44	*B3
C79	*C1	IC60	C2	R45	*B3
C80	C1	IC61	*A3	R46	*B4
C81	C1	IC62	*C1	R47	*C2
C82	*B2	IC63	*A4	R48	*C2
C83	*C1	IC64	*A4	R49	*B3
C84	C1	IC65	B2	R50	*B3
C85	*B2	IC66	*B2	R51	*B3
C86	*A1	IC67	*B2	R52	*B3
C87	*A1	IC69	A4	R53	*B3
C88	*B1	IC71	*B3	R54	*C3
C89	*B1			R55	*C3
C90	*B2	L3	A4	R56	*C3
C91	*A2	L4	C4	R57	*C3
C92	*B1	L5	*A1	R58	*B3
C93	*A2	L6	*B1	R59	*B3

R60	*B3	R157	*B1	R208	*C2
R61	*B3	R158	*B1	R209	A2
R62	*C3	R159	*B1	R210	A2
R63	*C3	R160	*B1	R211	*A2
R64	*C3	R161	*B1	R212	A2
R65	*A3	R163	*A2	R213	*A2
R66	*B3	R164	*A2	R214	*C3
R67	*B3	R167	*B2	R215	*A2
R68	*B3	R168	*B2	R216	*C2
R69	*B3	R173	*B2	R217	*C2
R70	*B3	R175	*B2	R218	*C3
R71	*C3	R177	*B2	R219	*C2
R72	*C4	R178	*A2	R400	C2
R73	*C4	R179	*A2	R402	*C4
R74	*C5	R180	*B2	R403	A2
R75	*C4	R181	*A2		
R76	*B5	R182	*A2	S1	A5
R77	*B4	R183	*A2	S2	B4
R78	*B4	R184	*A2		
R79	*B5	R185	*A2	X1	A3
R80	*B5	R186	*A2	X2	A1
R81	*B4	R187	A2	X3	B1
R82	*B4	R188	*A1		
R83	*B3	R189	*A1		
R84	*B4	R190	A1		
R85	*C5	R191	*A2		
R86	*C5	R192	*A2		
R87	*C5	R193	*A2		
R88	*C5	R194	*A2		
R89	*C5	R195	*A2		
R90	*C5	R196	*A2		
R91	*C5	R197	*A2		
R92	*C4	R198	A1		
R93	*C4	R199	*A2		
R94	C2	R200	*A2		
R95	C2	R201	*A2		
R96	C2	R202	*A2		
R97	B2	R203	A2		
R98	C2	R204	A2		
R99	C2	R205	A2		
R100	*C3	R206	A2		
R101	*C3	R207	*A2		
R102	*C4				
R103	*B2				
R104	*C2				
R105	*C4				
R106	*C4				
R107	C2				
R108	C2				
R109	*B2				
R110	*C2				
R111	B2				
R112	*B2				
R113	*B2				
R114	*B2				
R115	*C2				
R116	*C2				
R117	*C2				
R118	*C2				
R119	*C2				
R120	*C2				
R121	*C2				
R122	*B1				
R123	*B1				
R124	*B1				
R125	*C2				
R126	*B1				
R127	*C1				
R128	C1				
R129	C1				
R130	*C1				
R131	*C1				
R132	*C1				
R133	*C1				
R134	*C1				
R135	*C1				
R136	*C1				
R137	*C2				
R138	*C1				
R139	*C1				
R140	*B1				
R141	*B1				
R142	*C1				
R143	*C1				
R144	*C1				
R145	*C1				
R146	*C1				
R147	C1				
R148	*C1				
R149	*C1				
R150	C1				
R151	*B2				
R152	*B1				
R153	*A1				
R154	*B1				
R155	*A1				
R156	*A1				

*:B SIDE

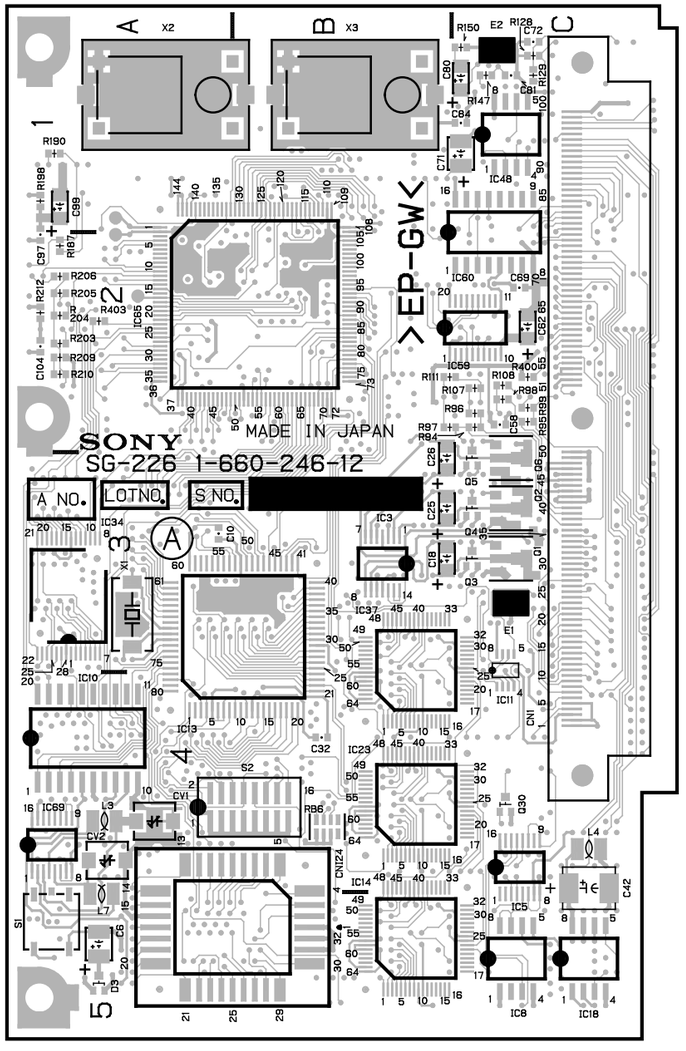

HDC-700 : S/N 10013 through 10052
HDCA-750 : S/N 10041 through 10095

SG-226 -A SIDE-
1-660-246-12

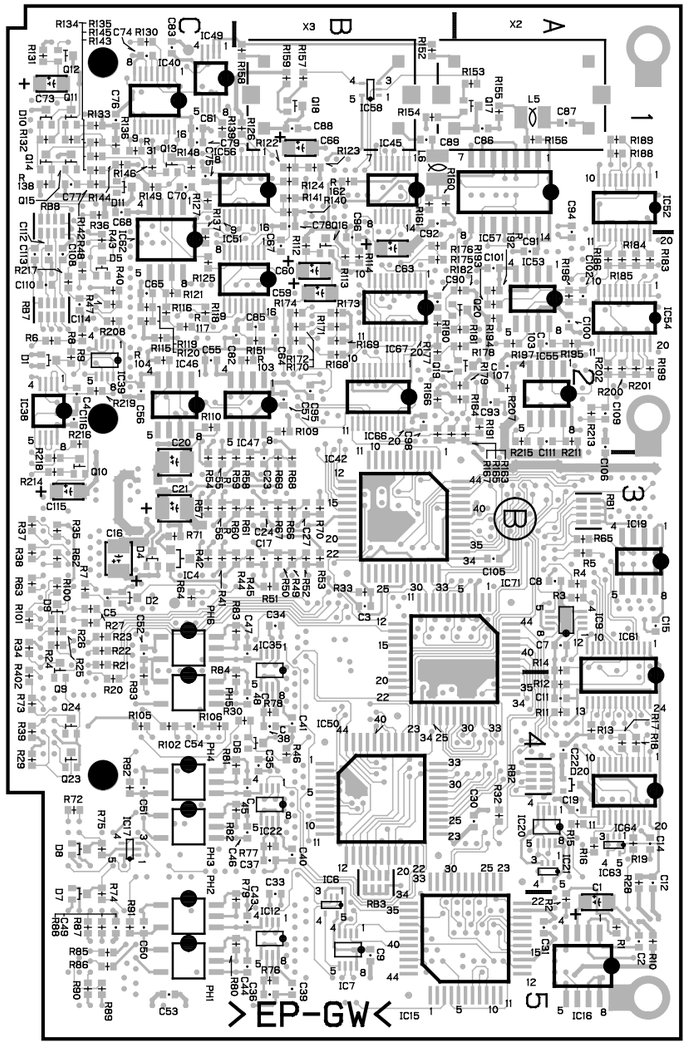

SG-226 -B SIDE-
1-660-246-12

SG-226 (1-660-246-11)

CNI24	B5	C89	*B1	L3	A4
		C90	*B2	L4	C4
CN1	C2	C91	*A2	L5	*A1
		C92	*B1	L6	*B1
CV1	A4	C93	*A2	L7	A5
CV2	A4	C94	*A1		
		C95	*B2	PH1	*C5
C1	*A5	C96	*B2	PH2	*C5
C2	*A5	C97	A2	PH3	*C4
C3	*B3	C98	*B2	PH4	*C4
C4	*C2	C99	A1	PH5	*C4
C5	*C3	C100	*A2	PH6	*C3
C6	A5	C101	*A2		
C7	*A3	C103	*A2	Q1	C3
C8	*A3	C104	A2	Q2	C3
C9	*B5	C105	*A3	Q3	C3
C10	A3	C106	*A2	Q4	C3
C11	*A4	C107	*A2	Q5	C3
C12	*A4	C108	*C2	Q6	C3
C13	*A4	C110	*C2	Q9	*C3
C14	*A4	C111	*A2	Q10	*C3
C15	*A3	C112	*C2	Q11	*C1
C16	*C3	C113	*C2	Q12	*C1
C17	*B3	C114	*C2	Q13	*C1
C18	B3	C115	*C3	Q14	*C1
C19	*A4	C116	*C2	Q15	*C1
C20	*C3			Q16	*B2
C21	*C3	D1	*C2	Q17	*A1
C22	*A4	D2	*C3	Q18	*B1
C23	*B3	D3	A5	Q19	*A2
C24	*B3	D4	*C3	Q20	*A2
C25	B3	D5	*C2	Q23	*C4
C26	B3	D6	*B4	Q24	*C4
C27	*B3	D7	*C5	Q25	*A4
C28	*C2	D8	*C4		
C29	*C3	D9	*C3	RB1	*A3
C30	*A4	D10	*C1	RB2	*A4
C31	*A5	D11	*C1	RB3	*B4
C32	B4			RB6	B4
C33	*B5	E1	C3	RB7	*C2
C34	*B3	E2	C1	RB8	*C1
C35	*B4				
C36	*B5	IC3	B3	R1	*A5
C37	*B4	IC4	*C3	R2	*A5
C38	*B4	IC5	C5	R3	*A3
C39	*B5	IC6	*B5	R4	*A3
C40	*B4	IC7	*B5	R5	*A3
C41	*B4	IC8	C5	R6	*C2
C42	C4	IC9	*A3	R7	*C3
C43	*B5	IC10	A4	R8	*C2
C44	*B5	IC11	C3	R9	*C2
C45	*B4	IC12	*B5	R10	*A5
C46	*B4	IC13	B3	R11	*A4
C47	*B3	IC14	B5	R12	*A4
C48	*B4	IC15	*A5	R13	*A4
C49	*C5	IC16	*A5	R14	*A3
C50	*C5	IC17	*C4	R15	*A4
C51	*C4	IC18	C5	R16	*A4
C52	*C3	IC19	*A3	R17	*A4
C53	*C5	IC20	*A4	R18	*A4
C54	*C4	IC21	*A4	R19	*A4
C55	*C2	IC22	*B4	R20	*C4
C56	*C2	IC23	B4	R21	*C3
C57	*B2	IC24	B5	R22	*C3
C58	C2	IC34	A3	R23	*C3
C59	*B2	IC35	*B3	R24	*C3
C60	*B2	IC37	B3	R25	*C3
C61	*C1	IC38	*C2	R26	*C3
C62	C2	IC39	*C2	R27	*C3
C63	*B2	IC40	*C1	R28	*A5
C64	*B2	IC42	*B3	R29	*C4
C65	*C2	IC45	*B1	R30	*B4
C66	*B1	IC46	*C2	R31	*C1
C67	*B2	IC47	*B2	R32	*A4
C68	*C1	IC48	C1	R33	*B3
C69	C2	IC49	*C1	R34	*C4
C70	*C1	IC50	*B4	R35	*C3
C71	C1	IC51	*B2	R36	*C1
C72	C1	IC52	*A1	R37	*C3
C73	*C1	IC53	*A2	R38	*C3
C74	*C1	IC54	*A2	R39	*C4
C75	*C1	IC55	*A2	R40	*C2
C76	*C1	IC56	*B1	R41	*C3
C77	*C1	IC57	*A1	R42	*C3
C78	*B1	IC58	*B1	R43	*C2
C79	*C1	IC59	B2	R44	*B3
C80	C1	IC60	C2	R45	*B3
C81	C1	IC61	*A3	R46	*B4
C82	*B2	IC62	*C1	R47	*C2
C83	*C1	IC63	*A4	R48	*C2
C84	C1	IC64	*A4	R49	*B3
C85	*B2	IC65	B2	R50	*B3
C86	*A1	IC66	*B2	R51	*B3
C87	*A1	IC67	*B2	R52	*B3
C88	*B1	IC69	A4	R53	*B3
		IC71	*B3		

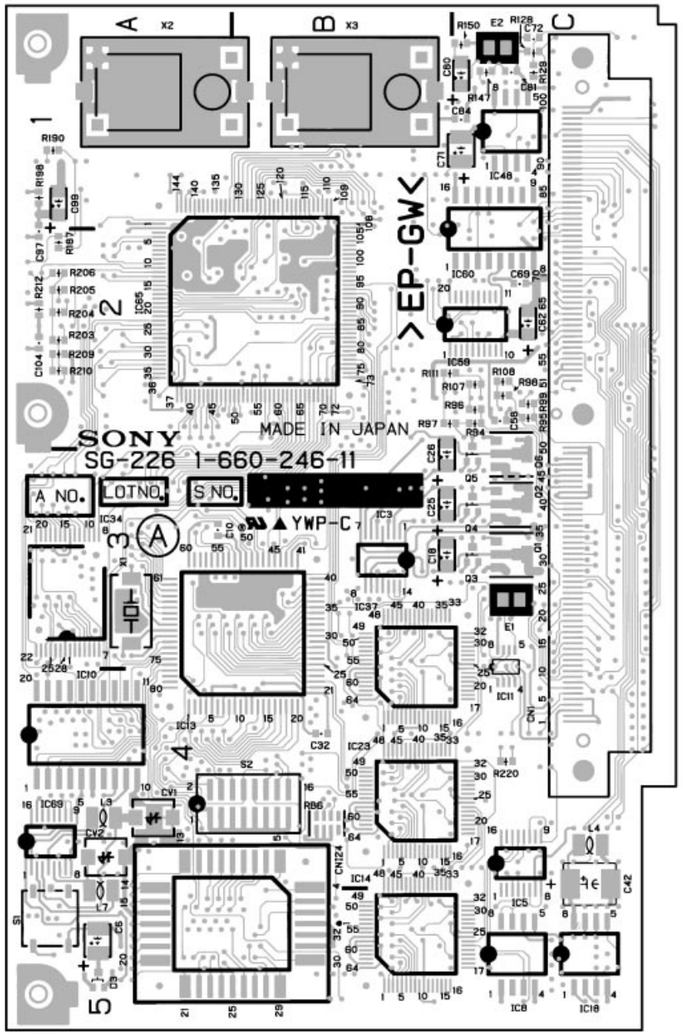

HDC-700 : S/N 10001 through 10012
HDCA-750 : S/N 10001 through 10040

SG-226 -A SIDE-
1-660-246-11

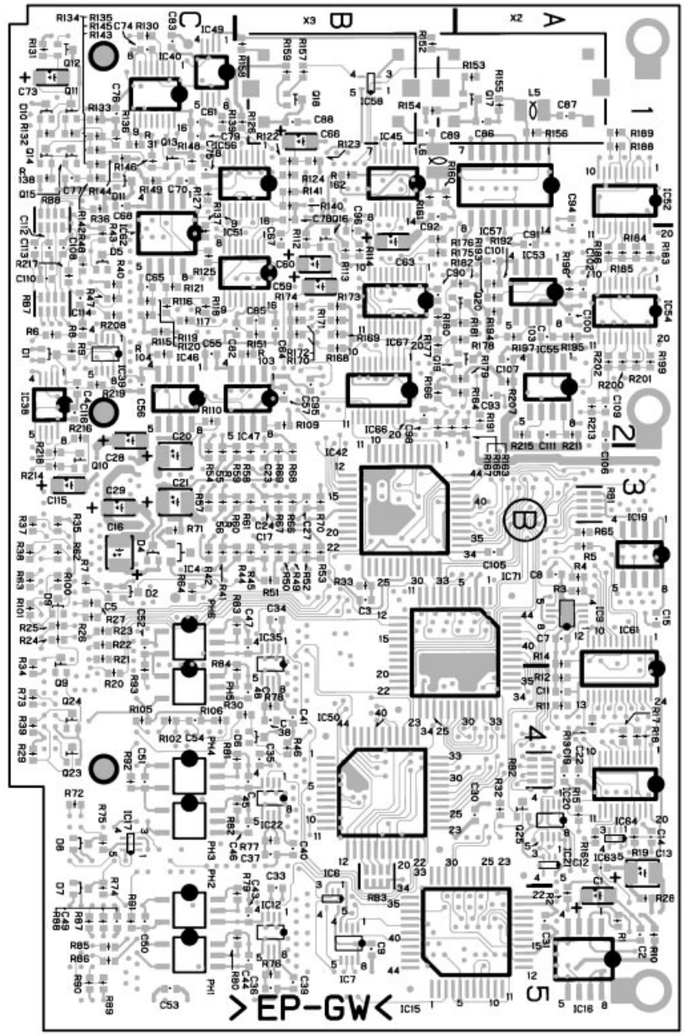

SG-226 -B SIDE-
1-660-246-11

R54	*C3	R150	C1		
R55	*C3	R151	*B2		
R56	*C3	R152	*B1		
R57	*C3	R153	*A1		
R58	*B3	R154	*B1		
R59	*B3	R155	*A1		
R60	*B3	R156	*A1		
R61	*B3	R157	*B1		
R62	*C3	R158	*B1		
R63	*C3	R159	*B1		
R64	*C3	R160	*B1		
R65	*A3	R161	*B1		
R66	*B3	R163	*A2		
R67	*B3	R164	*A2		
R68	*B3	R168	*B2		
R69	*B3	R173	*B2		
R70	*B3	R175	*B2		
R71	*C3	R177	*B2		
R72	*C4	R178	*A2		
R73	*C4	R179	*A2		
R74	*C5	R180	*B2		
R75	*C4	R181	*A2		
R76	*B5	R182	*A2		
R77	*B4	R183	*A2		
R78	*B4	R184	*A2		
R79	*B5	R185	*A2		
R80	*B5	R186	*A2		
R81	*B4	R187	A2		
R82	*B4	R188	*A1		
R83	*B3	R189	*A1		
R84	*B4	R190	A1		
R85	*C5	R191	*A2		
R86	*C5	R192	*A2		
R87	*C5	R193	*A2		
R88	*C5	R194	*A2		
R89	*C5	R195	*A2		
R90	*C5	R196	*A2		
R91	*C5	R197	*A2		
R92	*C4	R198	A1		
R93	*C4	R199	*A2		
R94	C2	R200	*A2		
R95	C2	R201	*A2		
R96	C2	R202	*A2		
R97	B2	R203	A2		
R98	C2	R204	A2		
R99	C2	R205	A2		
R100	*C3	R206	A2		
R101	*C3	R207	*A2		
R102	*C4	R208	*C2		
R103	*B2	R209	A2		
R104	*C2	R210	A2		
R105	*C4	R211	*A2		
R106	*C4	R212	A2		
R107	C2	R213	*A2		
R108	C2	R214	*C3		
R109	*B2	R215	*A2		
R110	*C2	R216	*C2		
R111	B2	R217	*C2		
R112	*B2	R218	*C3		
R113	*B2	R219	*C2		
R114	*B2	R220	C4		
R115	*C2				
R116	*C2	S1	A5		
R117	*C2	S2	B4		
R118	*C2				
R119	*C2	X1	A3		
R120	*C2	X2	A1		
R121	*C2	X3	B1		
R122	*B1				
R123	*B1	*:B SIDE			
R124	*B1				
R125	*C2				
R126	*B1				
R127	*C1				
R128	C1				
R129	C1				
R130	*C1				
R131	*C1				
R132	*C1				
R133	*C1				
R134	*C1				
R135	*C1				
R136	*C1				
R137	*C2				
R138	*C1				
R139	*C1				
R140	*B1				
R141	*B1				
R142	*C1				
R143	*C1				
R144	*C1				
R145	*C1				
R146	*C1				
R147	C1				
R148	*C1				
R149	*C1				

PS-400 (1-660-250-14)

CB1	A4	D1	*A4	Q53	B1	R87	*A3
		D2	B1	Q54	*B1	R88	*A2
CN1	C3	D3	*B3	Q60	*C1	R89	*B4
		D4	*A2	Q62	*B3	R90	*B3
CP1	C1	D5	*C4	Q63	*C3	R91	*A3
		D6	*B3	Q64	B3	R92	*B2
C1	*B3	D7	*B1	Q65	B2	R93	*C4
C2	A3	D8	A1	Q66	*B2	R94	A1
C3	*B3	D9	*B4	Q70	*A3	R95	*B3
C4	A2	D10	*A4	Q71	B3	R96	*A2
C6	A2	D11	*B4	Q72	*B3	R97	*C4
C8	B3	D12	*C2			R98	*A1
C9	*A2	D13	*B2	R1	*C1	R99	*B4
C10	*A3	D14	*C1	R2	*C1	R100	*A2
C11	A2	D15	B3	R3	*C2	R101	*B1
C12	A3			R4	*C2	R102	*C4
C13	A2	FB1	A1	R5	*C2	R107	*A4
C14	*A3	FB2	B3	R6	*C2	R108	*A3
C15	A4	FB3	B1	R7	*C2	R109	*A3
C16	*A2	FB4	B4	R8	*C3	R110	*B4
C17	*A2	FB5	B4	R9	*C3	R111	*A3
C18	*A2	FB6	B3	R10	*C2	R112	*B4
C19	A4			R11	*C2	R113	*C1
C20	*A4	IC1	A2	R12	*C2	R114	*C1
C21	*A3	IC2	A2	R13	*C2	R115	*C1
C22	A3	IC3	A3	R14	*C2	R116	*C1
C23	*A2	IC4	B4	R15	*C2	R117	*C1
C24	A2	IC5	A3	R16	*C2	R118	*C1
C25	A3	IC6	C1	R17	*C3	R119	C2
C26	*C1	IC7	C3	R18	*C3	R120	C2
C27	*C1	IC10	B3	R19	A2	R121	C2
C28	*A4			R20	A2	R122	B2
C29	A2	L1	A4	R21	*B3	R123	*B2
C30	*A3	L2	B2	R22	*A3	R124	*C2
C31	A4	L3	B2	R23	*A1	R125	C1
C33	B4	L4	A1	R24	A2	R126	*B2
C34	*A4	L5	B1	R25	*A2	R127	*C1
C35	A3	L6	B4	R26	*A3	R128	*B2
C38	B4	L7	C4	R27	*C3	R129	*C1
C39	B2	L8	B3	R28	*C3	R130	*B1
C40	B3	L10	B4	R29	*A3	R131	*C1
C41	*A3	L11	C4	R30	*A3	R132	*C1
C42	*A2	L12	B3	R31	*C3	R135	*B3
C43	*B4	L13	C4	R32	*A2	R150	*C1
C44	A3	L15	B2	R33	*A2	R151	*C1
C45	*A4			R34	A3	R154	*A4
C47	A1	Q1	*C2	R35	A2	R160	C3
C48	B3	Q2	*C2	R36	*A3	R161	C3
C49	*B2	Q3	*C2	R37	*A2	R162	C3
C50	*B4	Q4	*C3	R38	*A3	R163	B3
C52	A3	Q5	*C2	R39	*A2	R164	*C3
C53	A1	Q6	*C2	R40	*A2	R165	*C3
C54	C3	Q7	*C3	R41	*A2	R166	B3
C55	*A1	Q8	*C3	R42	*A1	R167	C2
C56	B1	Q9	*C3	R43	*A3	R168	C2
C57	B4	Q10	*A2	R44	*A4	R169	*B2
C58	*C3	Q11	*A3	R45	*A4	R170	*C2
C59	*B1	Q12	*A4	R46	*A2	R171	*B3
C60	*B4	Q13	A2	R47	*A1	R172	*B3
C61	B1	Q14	A3	R48	*A4	R173	*A3
C63	*B1	Q15	*A2	R49	*A3	R174	*B3
C64	*A3	Q16	A3	R50	*A1	R175	*B3
C65	B1	Q17	A4	R51	*A2	R176	*A3
C66	*A4	Q18	B1	R52	*A2	R177	*B3
C67	C4	Q19	*B4	R53	*A2	R178	*B3
C69	B1	Q20	B3	R54	*A2	R179	*B3
C70	*B1	Q21	*A3	R55	*A3	R180	*B3
C71	*C4	Q22	*A2	R56	B3	R181	*B3
C73	*C1	Q23	*A1	R57	A4	R182	*B3
C74	*C1	Q24	*A1	R58	A3	R183	*B3
C75	C4	Q25	*B4	R59	*A3		
C76	*C4	Q26	*B3	R60	*A4	*:B SIDE	
C77	C4	Q27	*B3	R61	*A4		
C78	B2	Q28	*A2	R62	*A3		
C79	*B2	Q29	*A2	R63	*A3		
C80	*C4	Q30	*C4	R64	*A3		
C81	B2	Q31	*C4	R65	*A4		
C82	A2	Q32	*A1	R66	*A4		
C83	*C4	Q33	*B3	R67	*A2		
C85	*B2	Q34	*A1	R68	A3		
C86	*C1	Q35	*B1	R69	*C1		
C87	B2	Q36	*B4	R70	A2		
C88	*B2	Q37	*A4	R71	*B4		
C90	*C1	Q38	A3	R72	A3		
C101	C2	Q39	*A4	R73	A2		
C102	B2	Q40	*A4	R74	*A3		
C103	*C3	Q41	*A3	R75	*B4		
C104	C3	Q42	*B4	R76	*A2		
C105	C2	Q43	C2	R77	*A2		
C110	A3	Q44	C2	R78	*B4		
C111	B2	Q45	*C2	R80	*A3		
C112	A3	Q46	*B2	R81	B1		
C113	*B3	Q47	*C2	R82	*A4		
C114	*B3	Q48	*C2	R83	B1		
C115	*B3	Q49	*B2	R84	B3		
C116	B3	Q50	C1	R85	*A3		
C117	*B3	Q51	*C1	R86	*A4		

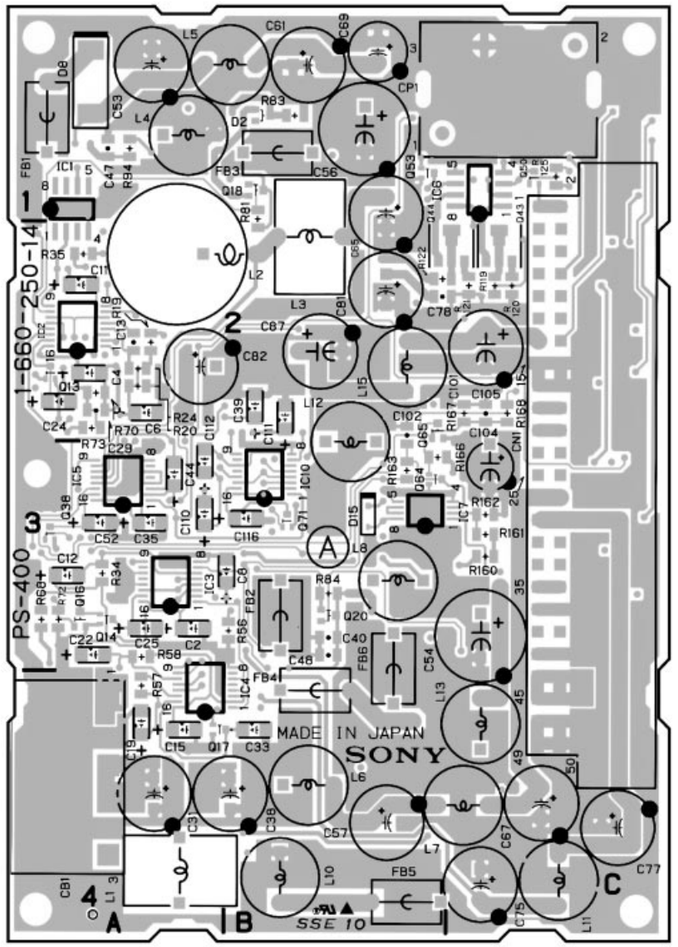

HDC-700 : S/N 10078 and Higher
HDCA-750 : S/N 10116 and Higher

PS-400 -A SIDE-
1-660-250-14

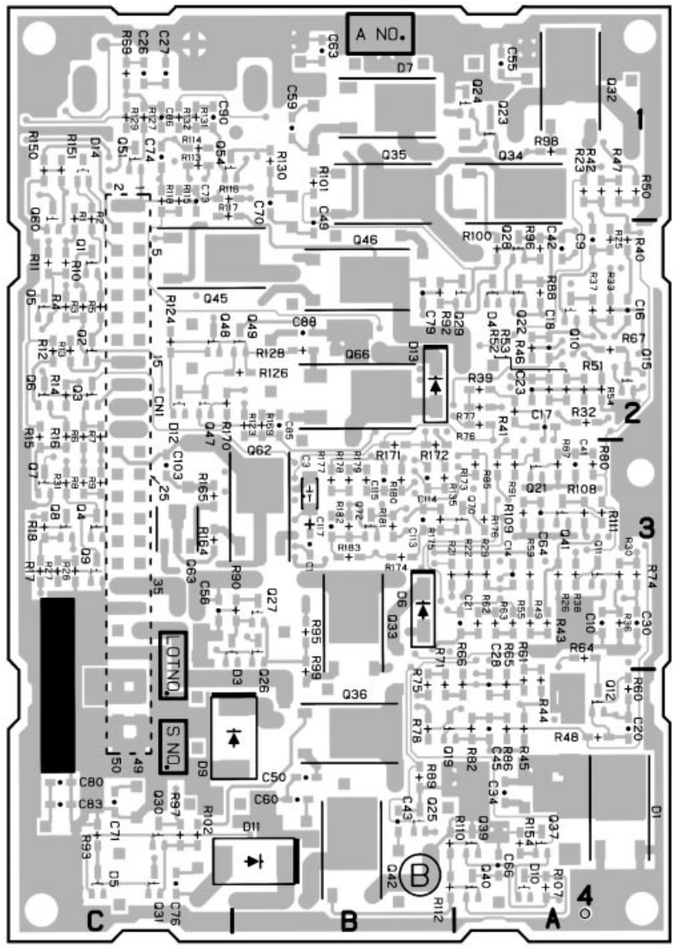

PS-400 -B SIDE-
1-660-250-14

PS-400 (1-660-250-13)

CB1	A4	D5	*C4
		D6	*B3
CN1	C3	D7	*B1
		D8	A1
CP1	C1	D9	*B4
		D10	*A4
C1	B3	D11	*B4
C2	A3	D12	*C2
C3	B3	D13	*B2
C4	A2	D14	*C1
C6	A2	D15	B3
C8	B3		
C9	*A2	FB1	A1
C10	*A3	FB2	B3
C11	A2	FB3	B1
C12	A3	FB4	B4
C13	A2	FB5	B4
C14	*A3	FB6	B3
C15	A4		
C16	*A2	IC1	A2
C17	*A2	IC2	A2
C18	*A2	IC3	A3
C19	A4	IC4	B4
C20	*A4	IC5	A3
C21	*A3	IC6	C1
C22	A3	IC7	B3
C23	*A2		
C24	A2	L1	A4
C25	A3	L2	B2
C26	*C1	L3	B2
C27	*C1	L4	A1
C28	*A4	L5	B1
C29	A2	L6	B4
C30	*A3	L7	C4
C31	A4	L8	B3
C33	B4	L10	B4
C34	*A4	L11	C4
C35	A3	L12	B3
C38	B4	L13	C4
C39	B3	L15	B2
C40	B3		
C41	*A3	Q1	*C2
C42	*A2	Q2	*C2
C43	*B4	Q3	*C2
C44	B3	Q4	*C3
C45	*A4	Q5	*C2
C46	*A3	Q6	*C2
C47	A1	Q7	*C3
C48	B3	Q8	*C3
C49	*B2	Q9	*C3
C50	*B4	Q10	*A2
C51	*A3	Q11	*A3
C52	A3	Q12	*A4
C53	A1	Q13	A2
C54	C3	Q14	A3
C55	*A1	Q15	*A2
C56	B1	Q16	A3
C57	B4	Q17	A4
C58	*C3	Q18	B1
C59	*B1	Q19	*B4
C60	*B4	Q20	B3
C61	B1	Q21	*A3
C63	*B1	Q22	*A2
C64	*A3	Q23	*A1
C65	B1	Q24	*A1
C66	*A4	Q25	*B4
C67	C4	Q26	*B3
C69	B1	Q27	*B3
C70	*B1	Q28	*A2
C71	*C4	Q29	*A2
C73	*C1	Q30	*C4
C74	*C1	Q31	*C4
C75	C4	Q32	*A1
C76	*C4	Q33	*B3
C77	C4	Q34	*A1
C78	B2	Q35	*B1
C79	*B2	Q36	*B4
C80	*C4	Q37	*A4
C81	B2	Q38	A3
C82	A2	Q39	*A4
C83	*C4	Q40	*A4
C85	*B2	Q41	*A3
C86	*C1	Q42	*B4
C87	B2	Q43	C2
C88	*B2	Q44	C2
C90	*C1	Q45	*C2
C101	C2	Q46	*B2
C102	*B3	Q47	*C2
C103	*C3	Q48	*C2
C104	C3	Q49	*B2
C105	*B3	Q50	C1
		Q51	*C1
D1	*A4	Q53	B1
D2	B1	Q54	*B1
D3	*B3	Q60	*C1
D4	*A2	Q62	*B3
Q63	*C3	R92	*B2
Q64	B3	R93	*C4
Q65	*B3	R94	A1
Q66	*B2	R95	*B3
		R96	*A2
R1	*C1	R97	*C4
R2	*C1	R98	*A1
R3	*C2	R99	*B4
R4	*C2	R100	*A2
R5	*C2	R101	*B1
R6	*C2	R102	*C4
R7	*C2	R103	*A3
R8	*C3	R104	*B3
R9	*C3	R105	*B3
R10	*C2	R106	*A3
R11	*C2	R107	*A4
R12	*C2	R108	*A3
R13	*C2	R109	*A3
R14	*C2	R110	*B4
R15	*C2	R111	*A3
R16	*C2	R112	*B4
R17	*C3	R113	*C1
R18	*C3	R114	*C1
R19	A2	R115	*C1
R20	A2	R116	*C1
R21	*B3	R117	*C1
R22	*A3	R118	*C1
R23	*A1	R119	C2
R24	A2	R120	C2
R25	*A2	R121	C2
R26	*A3	R122	B2
R27	*C3	R123	*B2
R28	*C3	R124	*C2
R29	*A3	R125	C1
R30	*A3	R126	*B2
R31	*C3	R127	*C1
R32	*A2	R128	*B2
R33	*A2	R129	*C1
R34	A3	R130	*B1
R35	A2	R131	*C1
R36	*A3	R132	*C1
R37	*A2	R150	*C1
R38	*A3	R151	*C1
R39	*A2	R154	*A4
R40	*A2	R160	*B3
R41	*A2	R161	*B3
R42	*A1	R162	*B3
R43	*A3	R163	*B3
R44	*A4	R164	*C3
R45	*A4	R165	*C3
R46	*A2	R166	*B3
R47	*A1	R167	*B3
R48	*A4	R168	*B3
R49	*A3	R169	*B2
R50	*A1	R170	*C2
R51	*A2		
R52	*A2	*:B SIDE	
R53	*A2		
R54	*A2		
R55	*A3		
R56	B3		
R57	A4		
R58	A3		
R59	*A3		
R60	*A4		
R61	*A4		
R62	*A3		
R63	*A3		
R64	*A3		
R65	*A4		
R66	*A4		
R67	*A2		
R68	A3		
R69	*C1		
R70	A2		
R71	*B4		
R72	A3		
R73	A2		
R74	*A3		
R75	*B4		
R76	*B3		
R77	*B3		
R78	*B4		
R79	*A3		
R80	*A3		
R81	B1		
R82	*A4		
R83	B1		
R84	B3		
R85	*A3		
R86	*A4		
R87	*A3		
R88	*A2		
R89	*B4		
R90	*B3		
R91	*A3		

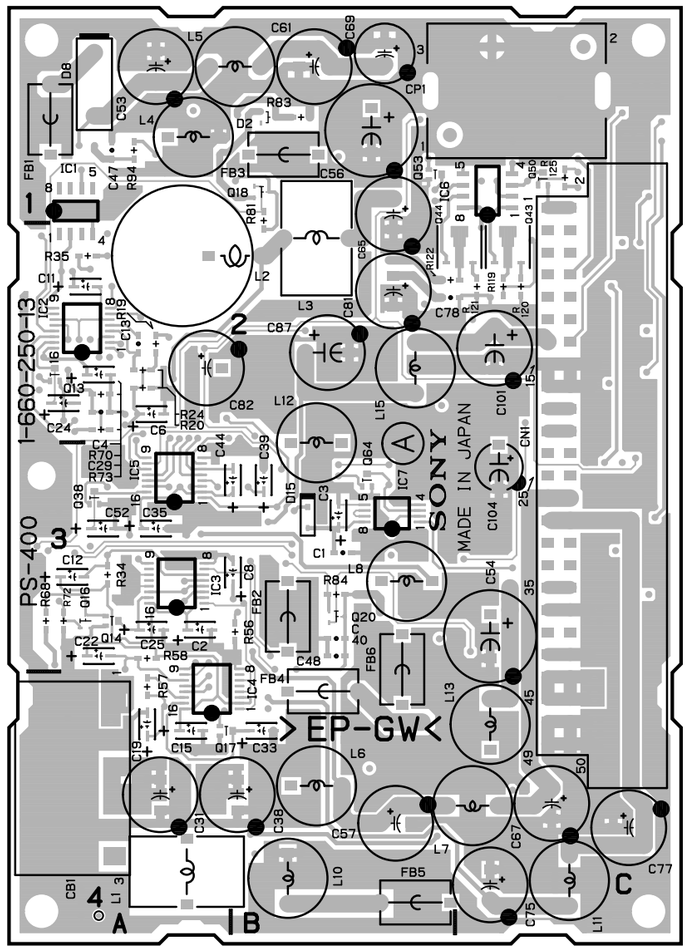

HDC-700 : S/N 10053 through 10077
HDCA-750 : S/N 10096 through 10115

PS-400 -A SIDE-
1-660-250-13

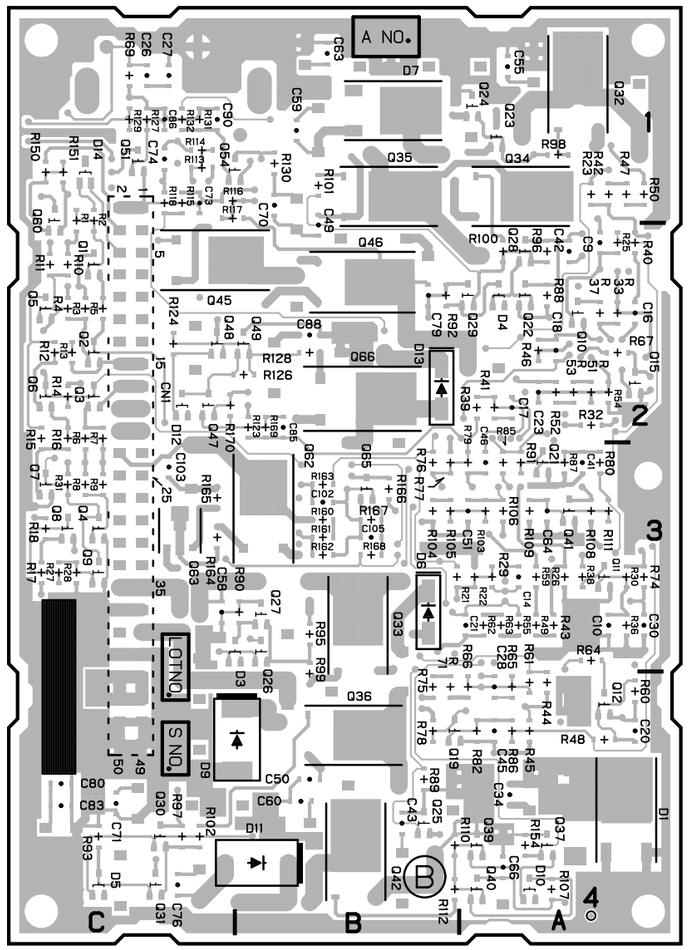

PS-400 -B SIDE-
1-660-250-13

http://getMANUAL.com

PS-400 (1-660-250-12)

CB1	A4	D7	*B1	Q66	*B2	R95	*B3
		D8	A1			R96	*A2
CN1	C3	D9	*B4	R1	*C1	R97	*C4
		D10	*A4	R2	*C1	R98	*A1
CP1	C1	D11	*B4	R3	*C2	R99	*B4
		D12	*C2	R4	*C2	R100	*A2
C2	A3	D13	*B2	R5	*C2	R101	*B1
C4	A2	D17	*C1	R6	*C2	R102	*C4
C6	A2			R7	*C2	R103	*A3
C8	B3	FB1	A1	R8	*C3	R104	*B3
C9	*A2	FB2	B3	R9	*C3	R105	*B3
C10	*A3	FB3	B1	R10	*C2	R106	*A3
C11	A2	FB4	B4	R11	*C2	R107	*A4
C12	A3	FB5	B4	R12	*C2	R108	*A3
C13	A2			R13	*C2	R109	*A3
C14	*A3	IC1	A2	R14	*C2	R110	*B4
C15	A4	IC2	A2	R15	*C2	R111	*A3
C16	*A2	IC3	A3	R16	*C2	R112	*B4
C17	*A2	IC4	B4	R17	*C3	R113	*C1
C18	*A2	IC5	A3	R18	*C3	R114	*C1
C19	A4	IC6	C1	R19	A2	R115	*C1
C20	*A4	IC7	B3	R20	A2	R116	*C1
C21	*A3			R21	*B3	R117	*C1
C22	A3	L1	A4	R22	*A3	R118	*C1
C23	*A2	L2	B2	R23	*A1	R119	C2
C24	A2	L3	B2	R24	A2	R120	C2
C25	A3	L4	A1	R25	*A2	R121	C2
C26	*C1	L5	B1	R26	*A3	R122	B2
C27	*C1	L6	B4	R27	*C3	R123	*B2
C28	*A4	L7	C4	R28	*C3	R124	*C2
C29	A2	L8	B3	R29	*A3	R125	C1
C30	*A3	L10	B4	R30	*A3	R126	*B2
C31	A4	L11	C4	R31	*C3	R127	*C1
C33	B4	L12	B3	R32	*A2	R128	*B2
C34	*A4	L13	C4	R33	*A2	R129	*C1
C35	A3	L14	B3	R34	A3	R130	*B1
C38	B4	L15	B2	R35	A2	R131	*C1
C39	B3			R36	*A3	R132	*C1
C40	B3	Q1	*C2	R37	*A2	R150	*C1
C41	*A3	Q2	*C2	R38	*A3	R151	*C1
C42	*A2	Q3	*C2	R39	*A2	R154	*A4
C43	*B4	Q4	*C3	R40	*A2	R160	*B3
C44	B3	Q5	*C2	R41	*A2	R161	*B3
C45	*A4	Q6	*C2	R42	*A1	R162	*B3
C46	*A3	Q7	*C3	R43	*A3	R163	*B3
C47	A1	Q8	*C3	R44	*A4	R164	*C3
C48	B3	Q9	*C3	R45	*A4	R165	*C3
C49	*B2	Q10	*A2	R46	*A2	R166	*B3
C50	*B4	Q11	*A3	R47	*A1	R167	*B3
C51	*A3	Q12	*A4	R48	*A4	R168	*B3
C52	A3	Q13	A2	R49	*A3	R169	*B2
C53	A1	Q14	A3	R50	*A1	R170	*C2
C54	C3	Q15	*A2	R51	*A2		
C55	*A1	Q16	A3	R52	*A2	*:B SIDE	
C56	B1	Q17	A4	R53	*A2		
C57	B4	Q18	B1	R54	*A2		
C58	*C3	Q19	*B4	R55	*A3		
C59	*B1	Q20	B3	R56	B3		
C60	*B4	Q21	*A3	R57	A4		
C61	B1	Q22	*A2	R58	A3		
C63	*B1	Q23	*A1	R59	*A3		
C64	*A3	Q24	*A1	R60	*A4		
C65	B1	Q25	*B4	R61	*A4		
C66	*A4	Q26	*B3	R62	*A3		
C67	C4	Q27	*B3	R63	*A3		
C69	B1	Q28	*A2	R64	*A3		
C70	*B1	Q29	*A2	R65	*A4		
C71	*C4	Q30	*C4	R66	*A4		
C73	*C1	Q31	*C4	R67	*A2		
C74	*C1	Q32	*A1	R68	A3		
C75	C4	Q33	*B3	R69	*C1		
C76	*C4	Q34	*A1	R70	A2		
C77	C4	Q35	*B1	R71	*B4		
C78	B2	Q36	*B4	R72	A3		
C79	*B2	Q37	*A4	R73	A2		
C80	*C4	Q38	A3	R74	*A3		
C81	B2	Q39	*A4	R75	*B4		
C82	A2	Q40	*A4	R76	*B3		
C83	*C4	Q41	*A3	R77	*B3		
C85	*B2	Q42	*B4	R78	*B4		
C86	*C1	Q43	C2	R79	*A3		
C87	B2	Q44	C2	R80	*A3		
C88	*B2	Q45	*C2	R81	B1		
C90	*C1	Q46	*B2	R82	*A4		
C101	C2	Q47	*C2	R83	B1		
C102	*B3	Q48	*C2	R84	B3		
C103	*C3	Q49	*B2	R85	*A3		
C104	C3	Q50	C1	R86	*A4		
C105	*B3	Q51	*C1	R87	*A3		
		Q53	B1	R88	*A2		
D1	*A4	Q54	*B1	R89	*B4		
D2	B1	Q60	*C1	R90	*B3		
D3	*B3	Q62	*B3	R91	*A3		
D4	*A2	Q63	*C3	R92	*B2		
D5	*C4	Q64	B3	R93	*C4		
D6	*B3	Q65	*B3	R94	A1		

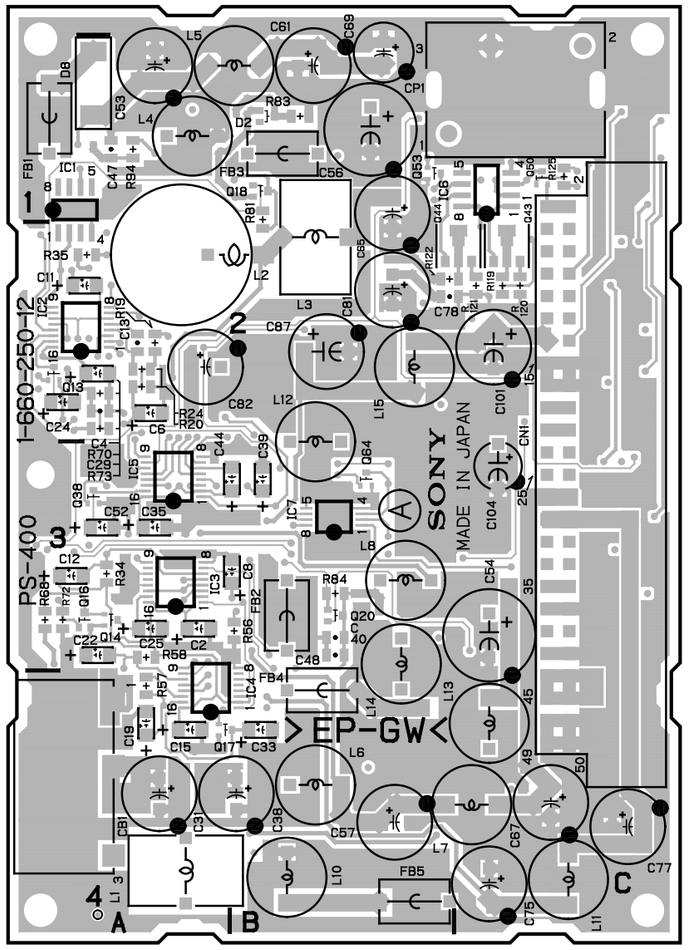

HDC-700 : S/N 10013 through 10052
HDCA-750 : S/N 10041 through 10095

PS-400 -A SIDE-
1-660-250-12

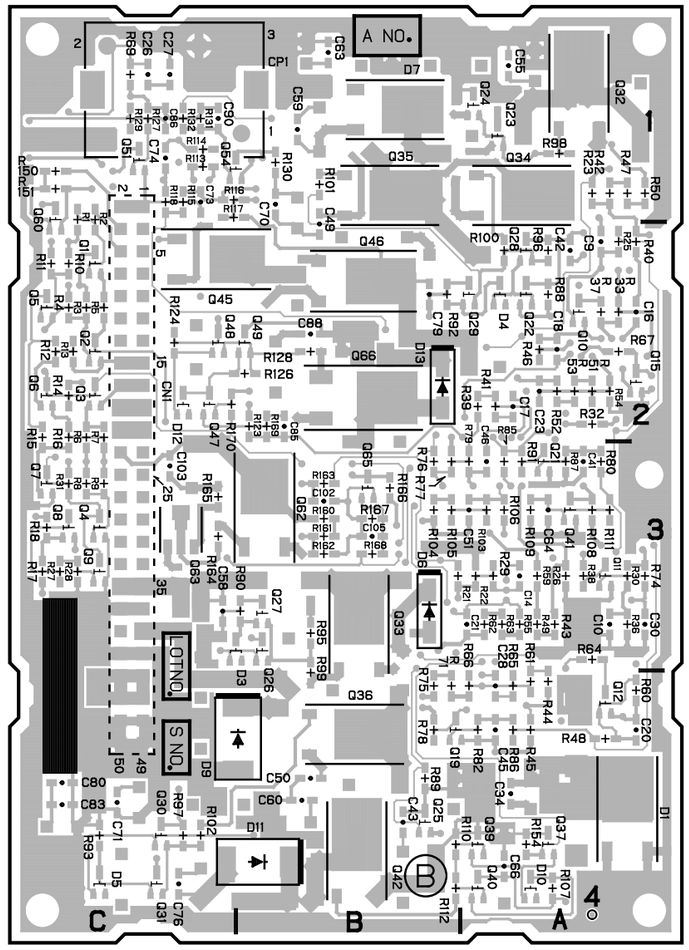

PS-400 -B SIDE-
1-660-250-12

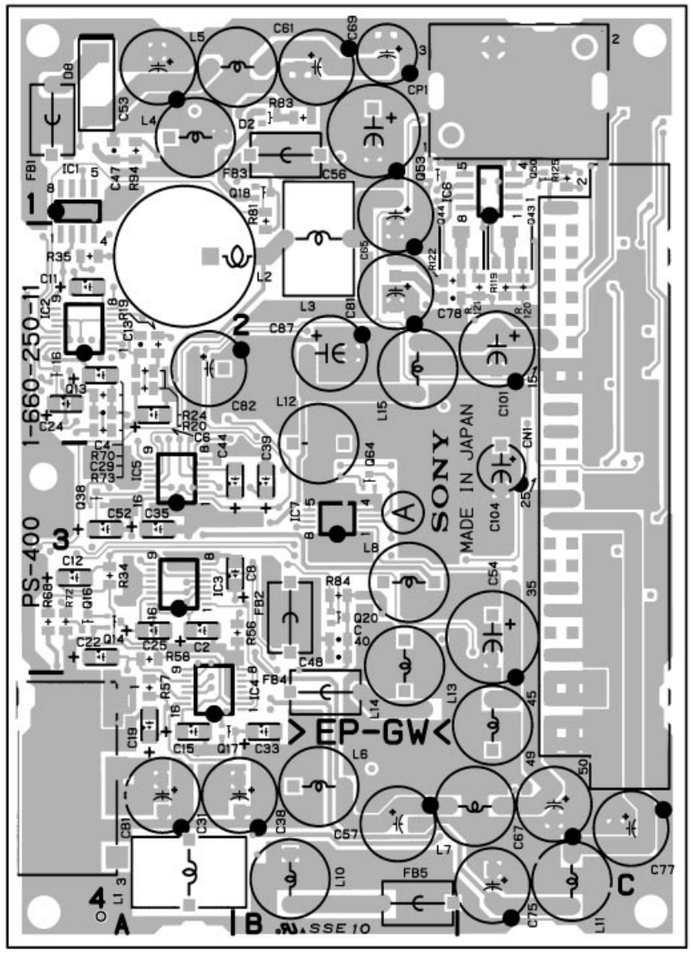

HDC-700 : S/N 10001 through 10012
HDCA-750 : S/N 10001 through 10040

PS-400 -A SIDE-
1-660-250-11

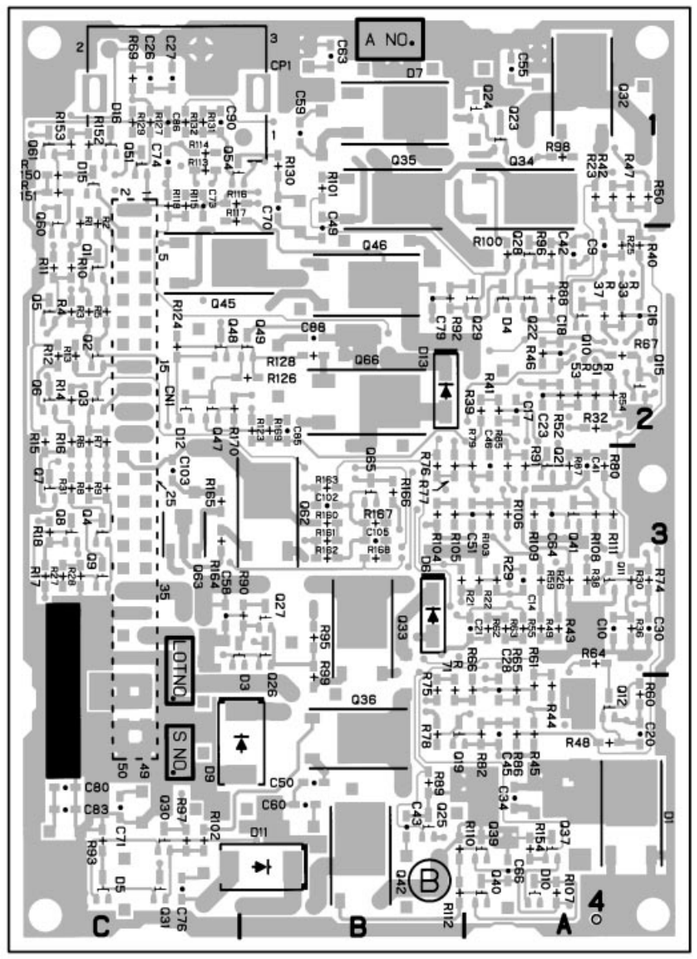

PS-400 -B SIDE-
1-660-250-11

PS-400 (1-660-250-11)

CB1	A4	D7	*B1	R1	*C1	R97	*C4
		D10	*A4	R2	*C1	R98	*A1
CN1	C3	D12	*C2	R3	*C2	R99	*B4
		D13	*B2	R4	*C2	R100	*A2
CP1	C1	D15	*C1	R5	*C2	R101	*B1
		D16	*C1	R6	*C2	R102	*C4
C2	A3			R7	*C2	R103	*A3
C4	A2	FB1	A1	R8	*C3	R104	*B3
C6	A2	FB2	B3	R9	*C3	R105	*B3
C8	B3	FB3	B1	R10	*C2	R106	*A3
C9	*A2	FB4	B4	R11	*C2	R107	*A4
C10	*A3	FB5	B4	R12	*C2	R108	*A3
C11	A2			R13	*C2	R109	*A3
C12	A3	IC1	A2	R14	*C2	R110	*B4
C13	A2	IC2	A2	R15	*C2	R111	*A3
C14	*A3	IC3	A3	R16	*C2	R112	*B4
C15	A4	IC4	B4	R17	*C3	R113	*C1
C16	*A2	IC5	A3	R18	*C3	R114	*C1
C17	*A2	IC6	C1	R19	A2	R115	*C1
C18	*A2	IC7	B3	R20	A2	R116	*C1
C19	A4			R21	*B3	R117	*C1
C20	*A4	L1	A4	R22	*A3	R118	*C1
C21	*A3	L2	B2	R23	*A1	R119	C2
C22	A3	L3	B2	R24	A2	R120	C2
C23	*A2	L4	A1	R25	*A2	R121	C2
C24	A2	L5	B1	R26	*A3	R122	B2
C25	A3	L6	B4	R27	*C3	R123	*B2
C26	*C1	L7	C4	R28	*C3	R124	*C2
C27	*C1	L8	B3	R29	*A3	R125	C1
C28	*A4	L10	B4	R30	*A3	R126	*B2
C29	A2	L11	C4	R31	*C3	R127	*C1
C30	*A3	L12	B3	R32	*A2	R128	*B2
C31	A4	L13	C4	R33	*A2	R129	*C1
C33	B4	L14	B3	R34	A3	R130	*B1
C34	*A4	L15	B2	R35	A2	R131	*C1
C35	A3			R36	*A3	R132	*C1
C38	B4	Q1	*C2	R37	*A2	R150	*C1
C39	B3	Q2	*C2	R38	*A3	R151	*C1
C40	B3	Q3	*C2	R39	*A2	R152	*C1
C41	*A3	Q4	*C3	R40	*A2	R153	*C1
C42	*A2	Q5	*C2	R41	*A2	R154	*A4
C43	*B4	Q6	*C2	R42	*A1	R160	*B3
C44	B3	Q7	*C3	R43	*A3	R161	*B3
C45	*A4	Q8	*C3	R44	*A4	R162	*B3
C46	*A3	Q9	*C3	R45	*A4	R163	*B3
C47	A1	Q10	*A2	R46	*A2	R164	*C3
C48	B3	Q11	*A3	R47	*A1	R165	*C3
C49	*B2	Q12	*A4	R48	*A4	R166	*B3
C50	*B4	Q13	A2	R49	*A3	R167	*B3
C51	*A3	Q14	A3	R50	*A1	R168	*B3
C52	A3	Q15	*A2	R51	*A2	R169	*B2
C53	A1	Q16	A3	R52	*A2	R170	*C2
C54	C3	Q17	A4	R53	*A2		
C55	*A1	Q18	B1	R54	*A2	*:B SIDE	
C56	B1	Q19	*B4	R55	*A3		
C57	B4	Q20	B3	R56	B3		
C58	*C3	Q21	*A3	R57	A4		
C59	*B1	Q22	*A2	R58	A3		
C60	*B4	Q23	*A1	R59	*A3		
C61	B1	Q24	*A1	R60	*A4		
C63	*B1	Q25	*B4	R61	*A4		
C64	*A3	Q26	*B3	R62	*A3		
C65	B1	Q27	*B3	R63	*A3		
C66	*A4	Q28	*A2	R64	*A3		
C67	C4	Q29	*A2	R65	*A4		
C69	B1	Q30	*C4	R66	*A4		
C70	*B1	Q31	*C4	R67	*A2		
C71	*C4	Q32	*A1	R68	A3		
C73	*C1	Q33	*B3	R69	*C1		
C74	*C1	Q34	*A1	R70	A2		
C75	C4	Q35	*B1	R71	*B4		
C76	*C4	Q36	*B4	R72	A3		
C77	C4	Q37	*A4	R73	A2		
C78	B2	Q38	A3	R74	*A3		
C79	*B2	Q39	*A4	R75	*B4		
C80	*C4	Q40	*A4	R76	*B3		
C81	B2	Q41	*A3	R77	*B3		
C82	A2	Q42	*B4	R78	*B4		
C83	*C4	Q43	C2	R79	*A3		
C85	*B2	Q44	C2	R80	*A3		
C86	*C1	Q45	*C2	R81	B1		
C87	B2	Q46	*B2	R82	*A4		
C88	*B2	Q47	*C2	R83	B1		
C90	*C1	Q48	*C2	R84	B3		
C101	C2	Q49	*B2	R85	*A3		
C102	*B3	Q50	C1	R86	*A4		
C103	*C3	Q51	*C1	R87	*A3		
C104	C3	Q53	B1	R88	*A2		
C105	*B3	Q54	*B1	R89	*B4		
		Q60	*C1	R90	*B3		
D1	*A4	Q61	*C1	R91	*A3		
D2	B1	Q62	*B3	R92	*B2		
D3	*B3	Q63	*C3	R93	*C4		
D4	*A2	Q64	B3	R94	A1		
D5	*C4	Q65	*B3	R95	*B3		
D6	*B3	Q66	*B2	R96	*A2		

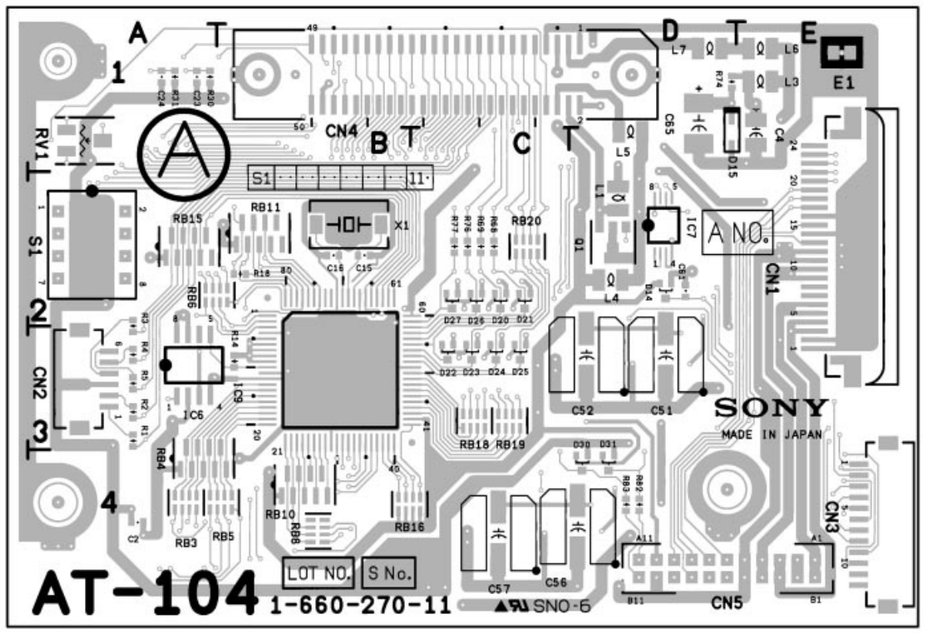

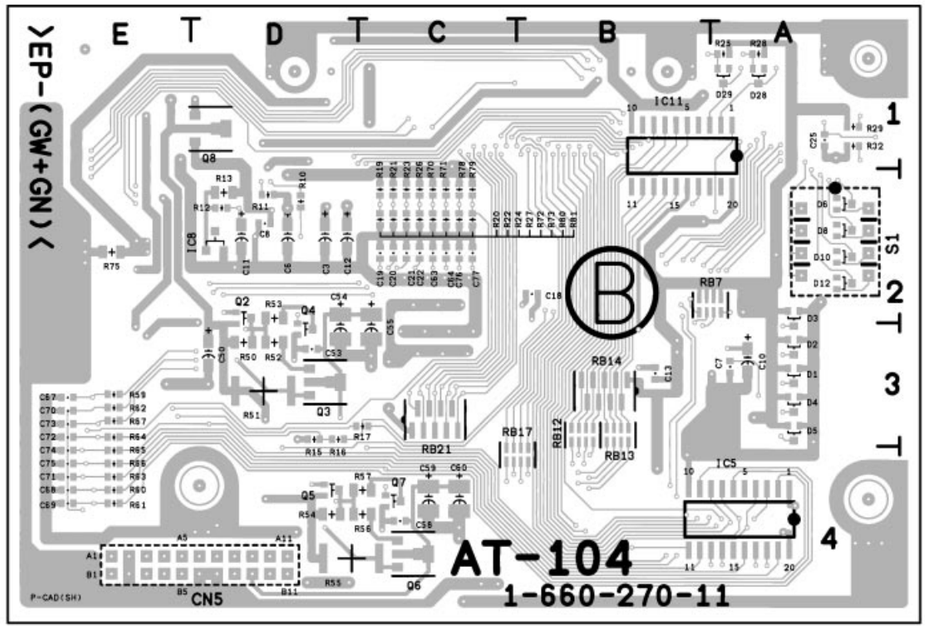

AT-104 -A SIDE-
1-660-270-11

AT-104 -B SIDE-
1-660-270-11

AT-104 (1-660-270-11)

CN1	E2	C56	D4	D20	C2	Q4	*D3	R10	*D2	R60	*E4
CN2	A3	C57	C4	D21	C2	Q5	*D4	R11	*D2	R61	*E4
CN3	E4	C58	*C4	D22	C3	Q6	*C4	R12	*D2	R62	*E3
CN4	C1	C59	*C4	D23	C3	Q7	*C4	R13	*D2	R63	*E4
CN5	D4	C60	*C4	D24	C3	Q8	*D1	R14	B3	R64	*E3
		C61	D2	D25	C3			R15	*D3	R65	*E4
C2	A4	C63	*C2	D26	C2	RB3	A4	R16	*D3	R66	*E4
C3	*D2	C64	*C2	D27	C2	RB4	A4	R17	*C3	R67	*E3
C4	E1	C65	D1	D28	*A1	RB5	B4	R18	B2	R68	C2
C6	*D2	C67	*E3	D29	*A1	RB6	A2	R19	*C2	R69	C2
C7	*A3	C68	*E4	D30	D4	RB7	*A2	R20	*C2	R70	*C2
C8	*D2	C69	*E4	D31	D4	RB8	B4	R21	*C2	R71	*C2
C10	*A3	C70	*E3			RB10	B4	R22	*C2	R72	*C2
C11	*D2	C71	*E4	E1	E1	RB11	B2	R23	*C2	R73	*C2
C12	*D2	C72	*E3			RB12	*B3	R24	*C2	R74	D1
C13	*B3	C73	*E3	IC5	*A4	RB13	*B3	R25	*A1	R75	*E2
C15	B2	C74	*E4	IC6	A3	RB14	*B3	R26	*C2	R76	C2
C16	B2	C75	*E4	IC7	D2	RB15	A2	R27	*C2	R77	C2
C18	*B2	C76	*C2	IC8	*D2	RB16	B4	R28	*A1	R78	*C2
C19	*C2	C77	*C2	IC9	B3	RB17	*B4	R29	*A1	R79	*C2
C20	*C2			IC11	*B1	RB18	C3	R30	A1	R80	*C2
C21	*C2	D1	*A3			RB19	C3	R31	A1	R81	*C2
C22	*C2	D2	*A3	L1	D2	RB20	C2	R32	*A1	R82	D4
C23	A1	D3	*A2	L3	E1	RB21	*C3	R50	*D3	R83	D4
C24	A1	D4	*A3	L4	D2			R51	*D3		
C25	*A1	D5	*A3	L5	D1	RV1	A1	R52	*D3	S1	A2
C50	*D3	D6	*A2	L6	E1			R53	*D2		
C51	D3	D8	*A2	L7	D1	R1	A3	R54	*D4	X1	B2
C52	D3	D10	*A2			R2	A3	R55	*D4		
C53	*D3	D12	*A2	Q1	D2	R3	A3	R56	*C4	*:B SIDE	
C54	*D3	D14	D2	Q2	*D2	R4	A3	R57	*C4		
C55	*C3	D15	D1	Q3	*D3	R5	A3	R59	*E3		

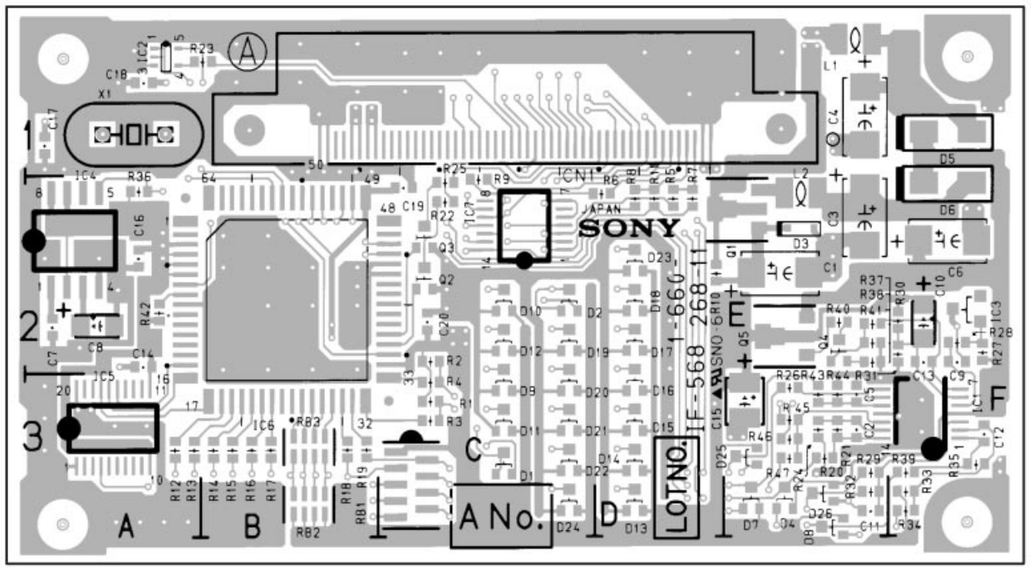

IF-568 -A SIDE-
1-660-268-11

IF-568 (1-660-268-11)

CN1	C1	D10	C2	Q4	E2	R26	E3
		D11	C3	Q5	E2	R27	F2
C1	E2	D12	C2			R28	F2
C2	E3	D13	D3	RB1	C3	R29	E3
C3	E2	D14	D3	RB2	B3	R30	F2
C4	E1	D15	D3	RB3	B3	R31	F2
C5	E3	D16	D3			R32	E3
C6	F2	D17	D2	R1	C3	R33	F3
C7	A2	D18	D2	R2	C2	R34	F3
C8	A2	D19	C2	R3	C3	R35	F3
C9	F2	D20	C3	R4	C3	R36	A2
C10	F2	D21	C3	R5	D2	R37	E2
C11	E3	D22	C3	R6	D2	R38	E2
C12	F3	D23	D2	R7	D2	R39	F3
C13	F2	D24	C3	R8	D2	R40	E2
C14	A2	D25	E3	R9	C2	R41	E2
C15	E3	D26	E3	R10	D2	R42	A2
C16	A2			R11	D2	R43	E3
C17	A1	IC1	F3	R12	A3	R44	E3
C18	A1	IC2	A1	R13	A3	R45	E3
C19	C2	IC3	F2	R14	B3	R46	E3
C20	C2	IC4	A2	R15	B3	R47	E3
		IC5	A3	R16	B3		
D1	C3	IC6	B2	R17	B3	X1	A1
D2	C2	IC7	C2	R18	B3		
D3	E2			R19	B3		
D4	E3	L1	E1	R20	E3		
D5	F1	L2	E2	R21	E3		
D6	F2			R22	C2		
D7	E3	Q1	E2	R23	B1		
D8	E3	Q2	C2	R24	E3		
D9	C3	Q3	C2	R25	C2		

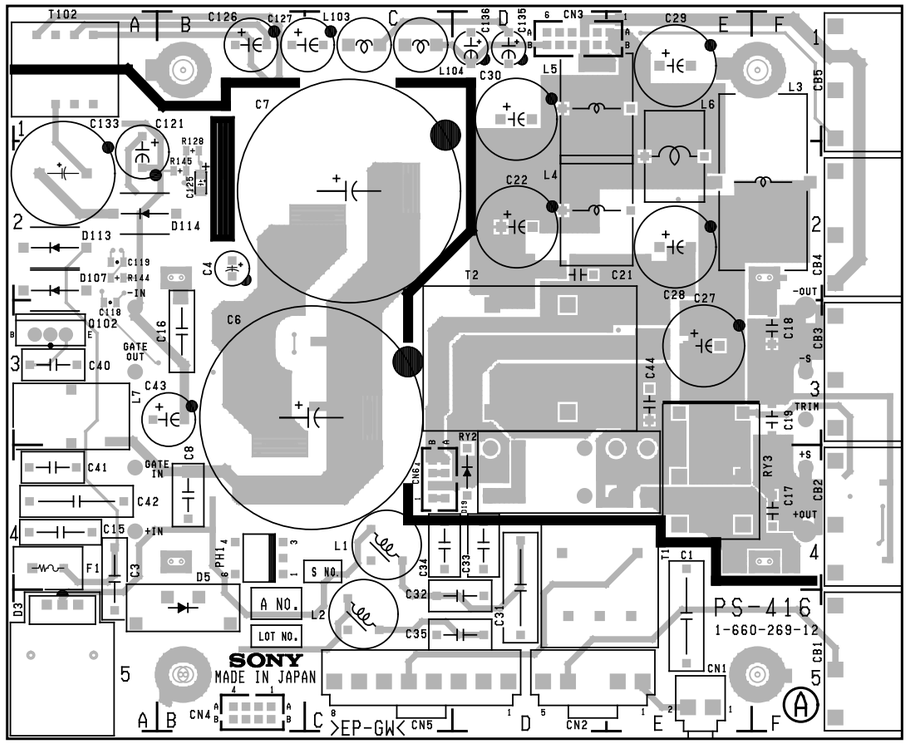

HDC-700 : S/N 10013 and Higher

PS-416 -A SIDE-
1-660-269-12

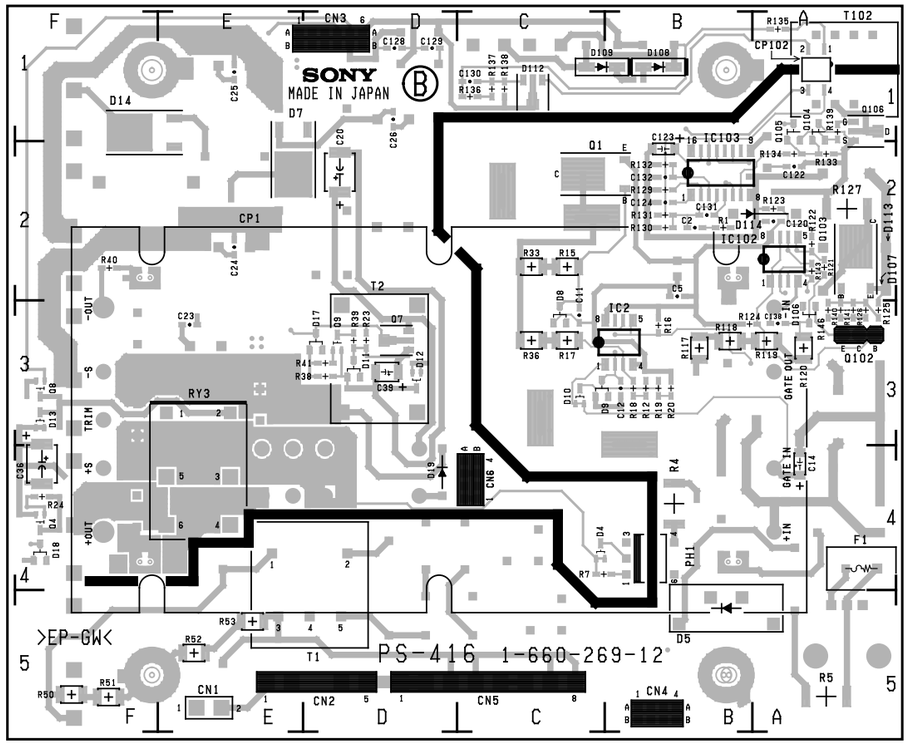

PS-416 -B SIDE-
1-660-269-12

PS-416 (1-660-269-12)

CB1	F5	C14	*A4	C40	A3	D3	A5	IC2	*B3	Q104	*A1	R41	*D3	R136	*C1
CB2	F4	C15	A4	C41	A4	D4	*C4	IC102	*A2	Q105	*A1	R50	*F5	R137	*C1
CB3	F3	C16	B3	C42	A4	D5	B5	IC103	*B2	Q106	*A1	R51	*F5	R138	*C1
CB4	F2	C17	F4	C43	B3	D7	*E2					R52	*E5	R139	*A1
CB5	F1	C18	F3	C44	E3	D8	*C3	L1	C4	RY2	D4	R53	*E5	R140	*A3
		C19	F3	C118	A3	D9	*C3	L2	C5	RY3	E4	R117	*B3	R141	*A3
CN1	E5	C20	*D2	C119	A2	D10	*C3	L3	F2			R118	*B3	R143	*A2
CN2	D5	C21	D2	C120	*A2	D11	*D3	L4	D2	R4	*B4	R119	*A3	R144	A2
CN3	D1	C22	D2	C121	A2	D12	*D3	L5	D1	R5	*A5	R120	*A3	R145	B2
CN4	B5	C23	*E3	C122	*A2	D13	*F3	L6	E2	R7	*C4	R121	*A2	R146	*A3
CN5	C5	C24	*E2	C123	*B2	D14	*F1	L7	A3	R12	*B3	R122	*A2		
CN6	C4	C25	*E1	C124	*B2	D17	*D3	L103	C1	R15	*C2	R123	*A2	T1	D4
		C26	*D1	C125	B2	D18	*F4	L104	C1	R16	*B3	R124	*B3	T2	D3
CP102	*A1	C27	E3	C126	B1	D19	D4			R17	*C3	R125	*A3		
		C28	E2	C127	C1	D106	*A3	PH1	B4	R18	*B3	R126	*A3	*:B SIDE	
C1	E5	C29	E1	C128	*D1	D107	A2			R19	*B3	R127	*A2		
C3	A4	C30	D1	C129	*D1	D108	*B1	Q1	*C2	R20	*B3	R128	B2		
C4	B2	C31	D4	C130	*C1	D109	*C1	Q4	*F4	R23	*D3	R129	*B2		
C5	*B2	C32	D5	C131	*B2	D112	*C1	Q7	*D3	R24	*F4	R130	*B2		
C6	C3	C33	D4	C132	*B2	D113	A2	Q8	*F3	R33	*C2	R131	*B2		
C7	C2	C34	C4	C133	A2	D114	A2	Q9	*D3	R36	*C3	R132	*B2		
C8	B4	C35	D5	C135	D1			Q102	A3	R38	*D3	R133	*A2		
C11	*C3	C36	*F4	C136	D1	F1	A4	Q103	*A2	R39	*D3	R134	*A2		
C12	*B3	C39	*D3	C138	*A3					R40	*F2	R135	*A1		

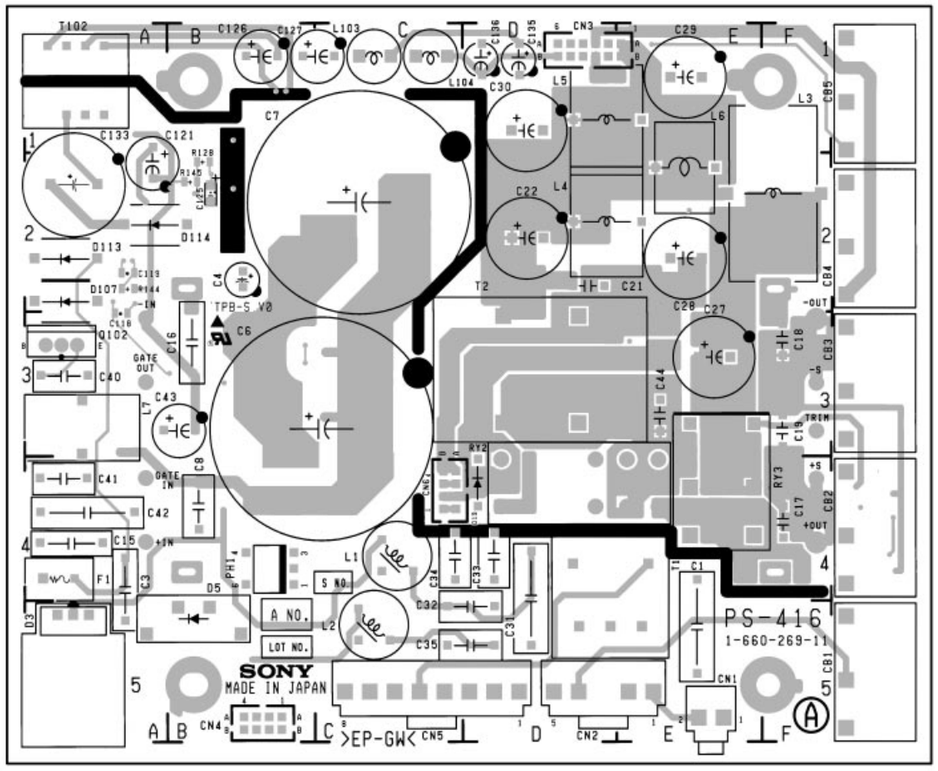

HDC-700 : S/N 10001 through 10012

PS-416 -A SIDE-
1-660-269-11

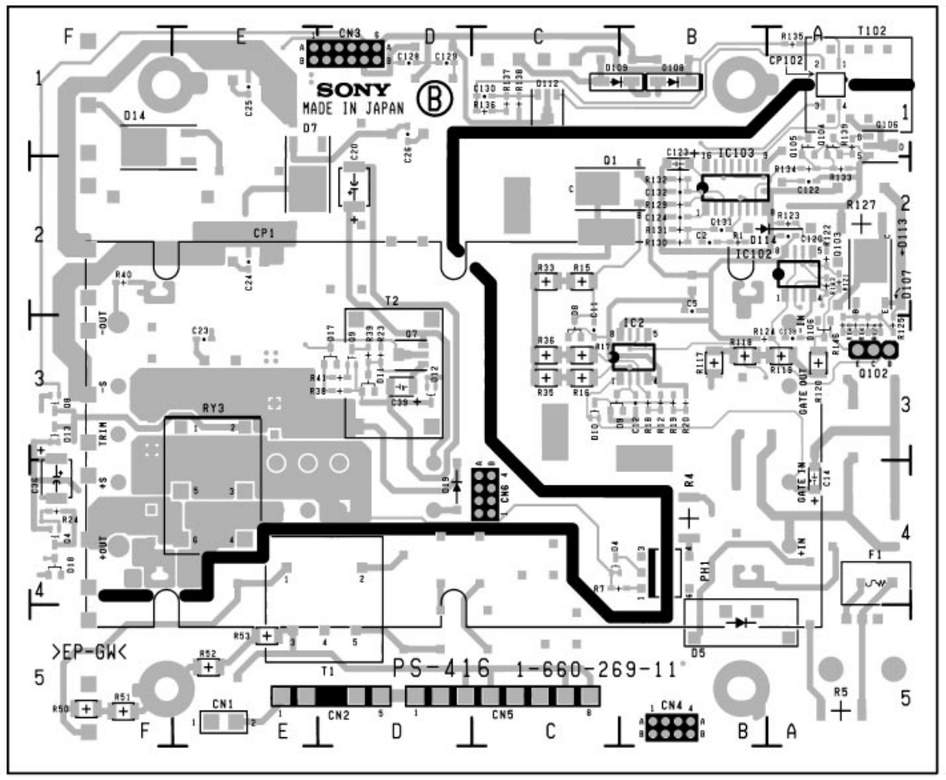

PS-416 -B SIDE-
1-660-269-11

PS-416 (1-660-269-11)

CB1	F5	C14	*A4	C40	A3	D3	A5	IC2	*B3	Q104	*A1	R40	*F2	R135	*A1
CB2	F4	C15	A4	C41	A4	D4	*C4	IC102	*A2	Q105	*A1	R41	*D3	R136	*C1
CB3	F3	C16	B3	C42	A4	D5	B5	IC103	*B2	Q106	*A1	R50	*F5	R137	*C1
CB4	F2	C17	F4	C43	B3	D7	*E2					R51	*F5	R138	*C1
CB5	F1	C18	F3	C44	E3	D8	*C3	L1	C4	RY2	D4	R52	*E5	R139	*A1
		C19	F3	C118	A3	D9	*C3	L2	C5	RY3	E4	R53	*E5	R140	*A3
CN1	E5	C20	*D2	C119	A2	D10	*C3	L3	F2			R117	*B3	R141	*A3
CN2	D5	C21	D2	C120	*A2	D11	*D3	L4	D2	R4	*B4	R118	*B3	R143	*A2
CN3	D1	C22	D2	C121	A2	D12	*D3	L5	D1	R5	*A5	R119	*A3	R144	A2
CN4	B5	C23	*E3	C122	*A2	D13	*F3	L6	E2	R7	*C4	R120	*A3	R145	B2
CN5	C5	C24	*E2	C123	*B2	D14	*F1	L7	A3	R12	*B3	R121	*A2	R146	*A3
CN6	C4	C25	*E1	C124	*B2	D17	*D3	L103	C1	R15	*C2	R122	*A2		
		C26	*D1	C125	B2	D18	*F4	L104	C1	R16	*C3	R123	*A2	T1	D4
CP102	*A1	C27	E3	C126	B1	D19	D4			R17	*C3	R124	*B3	T2	D3
		C28	E2	C127	C1	D106	*A3	PH1	B4	R18	*B3	R125	*A3		
C1	E5	C29	E1	C128	*D1	D107	A2			R19	*B3	R126	*A3	*:B SIDE	
C3	A4	C30	D1	C129	*D1	D108	*B1	Q1	*C2	R20	*B3	R127	*A2		
C4	B2	C31	D4	C130	*C1	D109	*C1	Q4	*F4	R23	*D3	R128	B2		
C5	*B2	C32	D5	C131	*B2	D112	*C1	Q7	*D3	R24	*F4	R129	*B2		
C6	C3	C33	D4	C132	*B2	D113	A2	Q8	*F3	R33	*C2	R130	*B2		
C7	C2	C34	C4	C133	A2	D114	A2	Q9	*D3	R35	*C3	R131	*B2		
C8	B4	C35	D5	C135	D1			Q102	A3	R36	*C3	R132	*B2		
C11	*C3	C36	*F4	C136	D1	F1	A4	Q103	*A2	R38	*D3	R133	*A2		
C12	*B3	C39	*D3	C138	*A3					R39	*D3	R134	*A2		

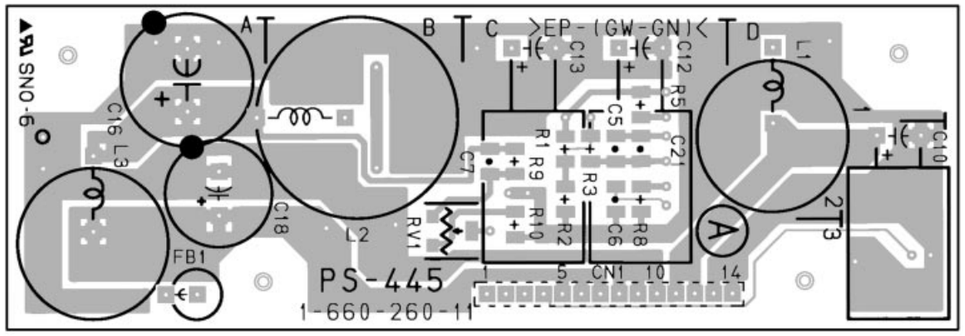

PS-445 -A SIDE-
1-660-260-11

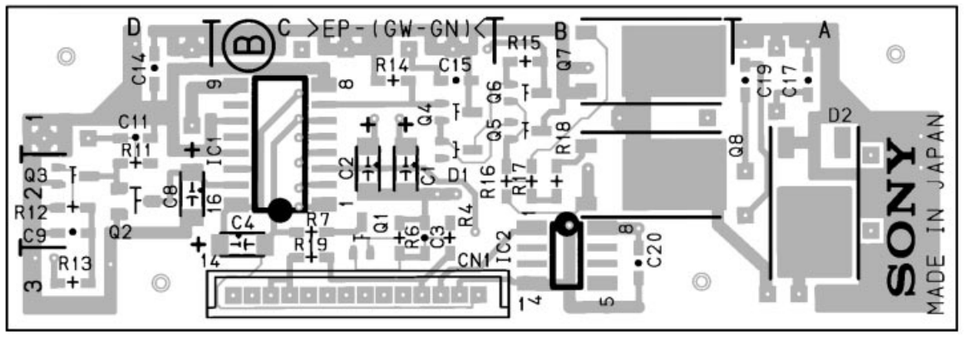

HDC-700

PS-445 -B SIDE-
1-660-260-11

PS-445 (1-660-260-11)

CN1	*C3	D1	*C1	R1	C2
		D2	*A2	R2	C2
C1	*C2			R3	C2
C2	*C2	FB1	A3	R4	*C2
C3	*C2			R5	C1
C4	*C2	IC1	*C2	R6	*C2
C5	C2	IC2	*B2	R7	*C2
C6	C2			R8	C2
C7	C2	L1	D1	R9	C2
C8	*D2	L2	B1	R10	C3
C9	*D2	L3	A2	R11	*D2
C10	D2			R12	*D2
C11	*D1	Q1	*C2	R13	*D3
C12	C1	Q2	*D2	R14	*C1
C13	C1	Q3	*D2	R15	*B1
C14	*D1	Q4	*C1	R16	*B2
C15	*C1	Q5	*B1	R17	*B2
C16	A1	Q6	*B1	R18	*B2
C17	*A1	Q7	*B1	R19	*C3
C18	A2	Q8	*B2		
C19	*A1			*:B SIDE	
C20	*B3	RV1	B3		
C21	C2				

http://getMANUAL.com

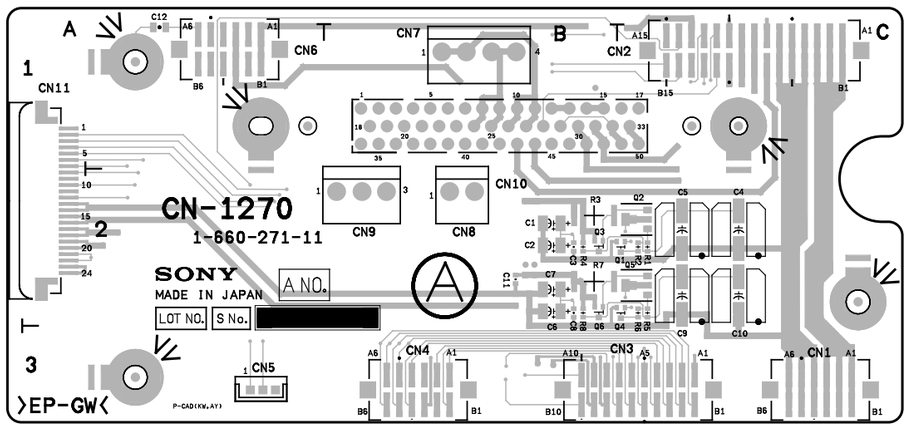

CN-1270 -A SIDE-
1-660-271-11

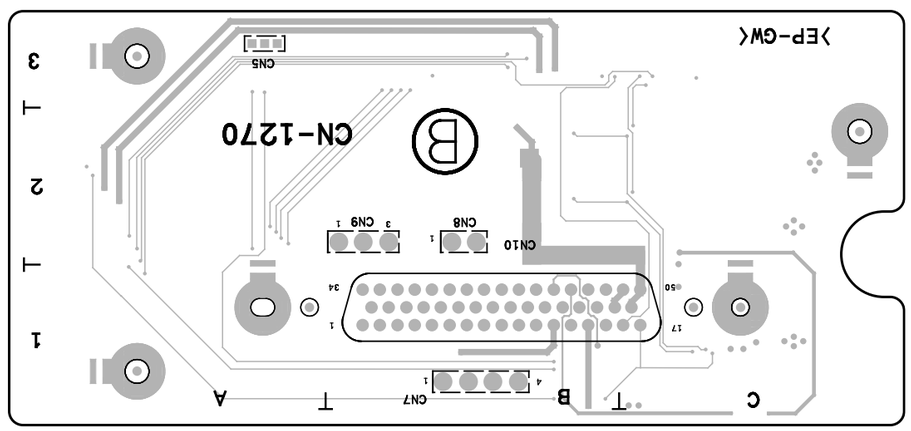

HDC-700

CN-1270 -B SIDE-
1-660-271-11

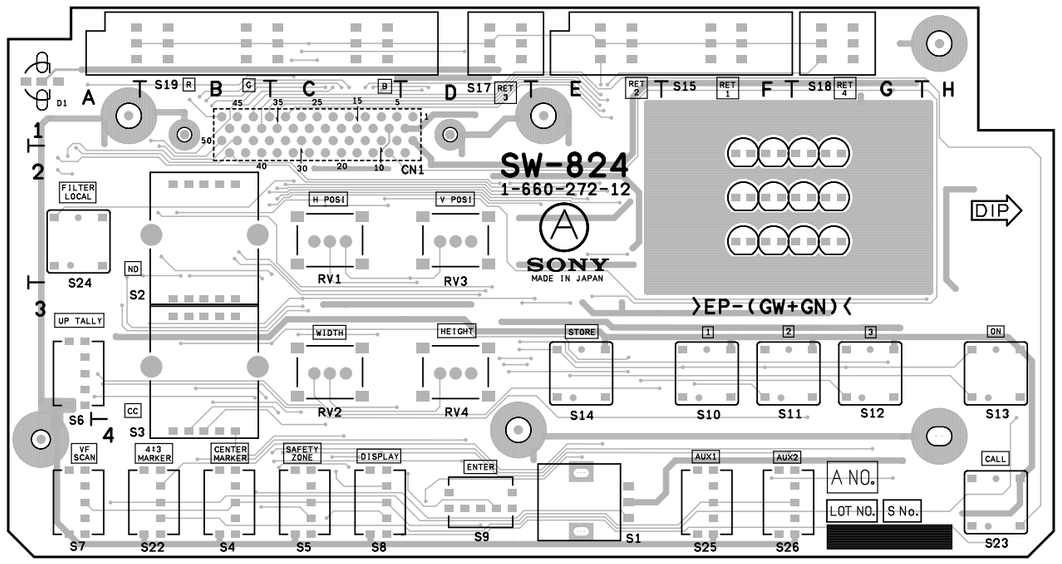

SW-824 -A SIDE-
1-660-272-12

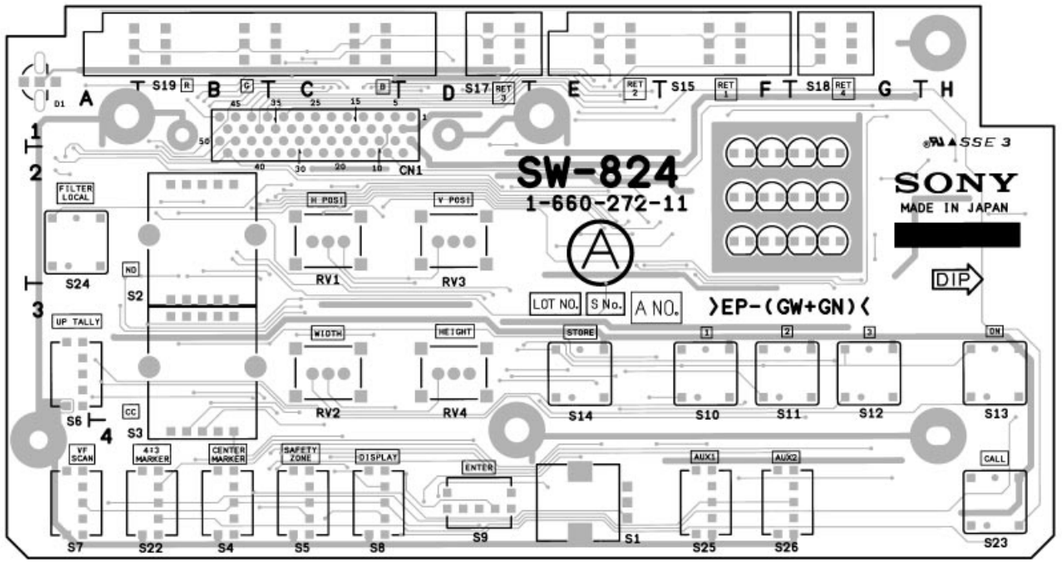

SW-824 -A SIDE-
1-660-272-11

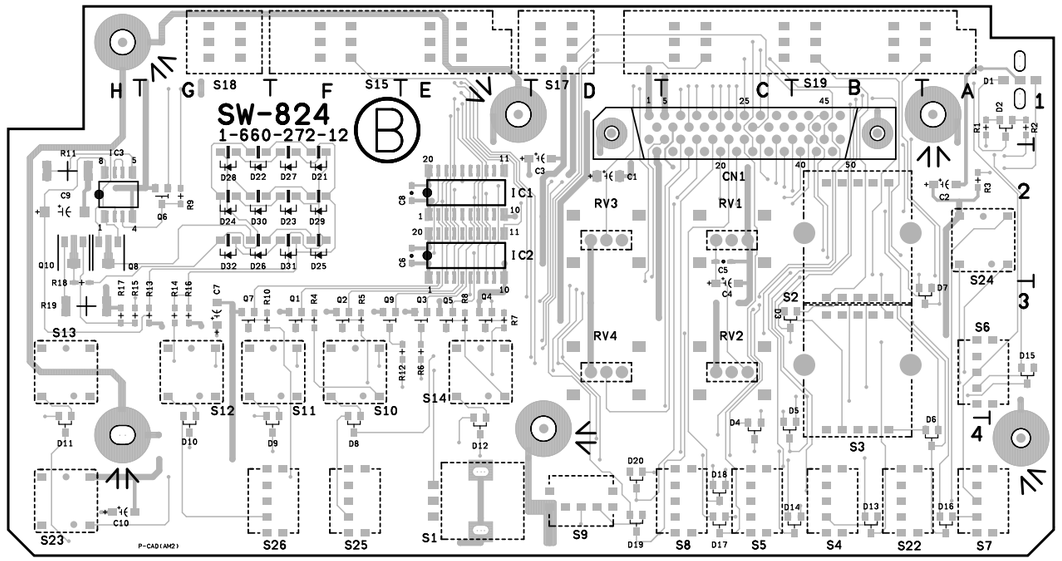

HDC-700 : S/N 10053 and Higher

SW-824 (1-660-272-12)

SW-824 -B SIDE-
1-660-272-12

CN1	*C1	C10	*H4	D10	*G4	D21	F2	D32	G2	Q6	*G2	R1	*A1	R12	*E3	S3	B3	S14	E3
				D11	*H4	D22	G2			Q7	*G3	R2	*A1	R13	*G3	S4	B4	S15	F1
C1	*D2	D1	A1	D12	*E4	D23	F2	IC1	*E2	Q8	*H2	R3	*A2	R14	*G3	S5	C4	S17	D1
C2	*A2	D2	*A1	D13	*B4	D24	G2	IC2	*E2	Q9	*F3	R4	*F3	R15	*H3	S6	A3	S18	G1
C3	*D2	D3	*C3	D14	*B4	D25	F2	IC3	*H2	Q10	*H2	R5	*F3	R16	*G3	S7	A4	S19	B1
C4	*C3	D4	*C4	D15	*A3	D26	G2					R6	*E3	R17	*H3	S8	C4	S22	B4
C5	*C2	D5	*C4	D16	*A4	D27	F2	Q1	*F3	RV1	C2	R7	*E3	R18	*H3	S9	D4	S23	H4
C6	*E2	D6	*A4	D17	*C4	D28	G2	Q2	*F3	RV2	C3	R8	*E3	R19	*H3	S10	F3	S24	A2
C7	*G3	D7	*A3	D18	*C4	D29	F2	Q3	*E3	RV3	D2	R9	*G2			S11	F3	S25	F4
C8	*E2	D8	*F4	D19	*D4	D30	G2	Q4	*E3	RV4	D3	R10	*G3	S1	E4	S12	G3	S26	G4
C9	*H2	D9	*F4	D20	*D4	D31	F2	Q5	*E3			R11	*H2	S2	B2	S13	H3		

*:B SIDE

HDC-700 : S/N 10001 through 10052

SW-824 (1-660-272-11)

SW-824 -B SIDE-
1-660-272-11

CN1	*C1	C10	*H4	D10	*G4	D21	F2	D32	G2	Q6	*G1	R1	*A1	R12	*F3	S9	D4	S23	H4
				D11	*H4	D22	G2			Q7	*F3	R2	*A1	R13	*G3	S10	F3	S24	A2
C1	*D2	D1	A1	D12	*E4	D23	F2	IC1	*E2	Q8	*H2	R3	*A2			S11	F3	S25	F4
C2	*A2	D2	*A1	D13	*B4	D24	G2	IC2	*E2	Q9	*F3	R4	*E3	S1	E4	S12	G3	S26	G4
C3	*E2	D3	*C3	D14	*B4	D25	F2	IC3	*H2	Q10	*H3	R5	*E3	S2	B2	S13	H3		
C4	*C3	D4	*C4	D15	*A3	D26	G2					R6	*E3	S3	B3	S14	E3	*:B SIDE	
C5	*C2	D5	*C4	D16	*A4	D27	F2	Q1	*E3	RV1	C2	R7	*E3	S4	B4	S15	F1		
C6	*F2	D6	*A4	D17	*C4	D28	G2	Q2	*E3	RV2	C3	R8	*E3	S5	C4	S17	D1		
C7	*F3	D7	*A3	D18	*C4	D29	F2	Q3	*E3	RV3	D2	R9	*G1	S6	A3	S18	G1		
C8	*F2	D8	*F4	D19	*D4	D30	G2	Q4	*E3	RV4	D3	R10	*F3	S7	A4	S19	B1		
C9	*H2	D9	*F4	D20	*D4	D31	F2	Q5	*E3			R11	*G2	S8	C4	S22	B4		

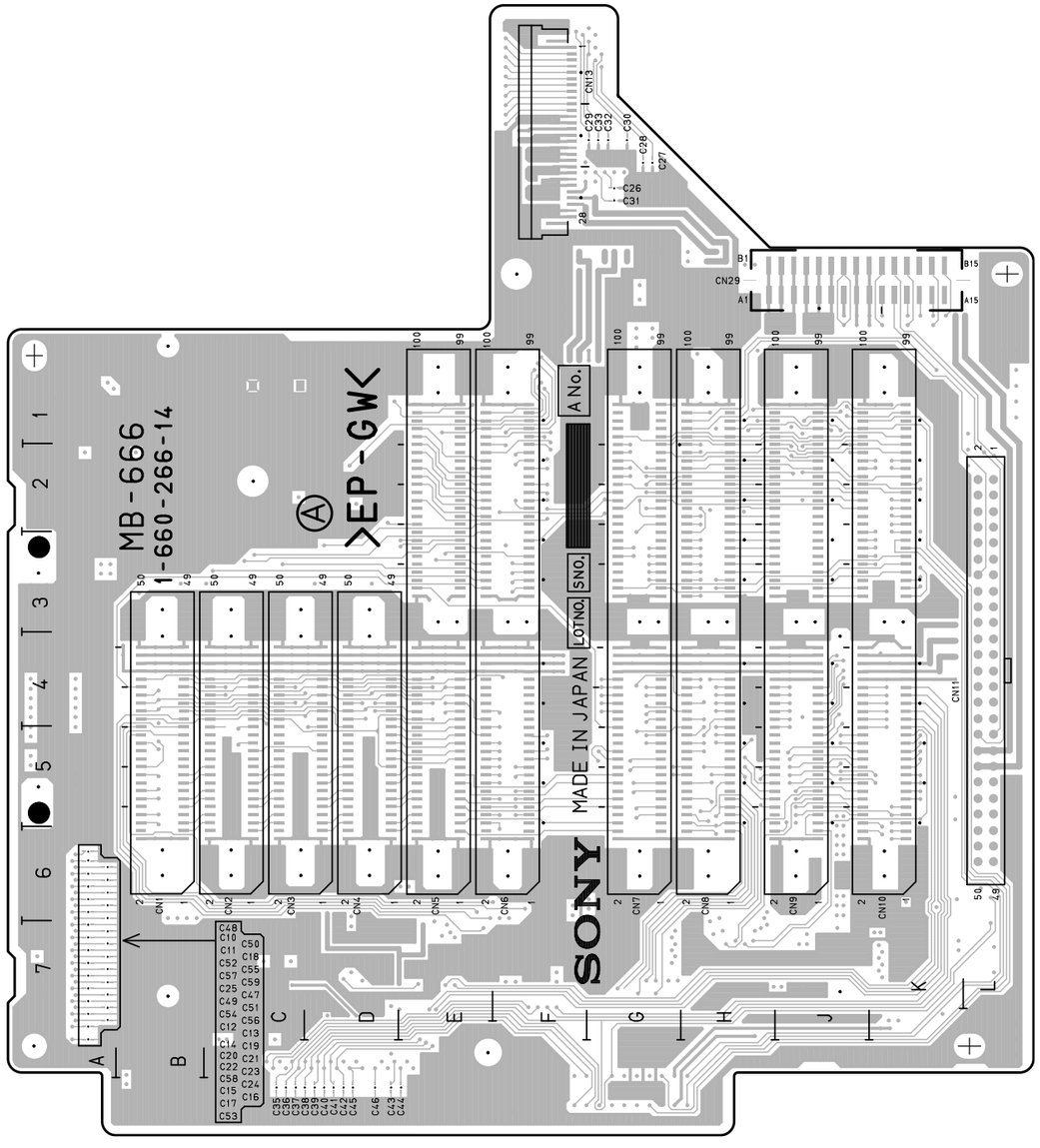

HDC-700 : S/N 10053 and Higher

MB-666 -A SIDE-
1-660-266-14

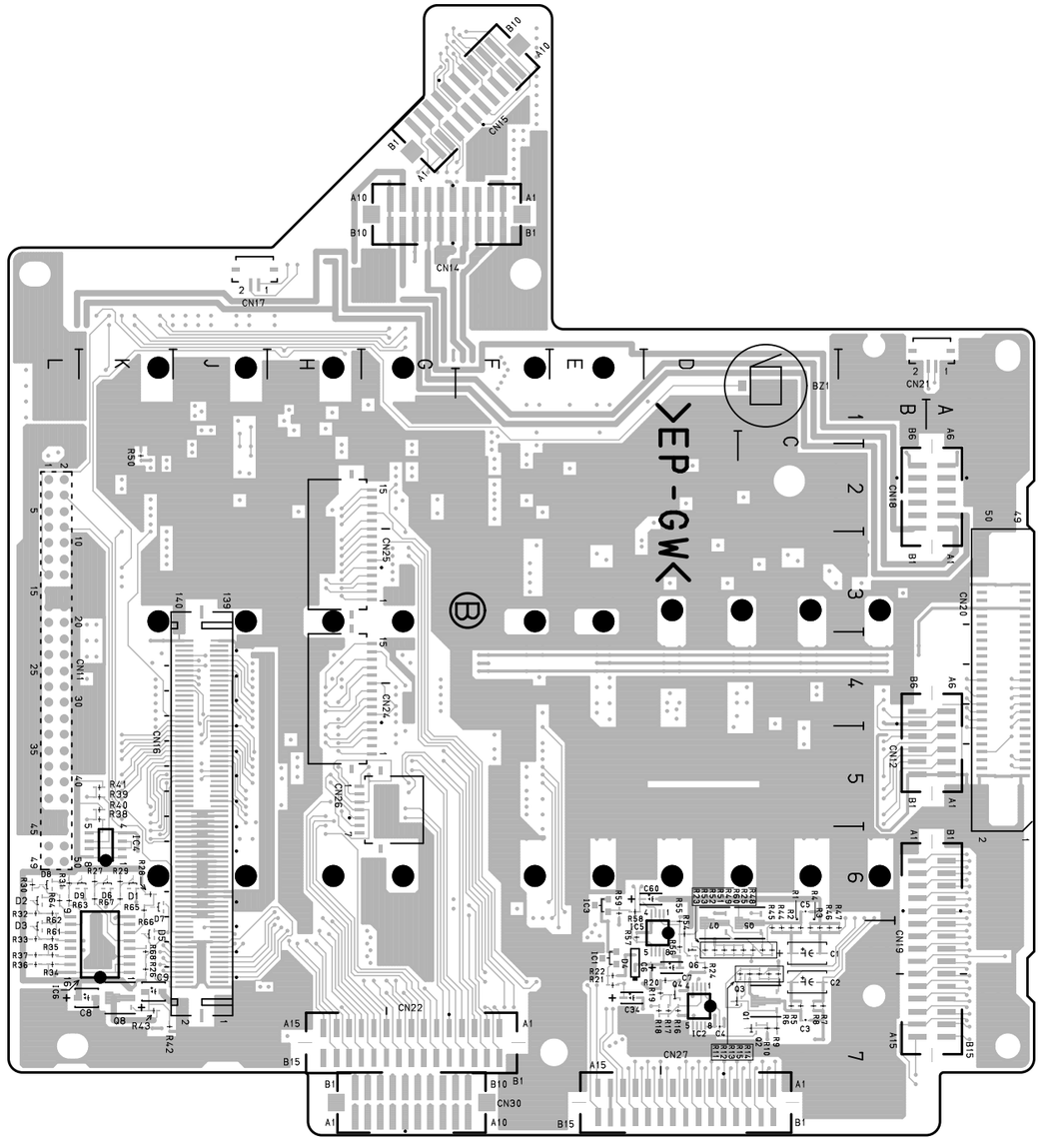

MB-666 -B SIDE-
1-660-266-14

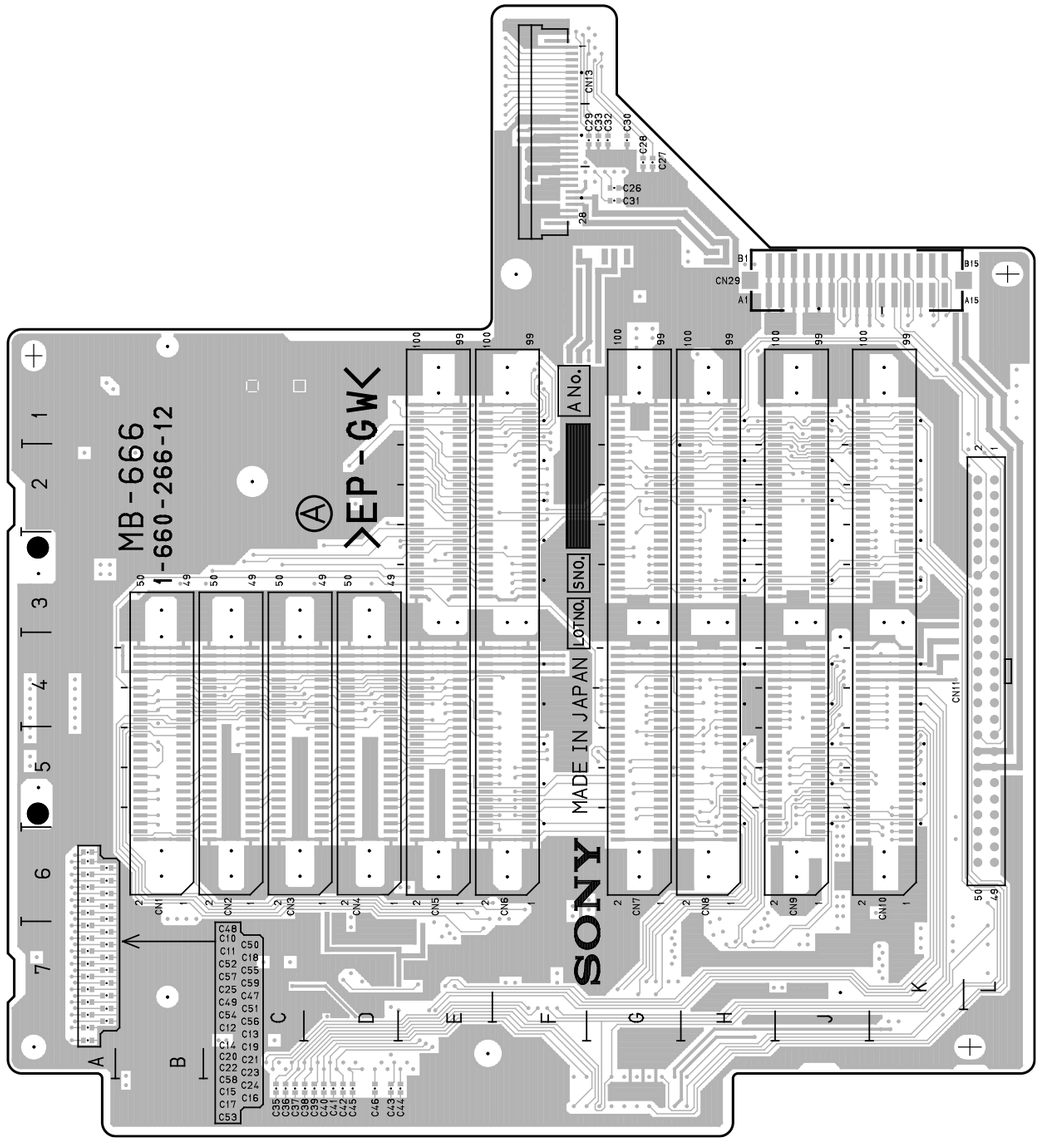

HDC-700 : S/N 10013 through 10052

MB-666 -A SIDE-
1-660-266-12

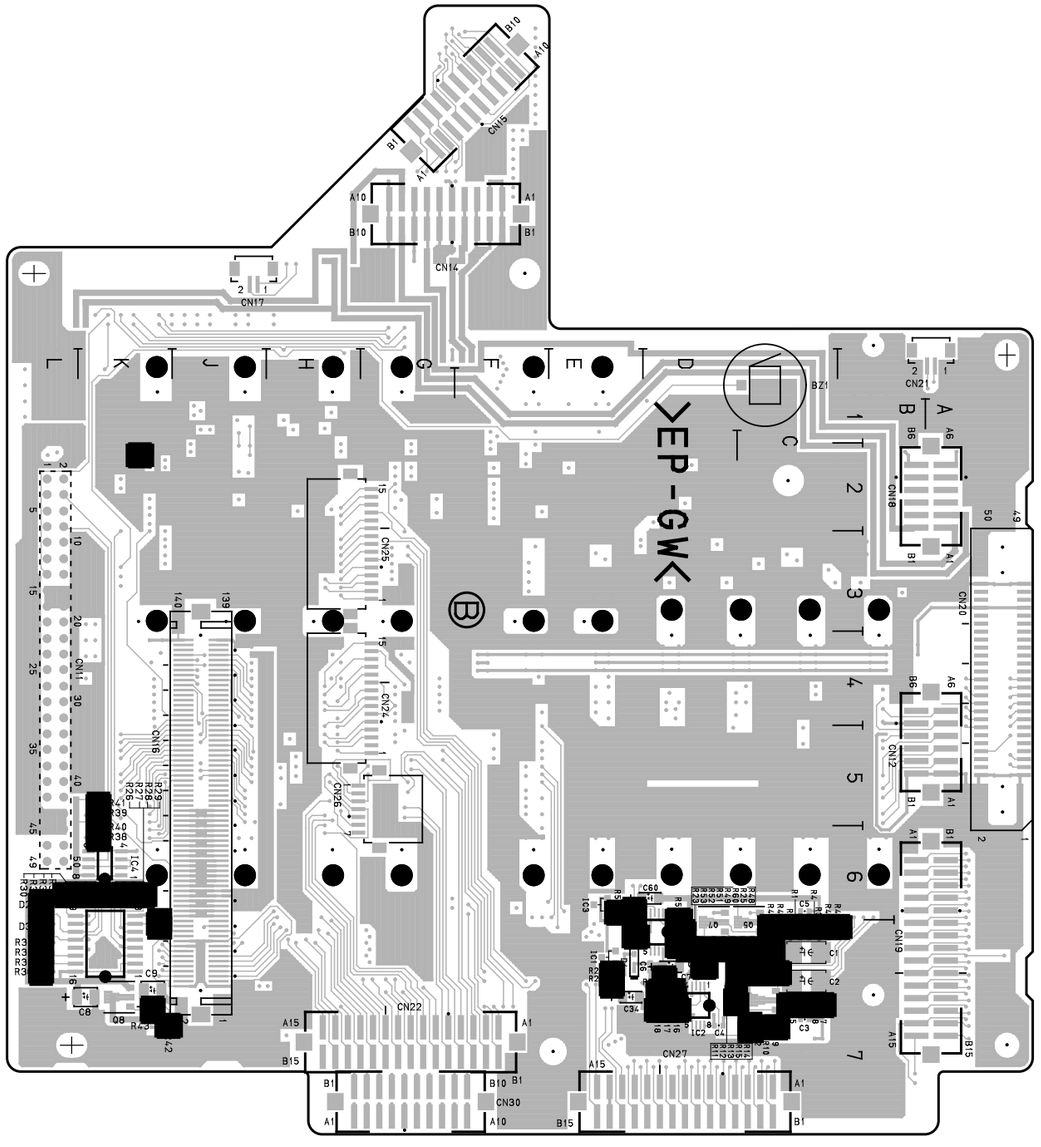

MB-666 -B SIDE-
1-660-266-12

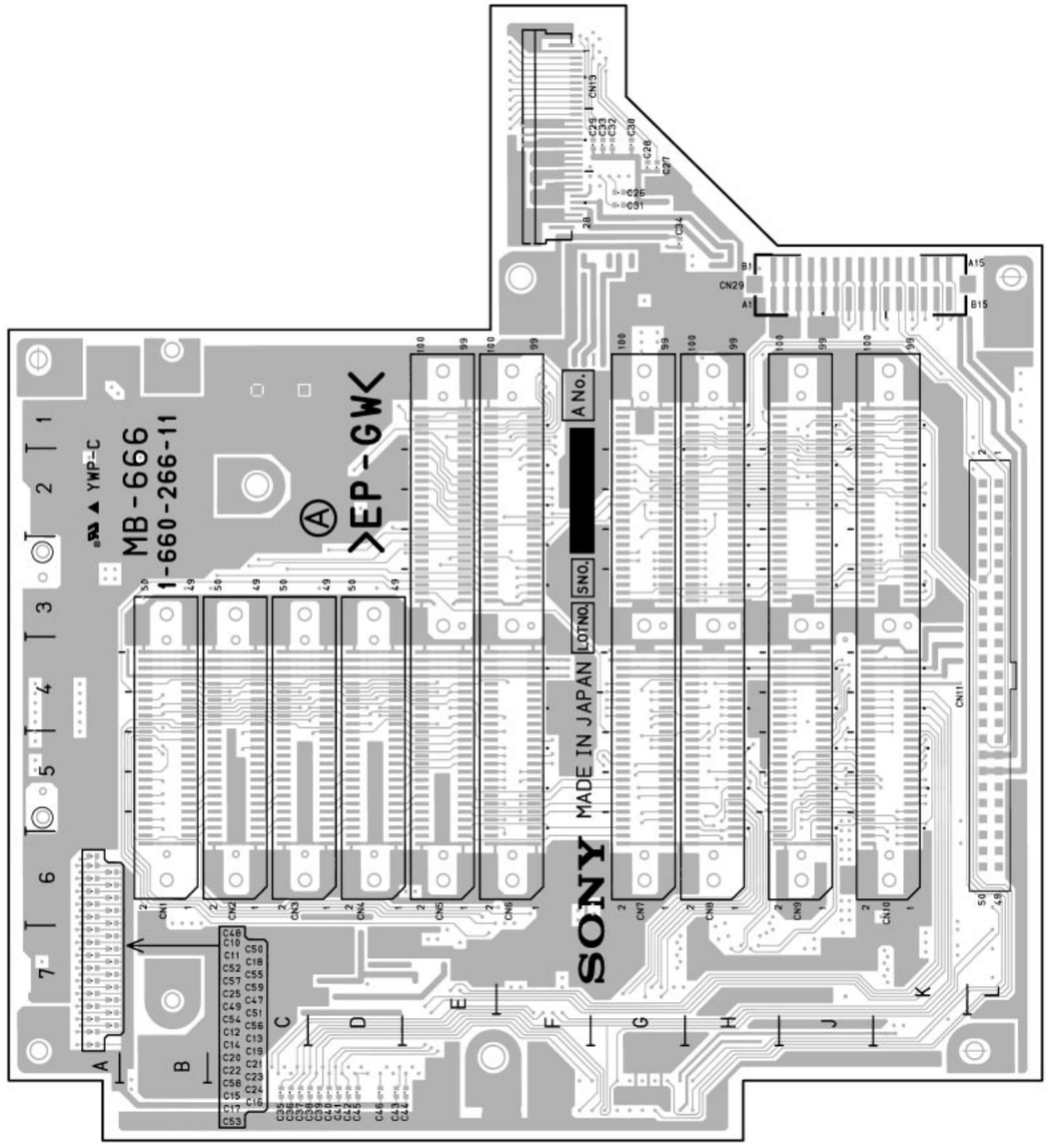

HDC-700 : S/N 10001 through 10012

MB-666 -A SIDE-
1-660-266-11

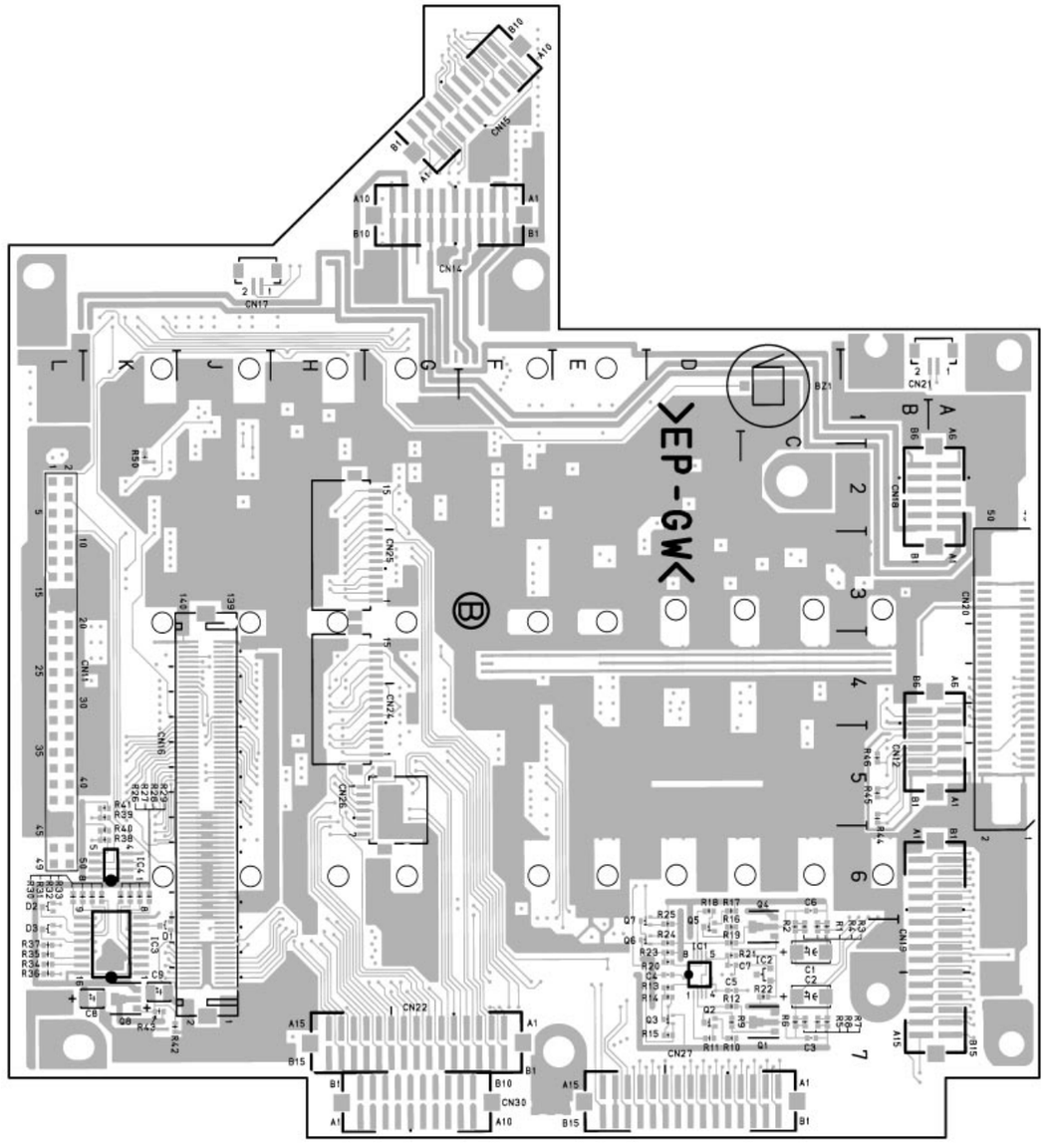

MB-666 -B SIDE-
1-660-266-11

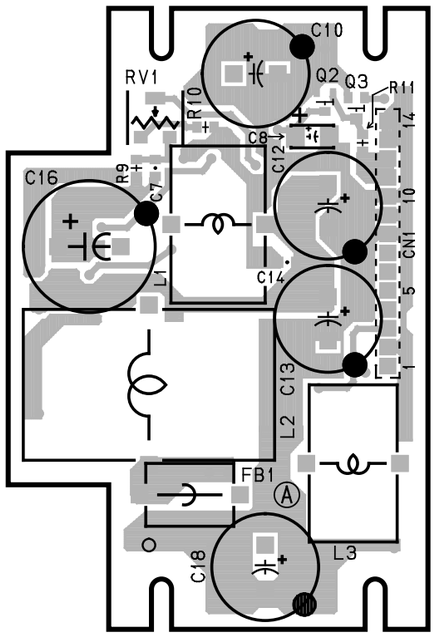

HDC-750 :
S/N 10041 and Higher

PS-419 -A SIDE-
1-660-242-12

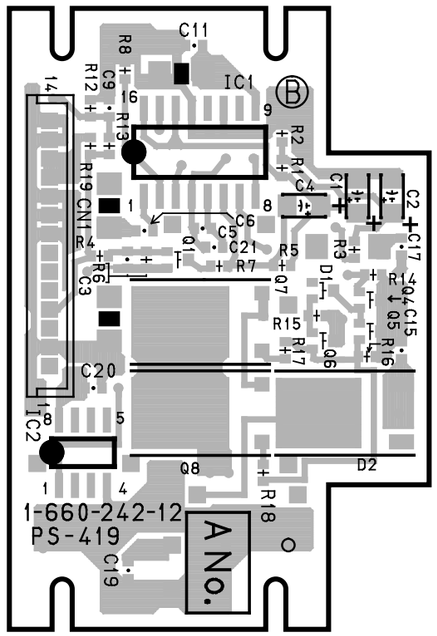

PS-419 -B SIDE-
1-660-242-12

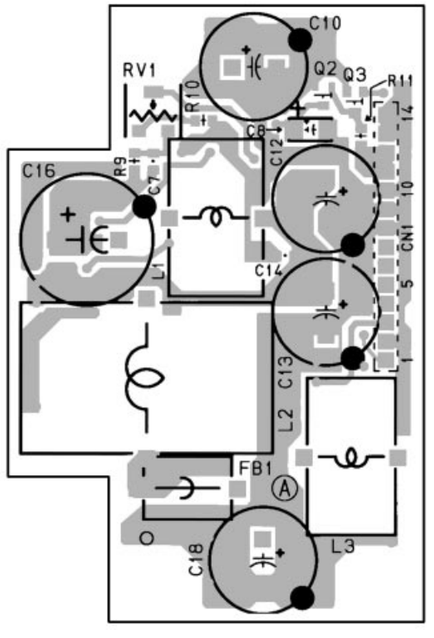

HDC-750 :
S/N 10001 through 10040

PS-419 -A SIDE-
1-660-242-11

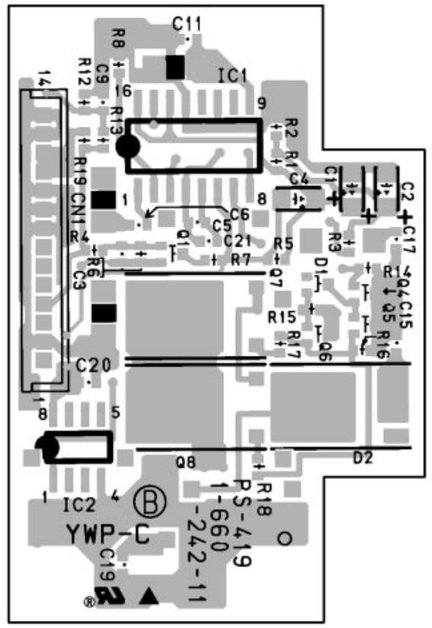

PS-419 -B SIDE-
1-660-242-11

http://getMANUAL.com

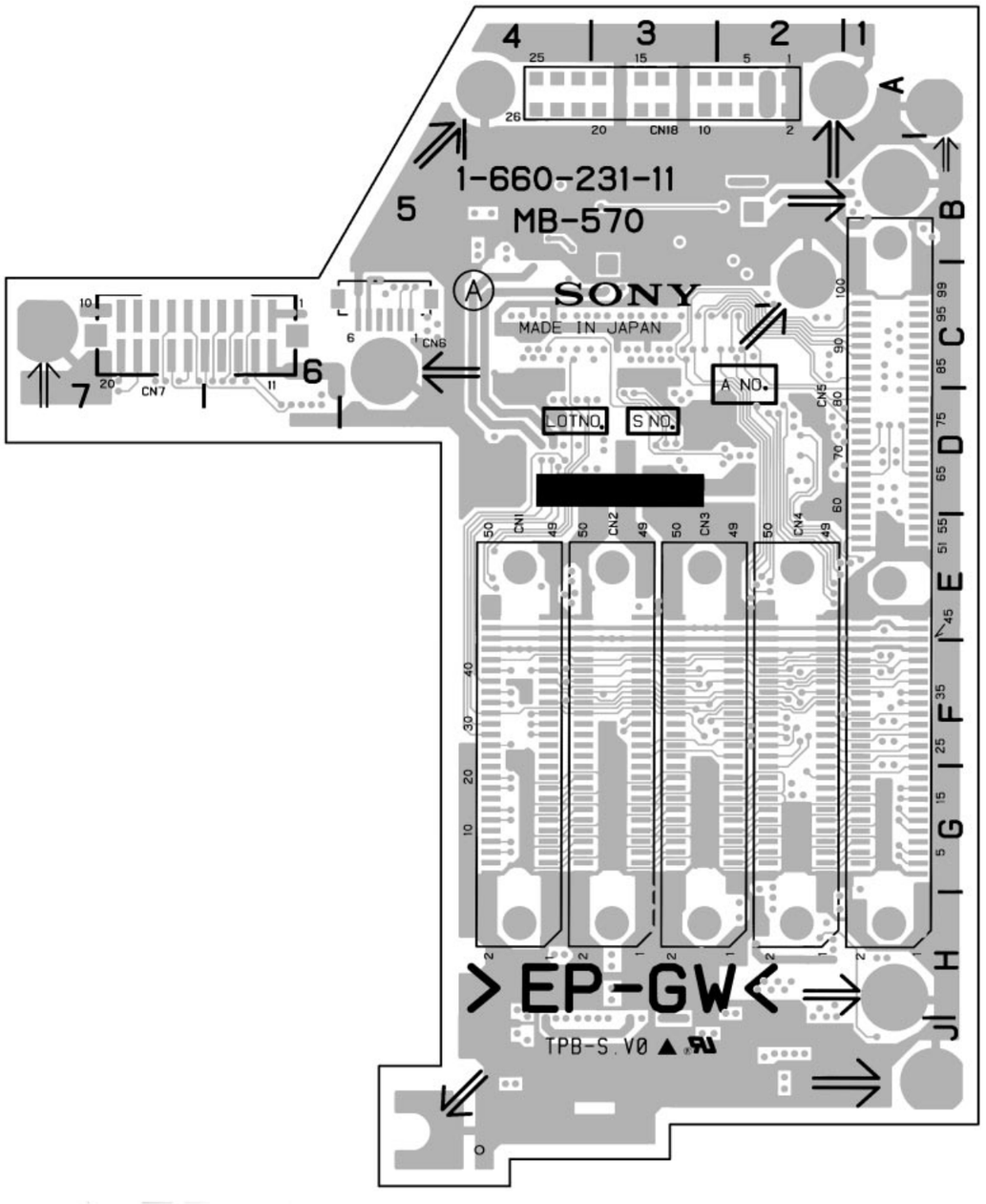

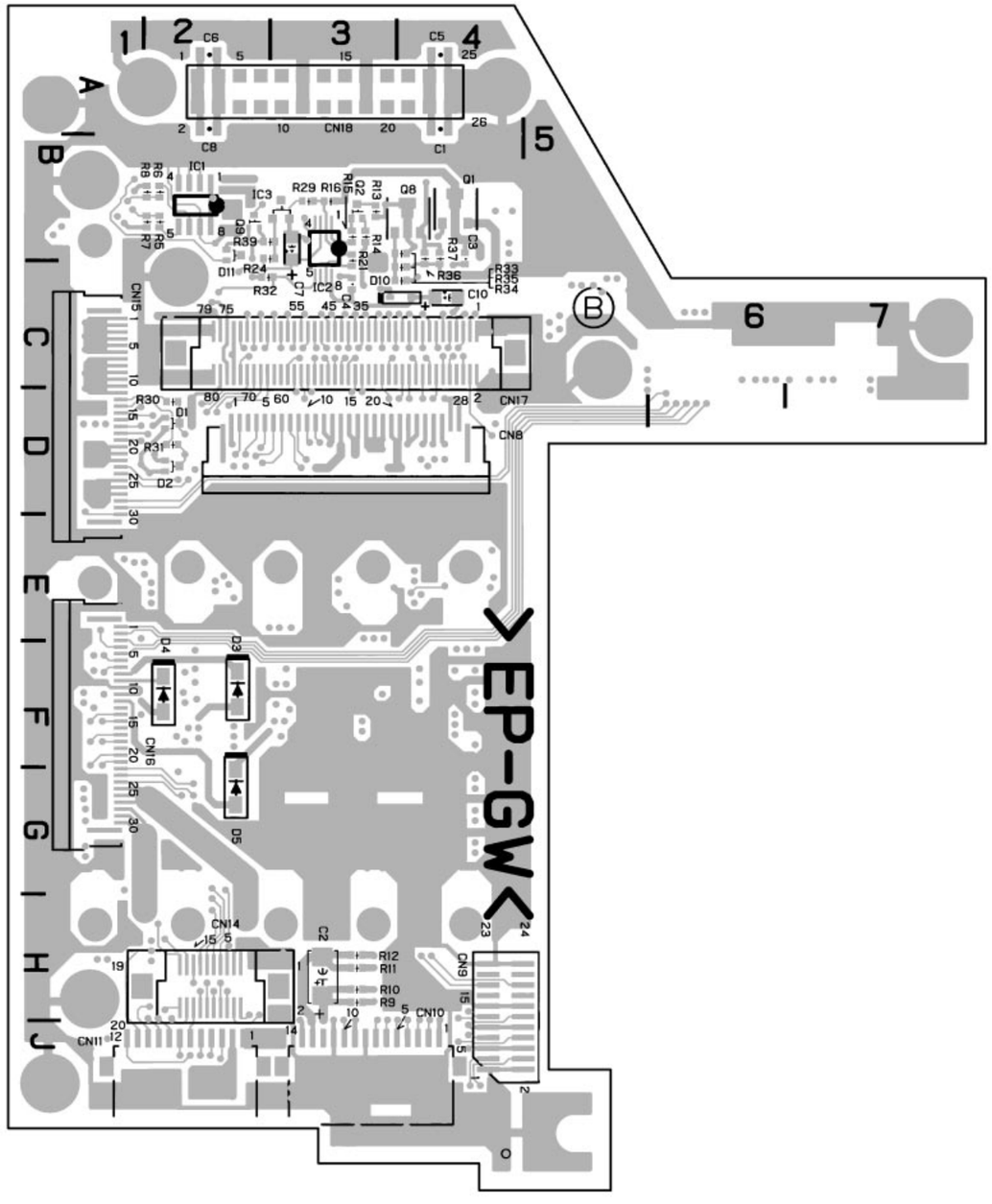

HDC-750

MB-570 -A SIDE-
1-660-231-11

MB-570 -B SIDE-
1-660-231-11

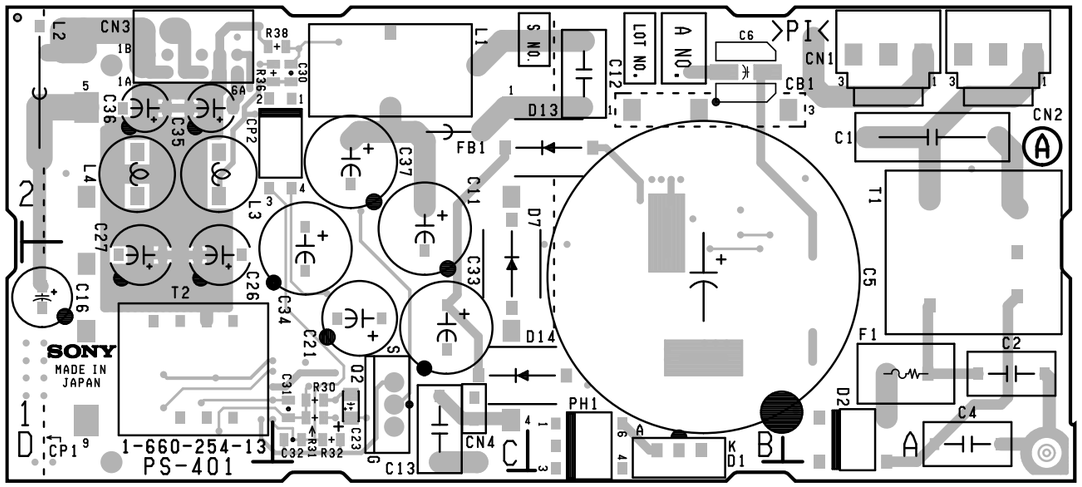

PS-401 -A SIDE-
1-660-254-13

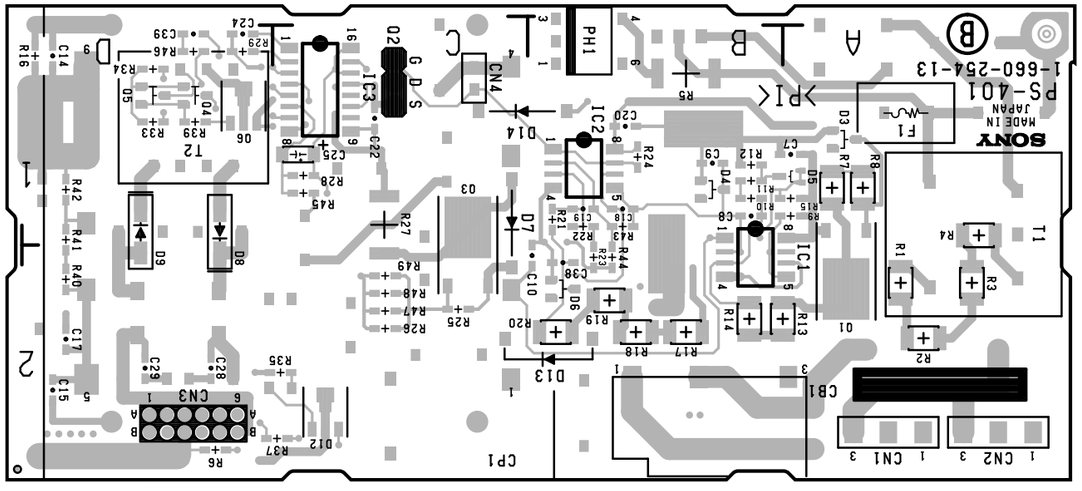

HDCA-750 : S/N 10096 and Higher

PS-401 -B SIDE-
1-660-254-13

PS-401 (1-660-254-13)

CB1	*B2	C6	B2	C20	*B1	C34	C1	D8	*D1	L1	C2	R1	*A2	R15	*A1	R29	*D1	R43	*B1
		C7	*A1	C21	C1	C35	D2	D9	*D1	L2	D2	R2	*A2	R16	*D1	R30	C1	R44	*B2
CN1	A2	C8	*B1	C22	*C1	C36	D2	D12	*C2	L3	D2	R3	*A2	R17	*B2	R31	C1	R45	*C1
CN2	A2	C9	*B1	C23	C1	C37	C2	D13	B2	L4	D2	R4	*A1	R18	*B2	R32	C1	R46	*D1
CN3	D2	C10	*B2	C24	*D1	C38	*B2	D14	C1			R5	*B1	R19	*B2	R33	*D1	R47	*C2
CN4	C1	C11	C2	C25	*C1	C39	*D1			PH1	B1	R6	*D2	R20	*B2	R34	*D1	R48	*C2
		C12	B2	C26	D1			FB1	C2			R7	*A1	R21	*B1	R35	*C2	R49	*C2
CP1	*C1	C13	C1	C27	D1	D1	B1			Q1	*A2	R8	*A1	R22	*B1	R36	C2		
CP2	C2	C14	*D1	C28	*D2	D2	A1	F1	A1	Q2	C1	R9	*A1	R23	*B2	R37	*C2	T1	A1
		C15	*D2	C29	*D2	D3	*A1			Q3	*C1	R10	*B1	R24	*B1	R38	C2	T2	D1
C1	A2	C16	D1	C30	C2	D4	*B1	IC1	*B1	Q4	*D1	R11	*B1	R25	*C2	R39	*D1		
C2	A1	C17	*D2	C31	C1	D5	*A1	IC2	*B1	Q5	*D1	R12	*B1	R26	*C2	R40	*D2	*:B SIDE	
C4	A1	C18	*B1	C32	C1	D6	*B2	IC3	*C1	Q6	*D1	R13	*A2	R27	*C1	R41	*D1		
C5	B1	C19	*B1	C33	C1	D7	C1					R14	*B2	R28	*C1	R42	*D1		

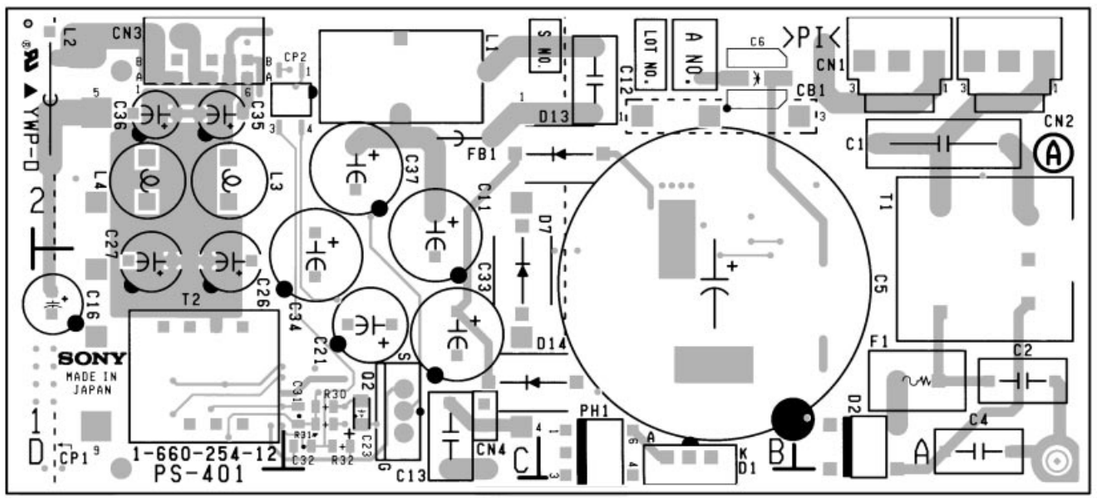

PS-401 -A SIDE-
1-660-254-12

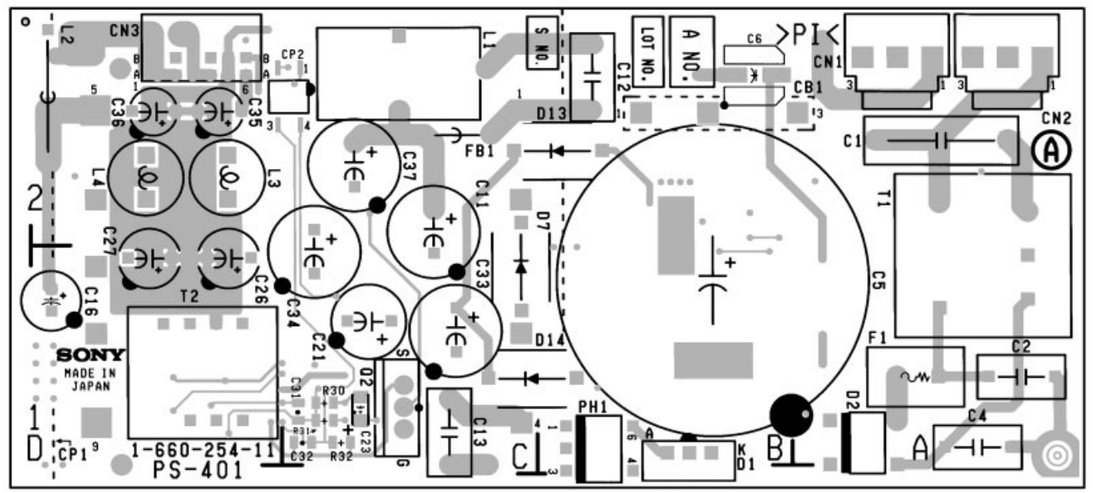

PS-401 -A SIDE-
1-660-254-11

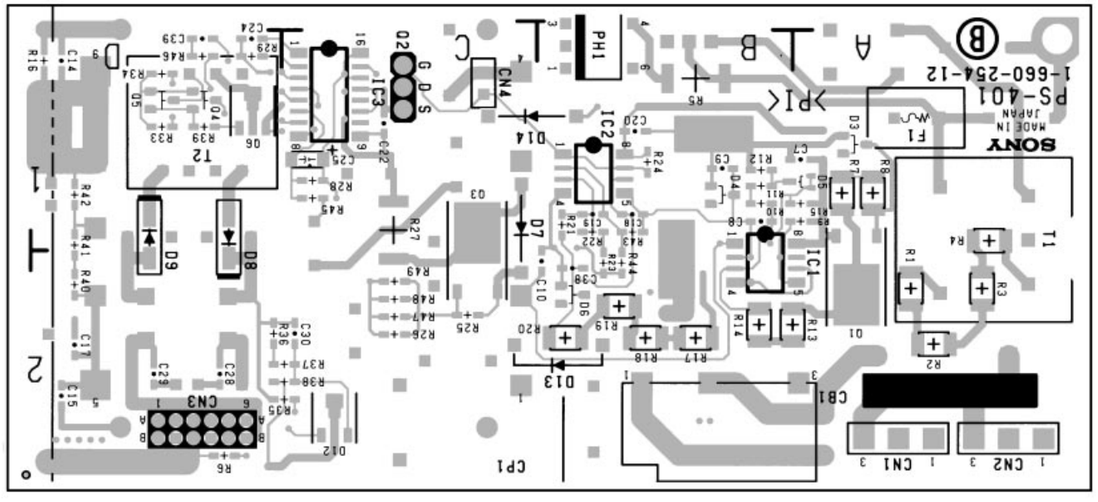

HDCA-750 : S/N 10041 through 10095

PS-401 -B SIDE-
1-660-254-12

PS-401 (1-660-254-12)

CB1	B2	C6	B2	C20	*B1	C34	C1	D9	*D1	L2	D2	R2	*A2	R17	*B2	R31	C1	R45	*C1
		C7	*A1	C21	C1	C35	D2	D12	*C2	L3	D2	R3	*A2	R18	*B2	R32	C1	R47	*C2
CN1	A2	C8	*B1	C22	*C1	C36	D2	D13	B2	L4	D2	R4	*A1	R19	*B2	R33	*D1	R48	*C2
CN2	A2	C9	*B1	C23	C1	C37	C2	D14	C1			R5	*B1	R20	*B2	R34	*D1	R49	*C2
CN3	D2	C10	*B2	C24	*D1	C38	*B2			PH1	B1	R6	*D2	R21	*B1	R35	*C2		
CN4	C1	C11	C2	C25	*C1			FB1	C2			R7	*A1	R22	*B1	R36	*D2	T1	A1
		C12	B2	C26	D1	D1	B1			Q1	*A2	R8	*A1	R23	*B2	R37	*C2	T2	D1
CP1	*C1	C13	C1	C27	D1	D2	A1	F1	A1	Q2	C1	R9	*A1	R24	*B1	R38	*C2		
CP2	C2	C14	*D1	C28	*D2	D3	*A1			Q3	*C1	R10	*B1	R25	*C2	R39	*D1	*:B SIDE	
		C15	*D2	C29	*D2	D4	*B1	IC1	*B1	Q4	*D1	R11	*B1	R26	*C2	R40	*D2		
C1	A2	C16	D1	C30	*C2	D5	*A1	IC2	*B1	Q5	*D1	R12	*B1	R27	*C1	R41	*D1		
C2	A1	C17	*D2	C31	C1	D6	*B2	IC3	*C1	Q6	*D1	R13	*A2	R28	*C1	R42	*D1		
C4	A1	C18	*B1	C32	C1	D7	C1					R14	*B2	R29	*D1	R43	*B1		
C5	B1	C19	*B1	C33	C1	D8	*D1	L1	C2	R1	*A2	R16	*D1	R30	C1	R44	*B2		

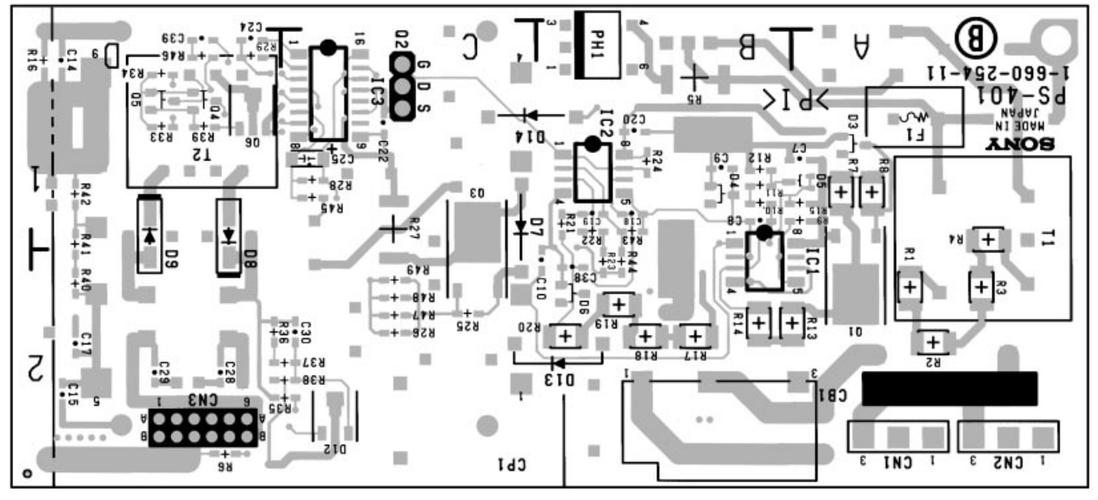

HDCA-750 : S/N 10001 through 10040

PS-401 -B SIDE-
1-660-254-11

PS-401 (1-660-254-11)

CB1	B2	C7	*A1	C21	C1	C35	D2	D12	*C2	L3	D2	R3	*A2	R18	*B2	R32	C1	R47	*C2
		C8	*B1	C22	*C1	C36	D2	D13	B2	L4	D2	R4	*A1	R19	*B2	R33	*D1	R48	*C2
CN1	A2	C9	*B1	C23	C1	C37	C2	D14	C1			R5	*B1	R20	*B2	R34	*D1	R49	*C2
CN2	A2	C10	*B2	C24	*D1	C38	*B2			PH1	B1	R6	*D2	R21	*B1	R35	*C2		
CN3	D2	C11	C2	C25	*C1			FB1	C2			R7	*A1	R22	*B1	R36	*D2	T1	A1
		C12	B2	C26	D1	D1	B1			Q1	*A2	R8	*A1	R23	*B2	R37	*C2	T2	D1
CP1	*C2	C13	C1	C27	D1	D2	A1	F1	A1	Q2	C1	R9	*A1	R24	*B1	R38	*C2		
CP2	C2	C14	*D1	C28	*D2	D3	*A1			Q3	*C1	R10	*B1	R25	*C2	R39	*D1	*:B SIDE	
		C15	*D2	C29	*D2	D4	*B1	IC1	*B1	Q4	*D1	R11	*B1	R26	*C2	R40	*D2		
C1	A2	C16	D1	C30	*C2	D5	*A1	IC2	*B1	Q5	*D1	R12	*B1	R27	*C1	R41	*D1		
C2	A1	C17	*D2	C31	C1	D6	*B2	IC3	*C1	Q6	*D1	R13	*A2	R28	*C1	R42	*D1		
C4	A1	C18	*B1	C32	C1	D7	C1					R14	*B2	R29	*D1	R43	*B1		
C5	B1	C19	*B1	C33	C1	D8	*D1	L1	C2	R1	*A2	R16	*D1	R30	C1	R44	*B2		
C6	B2	C20	*B1	C34	C1	D9	*D1	L2	D2	R2	*A2	R17	*B2	R31	C1	R45	*C1		

MB-573 (1-660-253-12,13)

C1	H4	R31	F2
C2	H4	R32	F2
C3	H4	R33	F2
C4	H1	R34	H2
C6	H4	R35	H2
C7	G1	R36	H2
C8	H1	R37	H2
		R38	H2
CN1	D7	R39	H1
CN2	D6	R40	G2
CN3	D5	R41	G2
CN4	D4	R42	G2
CN5	E3	R43	G2
CN6	*F4	R44	G2
CN7	*C7	R45	G1
CN8	*E7	R46	H1
CN9	*F6	R47	G1
CN10	*J6	R48	G6
CN11	J5	R49	G6
CN12	J6	R50	G6
CN13	J7	R51	G6
CN14	*G1		
CN15	J5	*:B: SIDE	
CN16	J5		
CN17	*C6		
CN18	G1		
CN19	*E3		
CN20	*D3		
CN21	*E1		
CN22	*F1		
CN23	*D1		
CN24	*E6		
CN25	*F5		
CN26	*B6		
CN27	C2		
CN28	E1		
CN29	*C2		
CN30	*B2		
CN31	*C5		
CN32	B2		
D1	*C7		
D2	*C7		
D3	*B2		
D6	H1		
D7	H1		
D9	H1		
IC1	*B2		
IC2	H2		
IC3	G1		
Q1	H2		
Q2	H2		
Q3	H1		
Q4	G2		
Q5	G2		
Q6	G2		
Q7	G2		
Q8	H2		
Q9	G2		
Q10	H1		
Q11	G1		
Q12	G6		
Q13	G6		
R1	*C7		
R2	*C7		
R3	*H5		
R4	*H5		
R5	H4		
R6	H4		
R7	H4		
R8	G4		
R9	*B3		
R10	*B2		
R11	*B3		
R12	*B2		
R13	H4		
R14	H4		
R15	H4		
R16	H4		
R17	H2		
R18	H2		
R19	H2		
R20	H2		
R21	H1		
R22	H1		
R23	H1		
R24	G2		
R25	G2		
R26	G2		
R27	G1		
R28	G2		
R29	G1		
R30	G1		

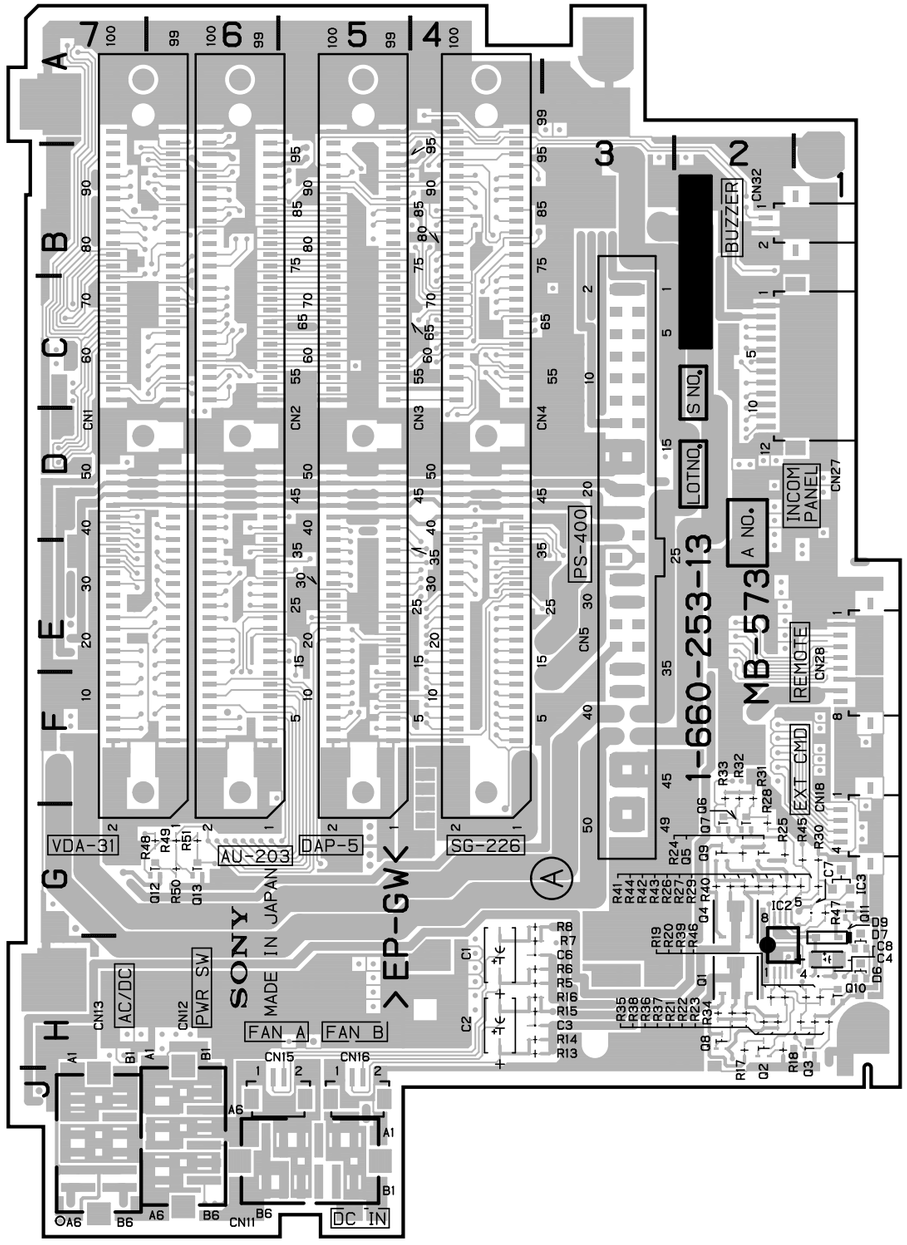

HDCA-750 : S/N 10086 and Higher

MB-573 -A SIDE-
1-660-253-12, 13

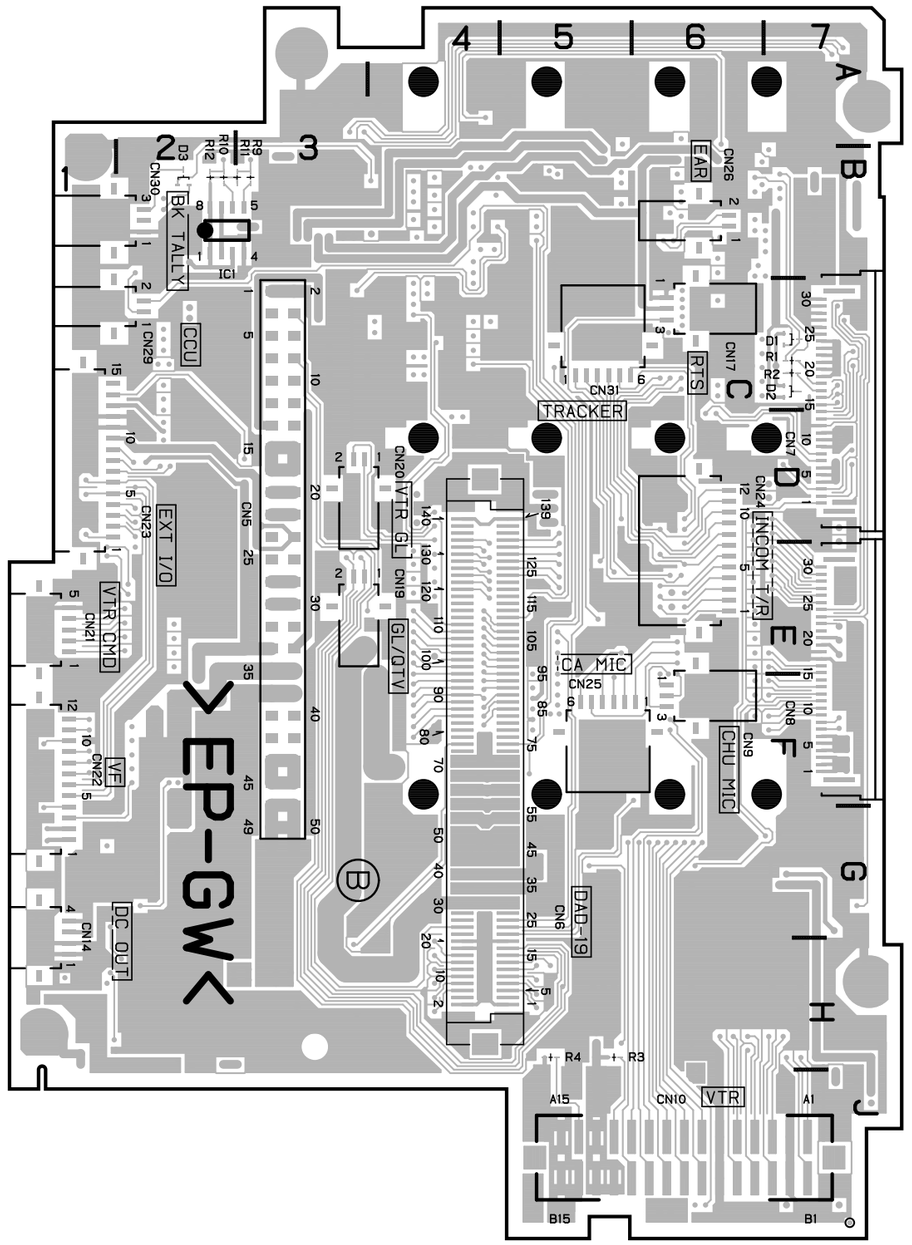

MB-573 -B SIDE-
1-660-253-12, 13

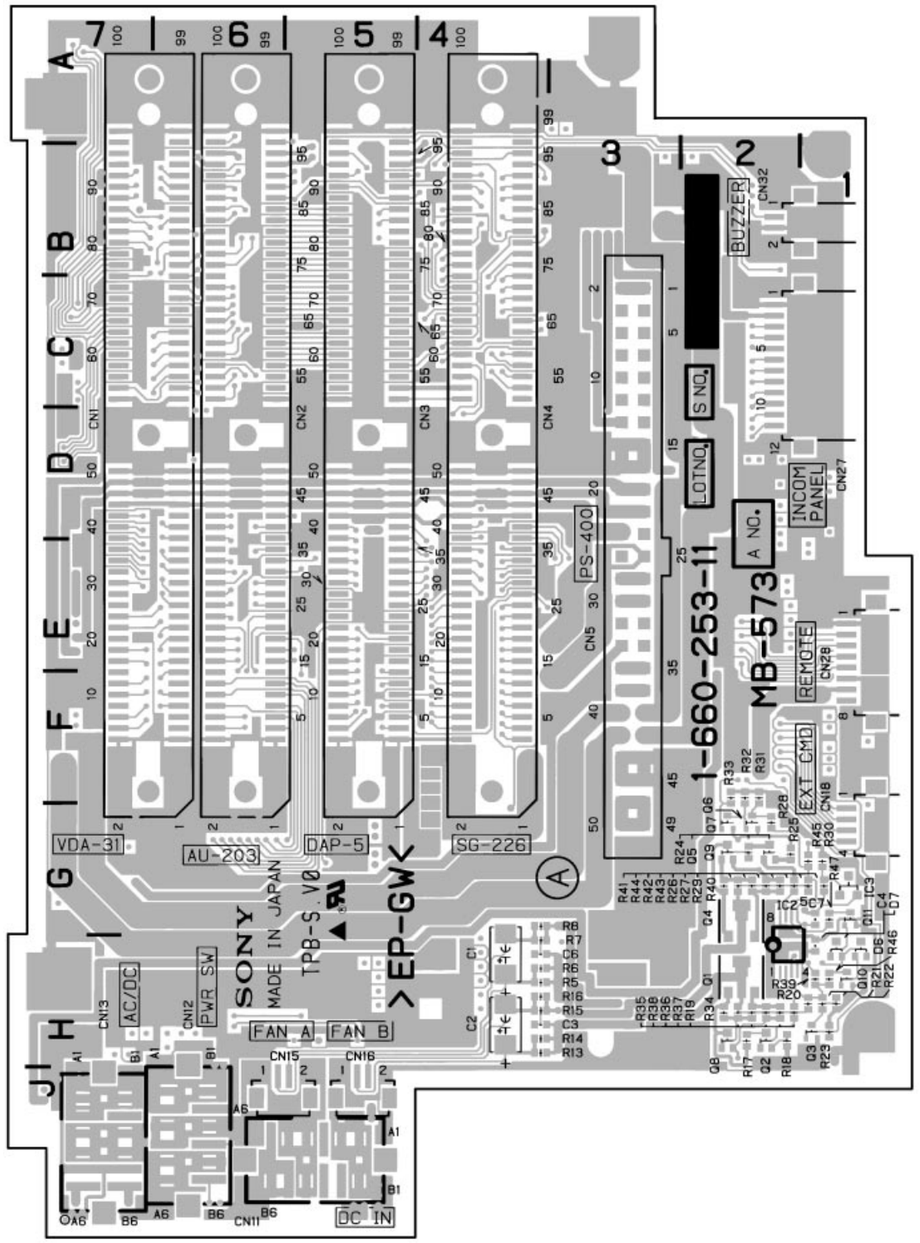

HDCA-750 : S/N 10001 through 10085

MB-573 -A SIDE-
1-660-253-11

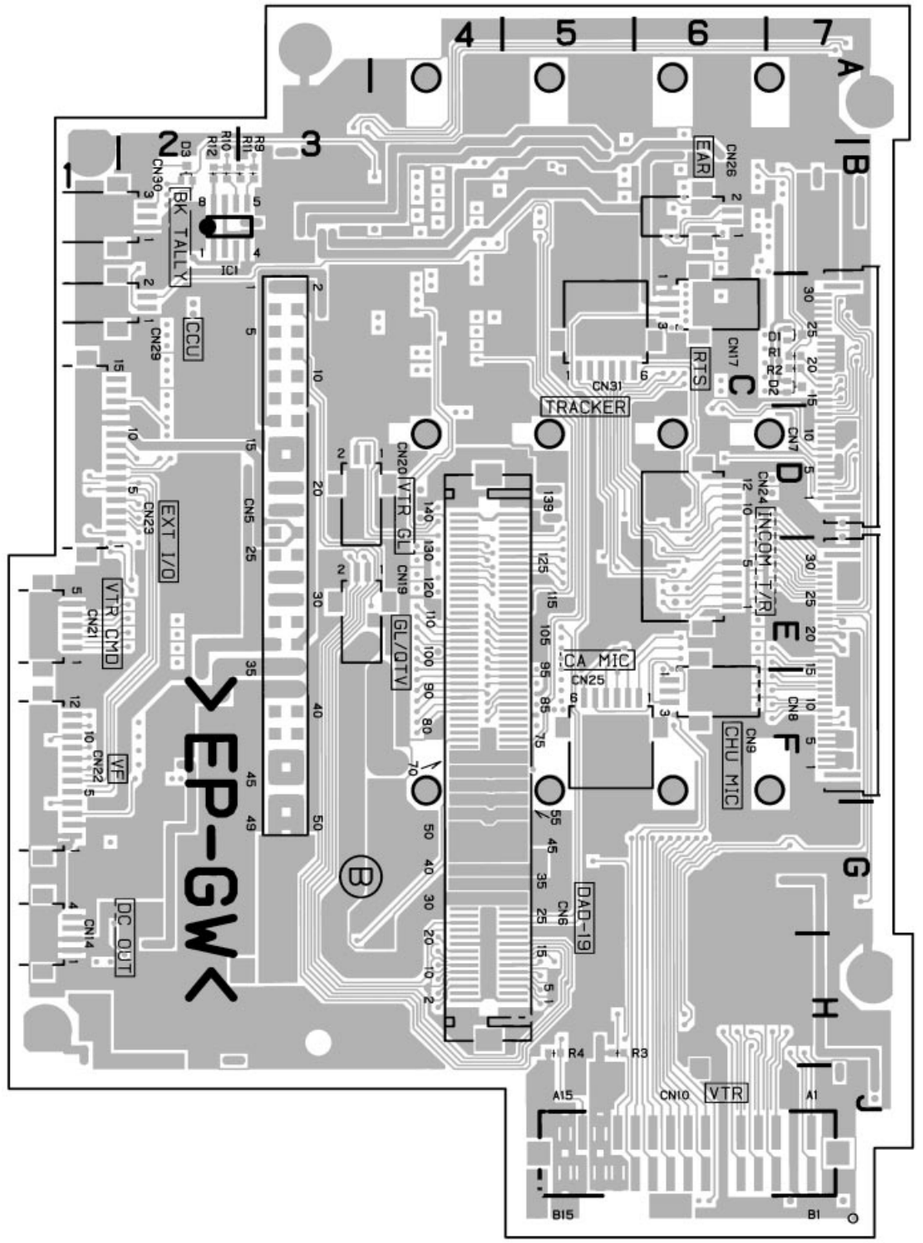

MB-573 -B SIDE-
1-660-253-11

Section 5
Schematic Diagrams

Location of Printed Circuit Boards

HDC-700

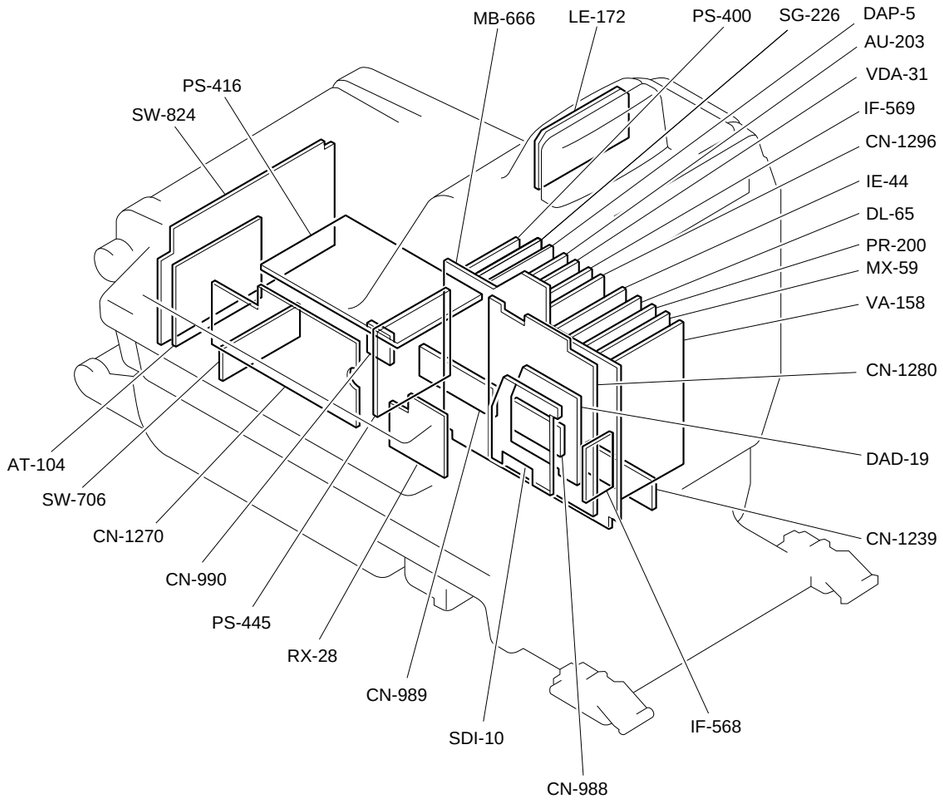

HDC-750

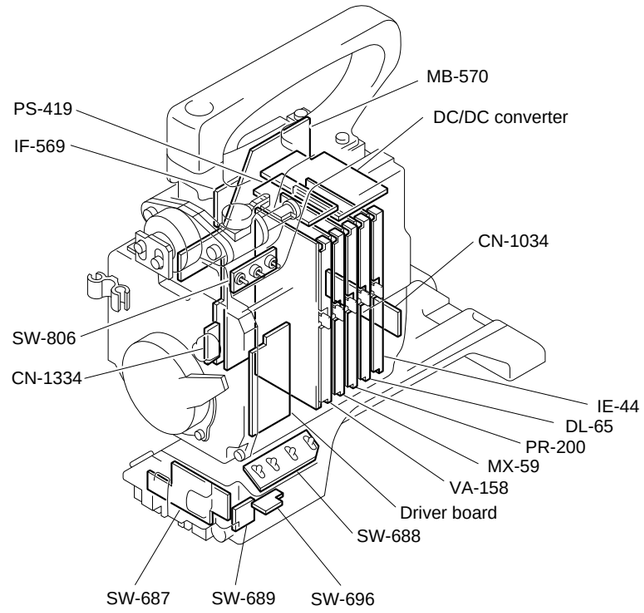

HDCA-750

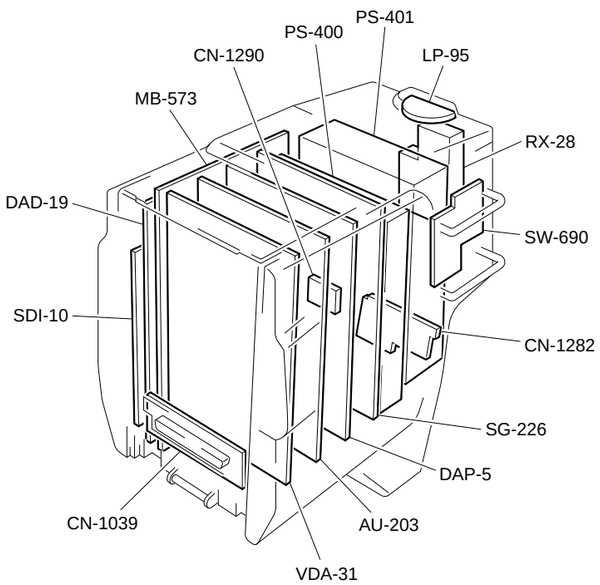

HDC-700 : S/N 10078 and Higher
HDC-750 : S/N 10116 and Higher

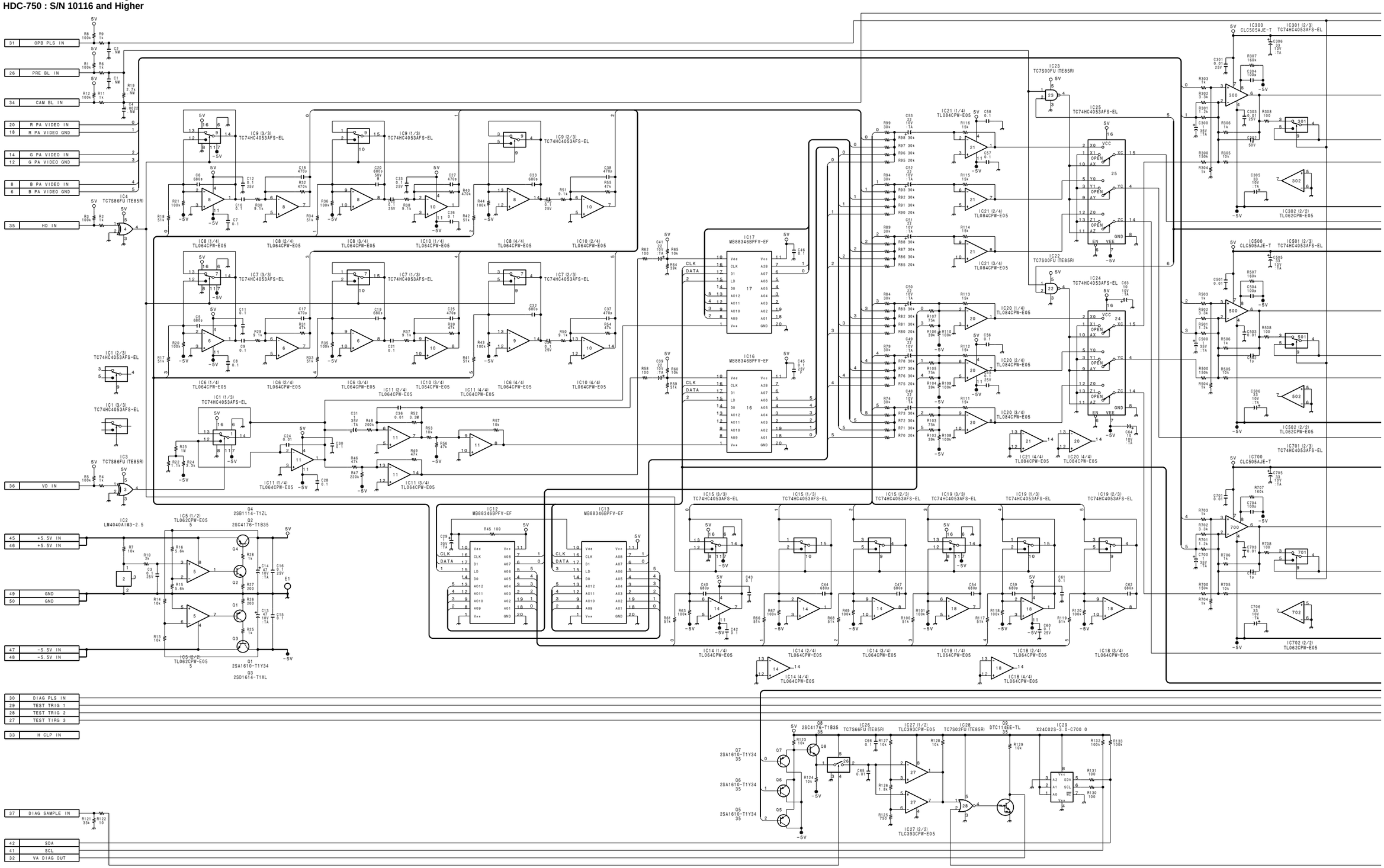

5-2 (a) 5-2 (a)

HDC-700/750
HDCA-750

A B C D E F G H

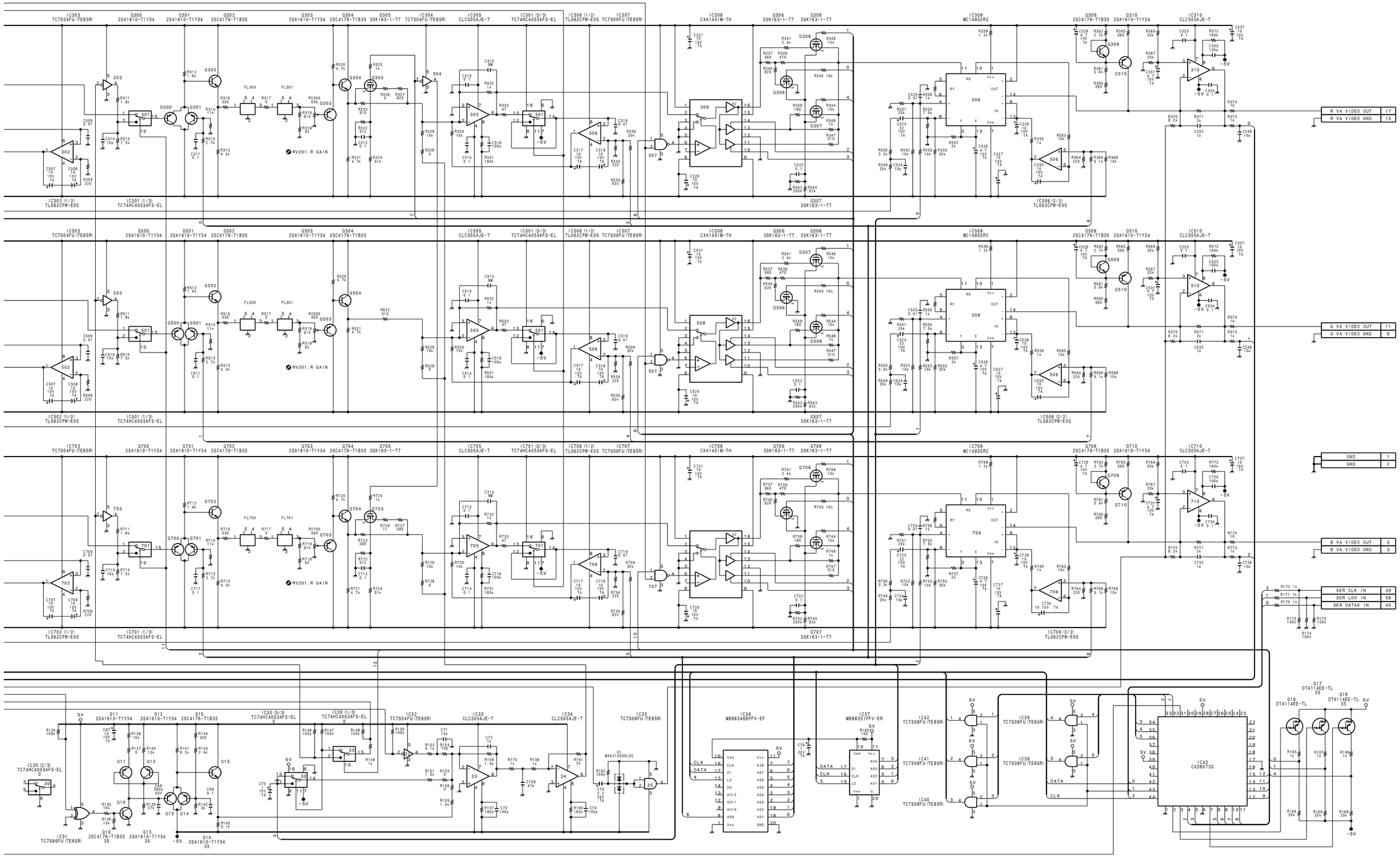

VA-158

BOARD NO. 1-660-228-14
LOT NO. 705-
B-¥HDC750-VA158-14

HDC-700/750
HDCA-750

5-3 (a) 5-3 (a)

I J K L M N O P

HDC-700 : S/N 10001 through 10077
HDC-750 : S/N 10001 through 10115

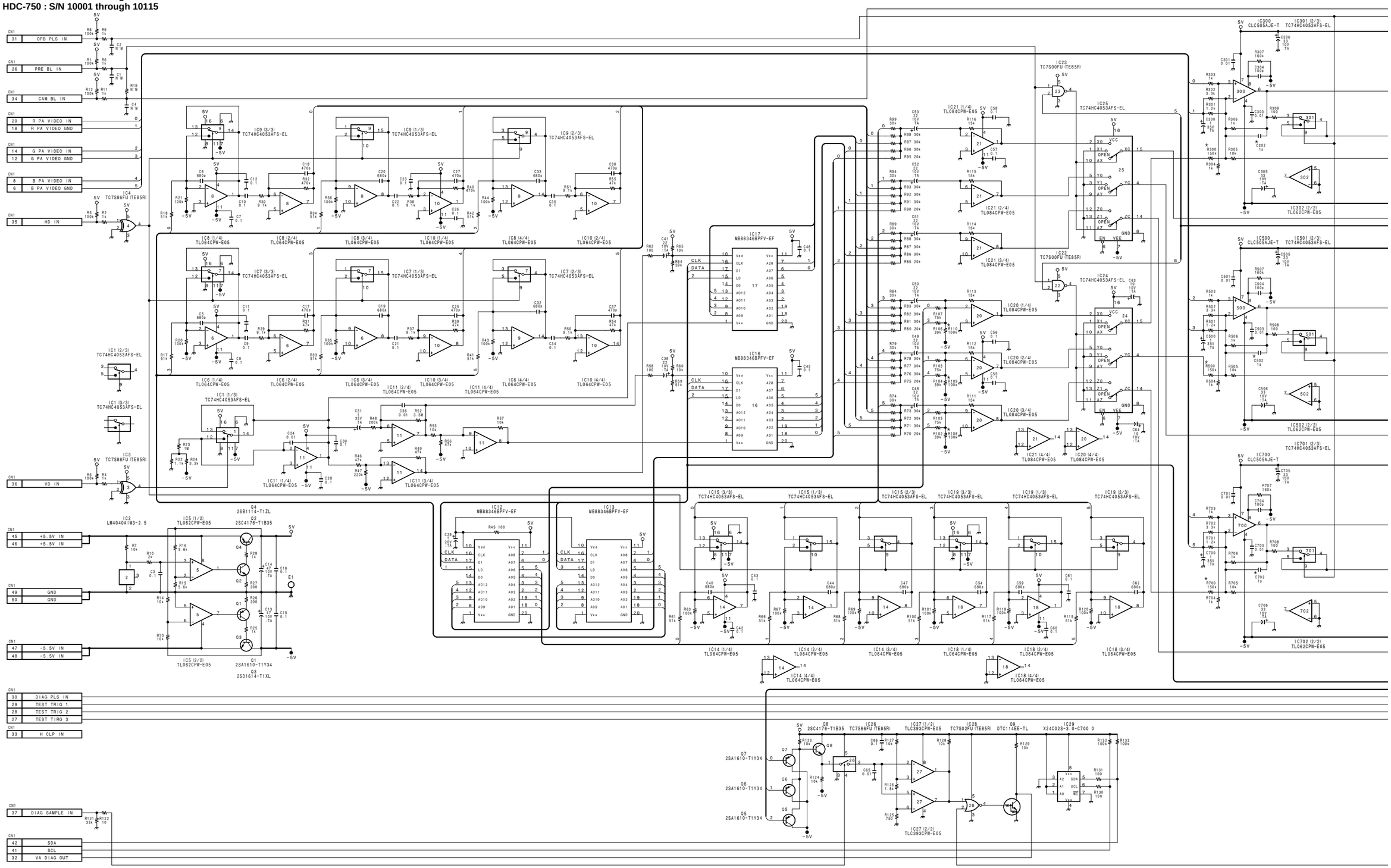

http://getMANUAL.com

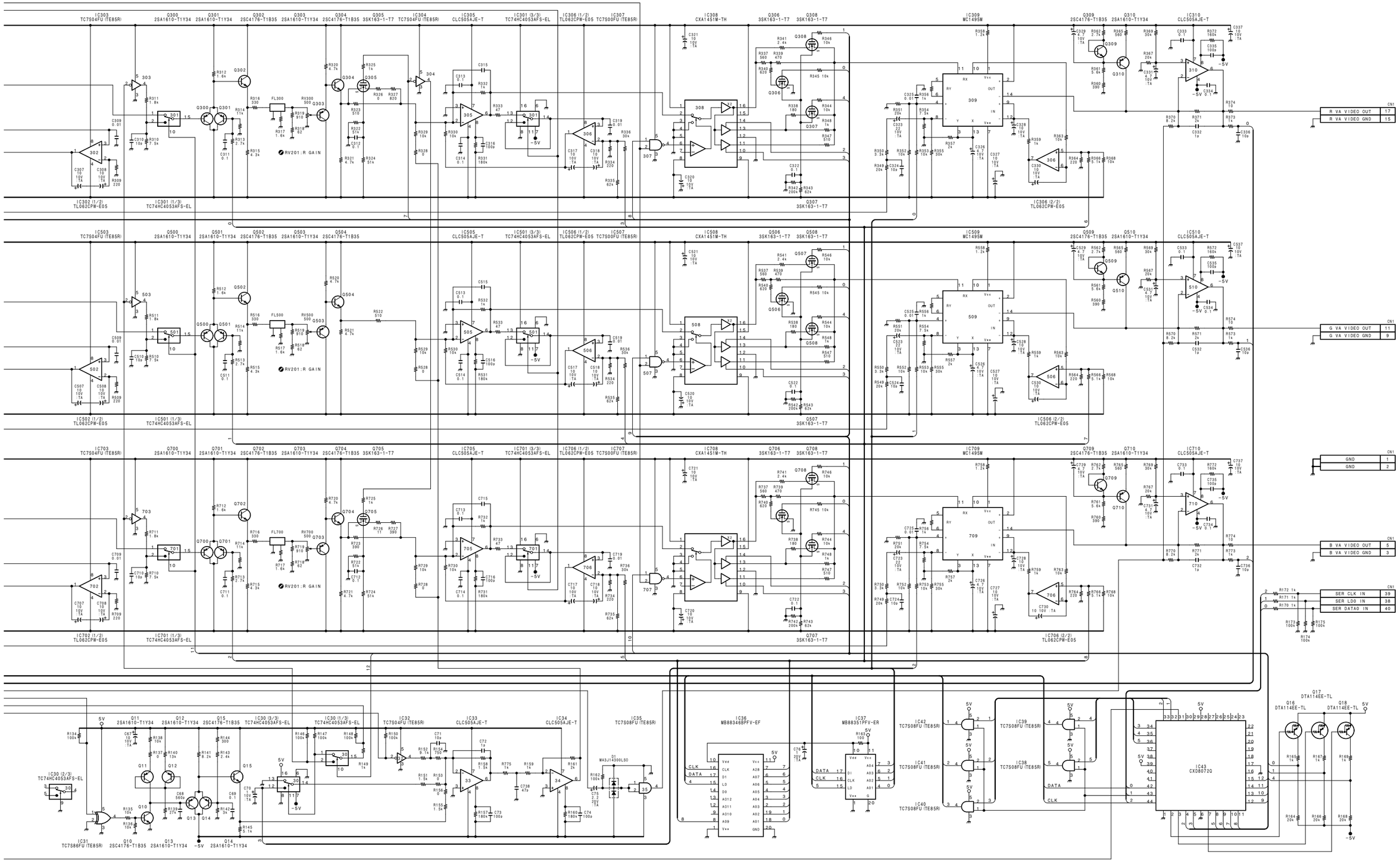

NOTE
*

REF. NO.	CHANGE INFORMATION	SERIAL NO.
C302. 502. 702	3P → 1P	10043- (HDC-700)
R108. 109. 110	51k → 100k	10096- (HDC-750)
R300. 500. 700	36k → 150k	

VA-158

BOARD NO. 1-660-228-11/12
LOT NO. 511-
B-¥HDC750-VA158-12

HDC-700/750
HDCA-750

5-3 5-3

I J K L M N O P

HDC-700
HDC-750

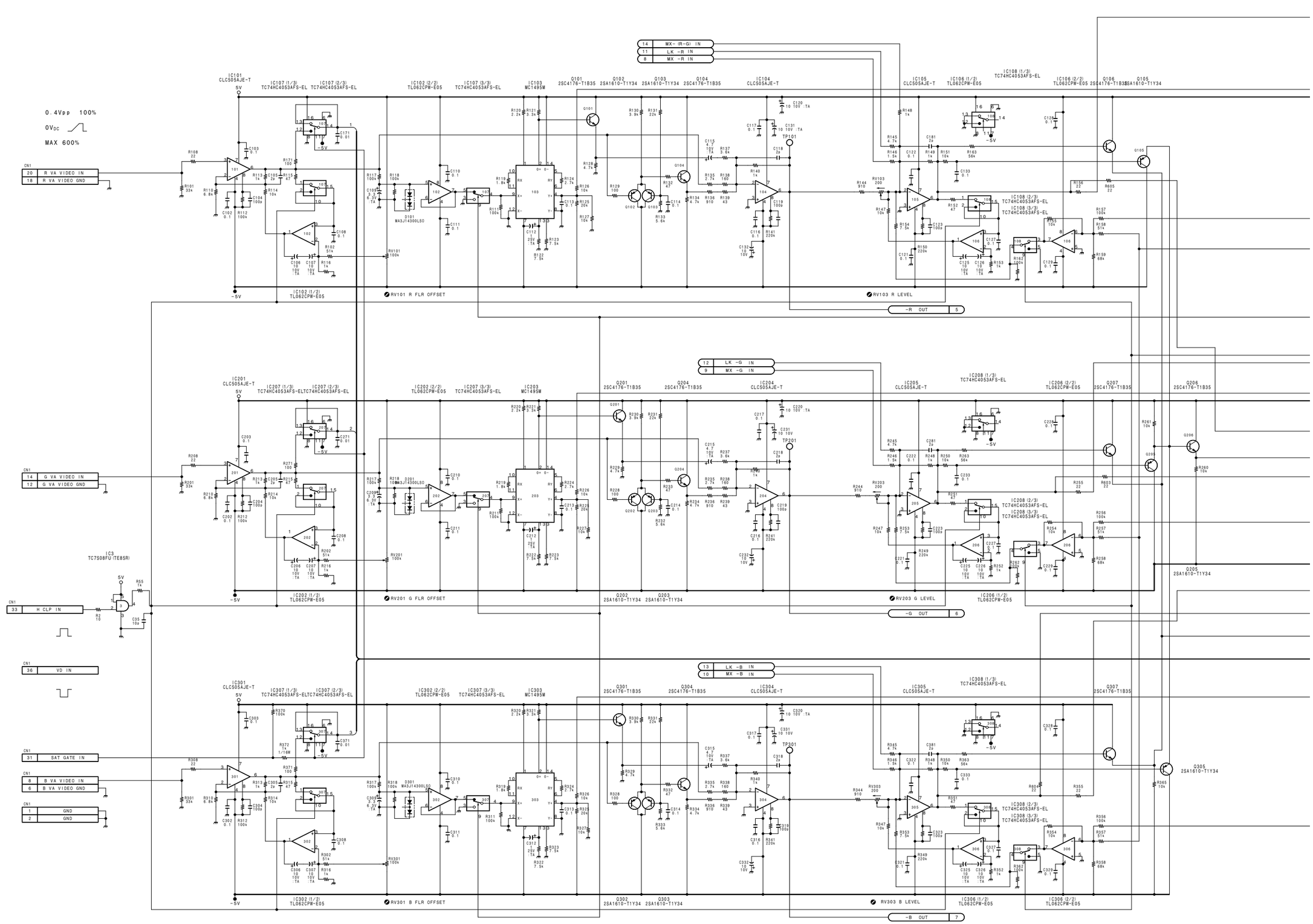

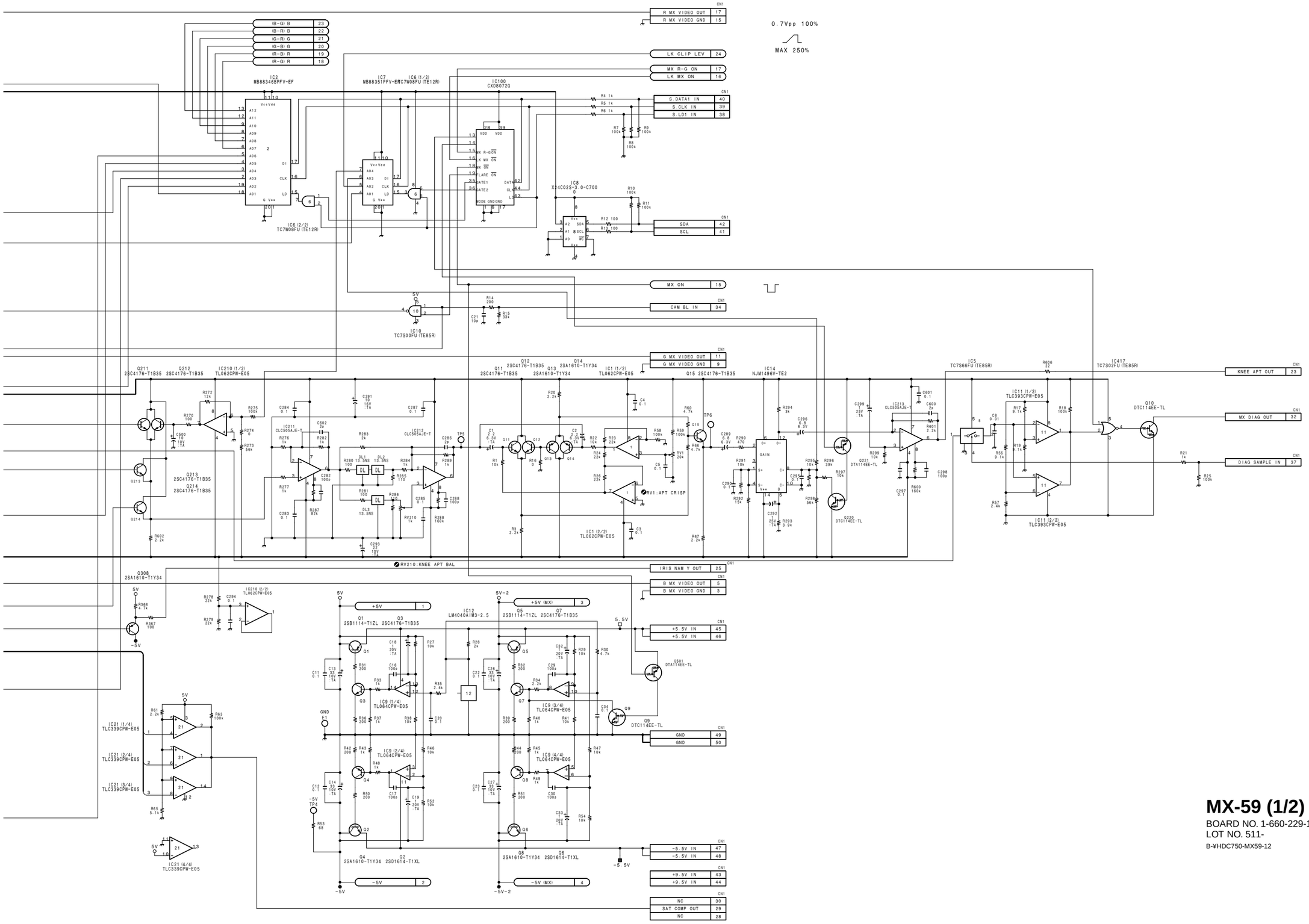

MX-59 (1/2)
BOARD NO. 1-660-229-11/12
LOT NO. 511-
B-¥HDC750-MX59-12

HDC-700
HDC-750

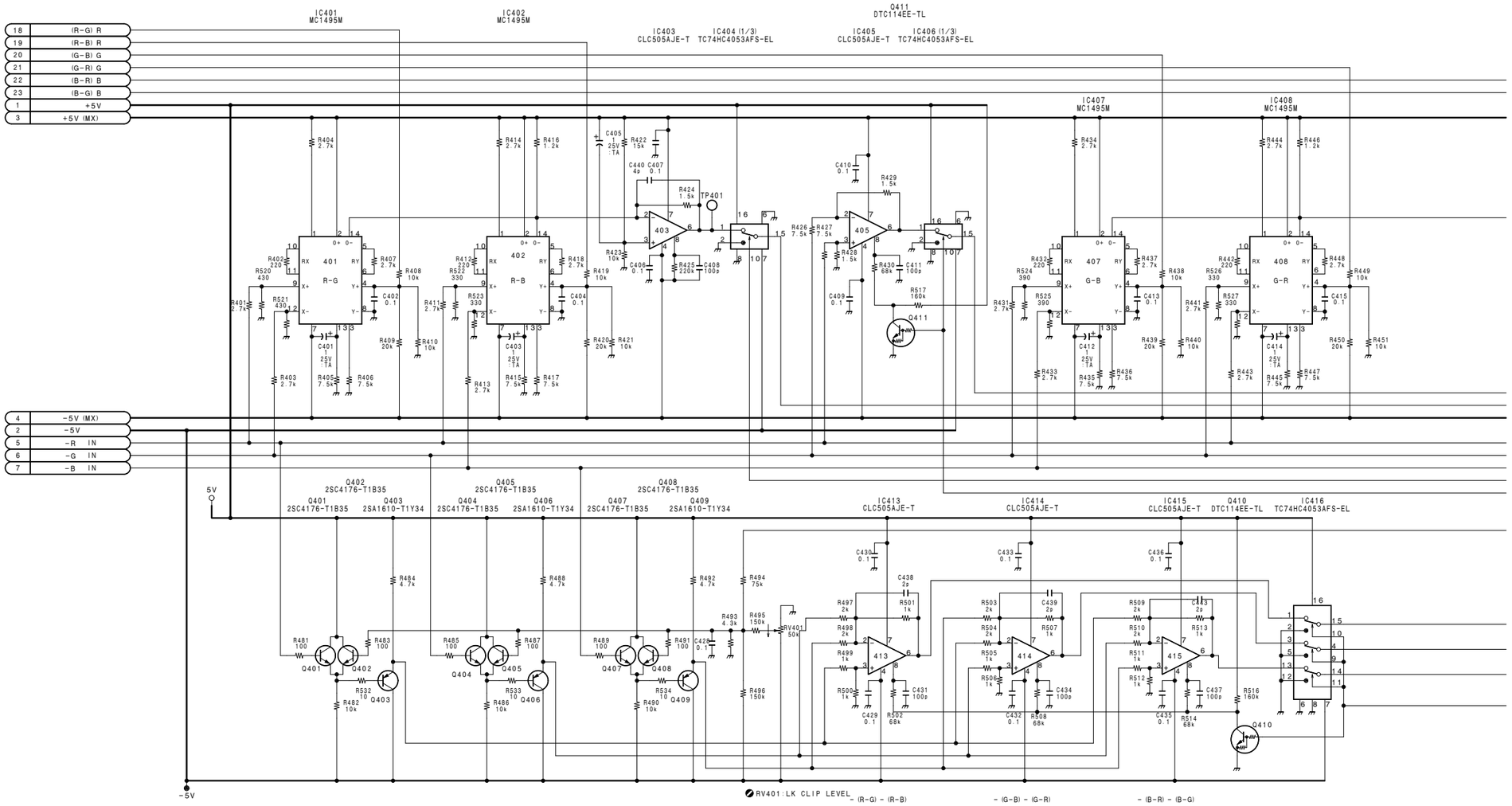

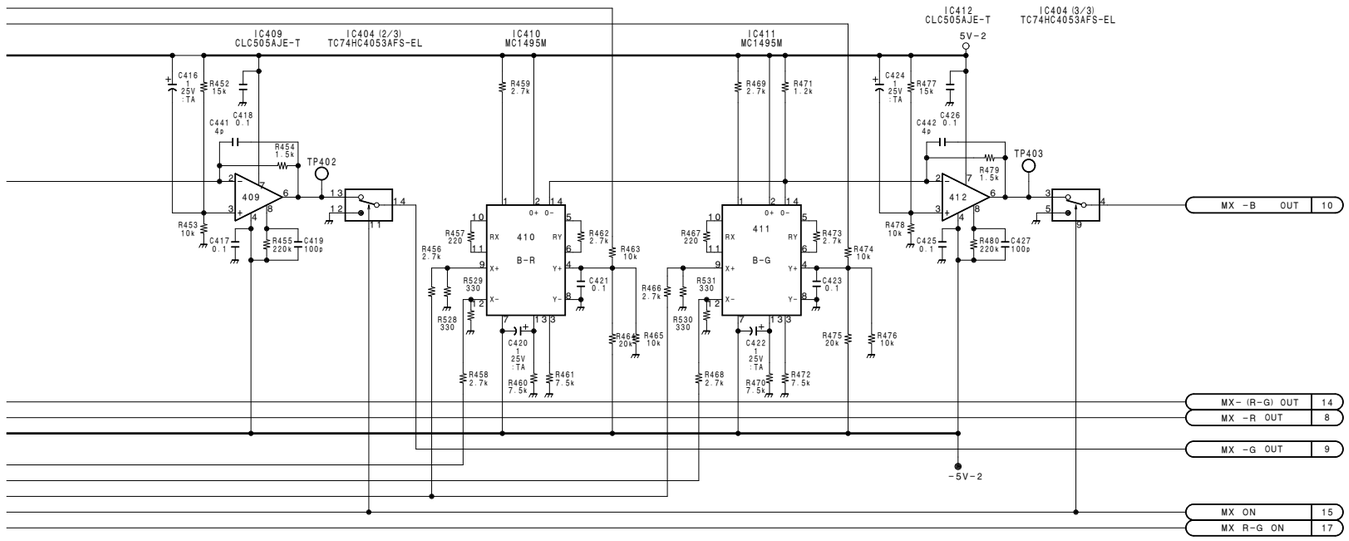

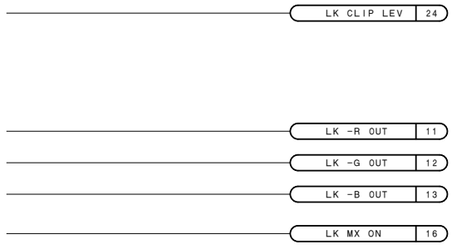

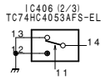

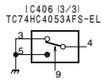

MX-59 (2/2)

BOARD NO. 1-660-229-11/12
LOT NO. 511-
B-¥HDC750-MX59-12

HDC-700
HDC-750

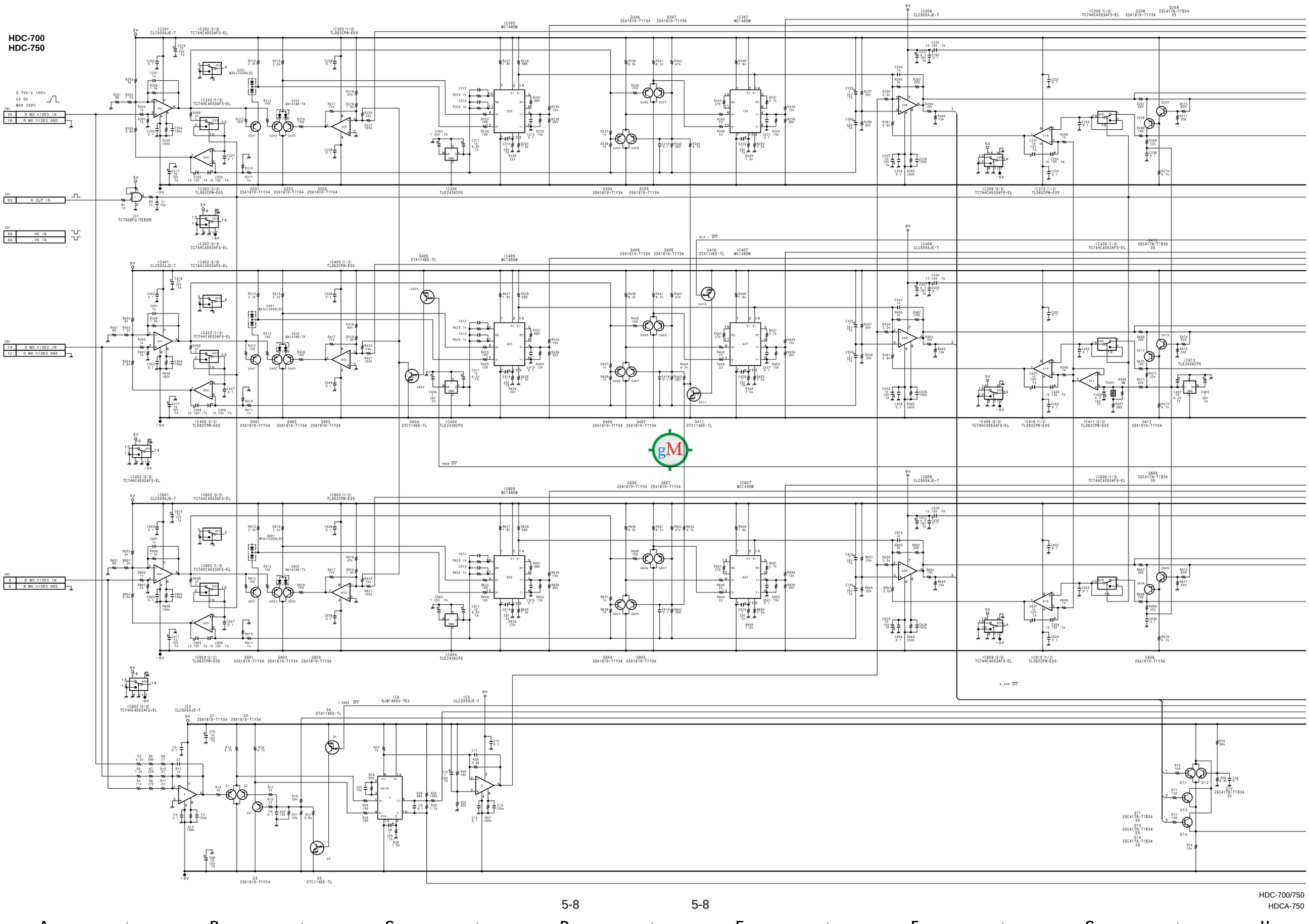

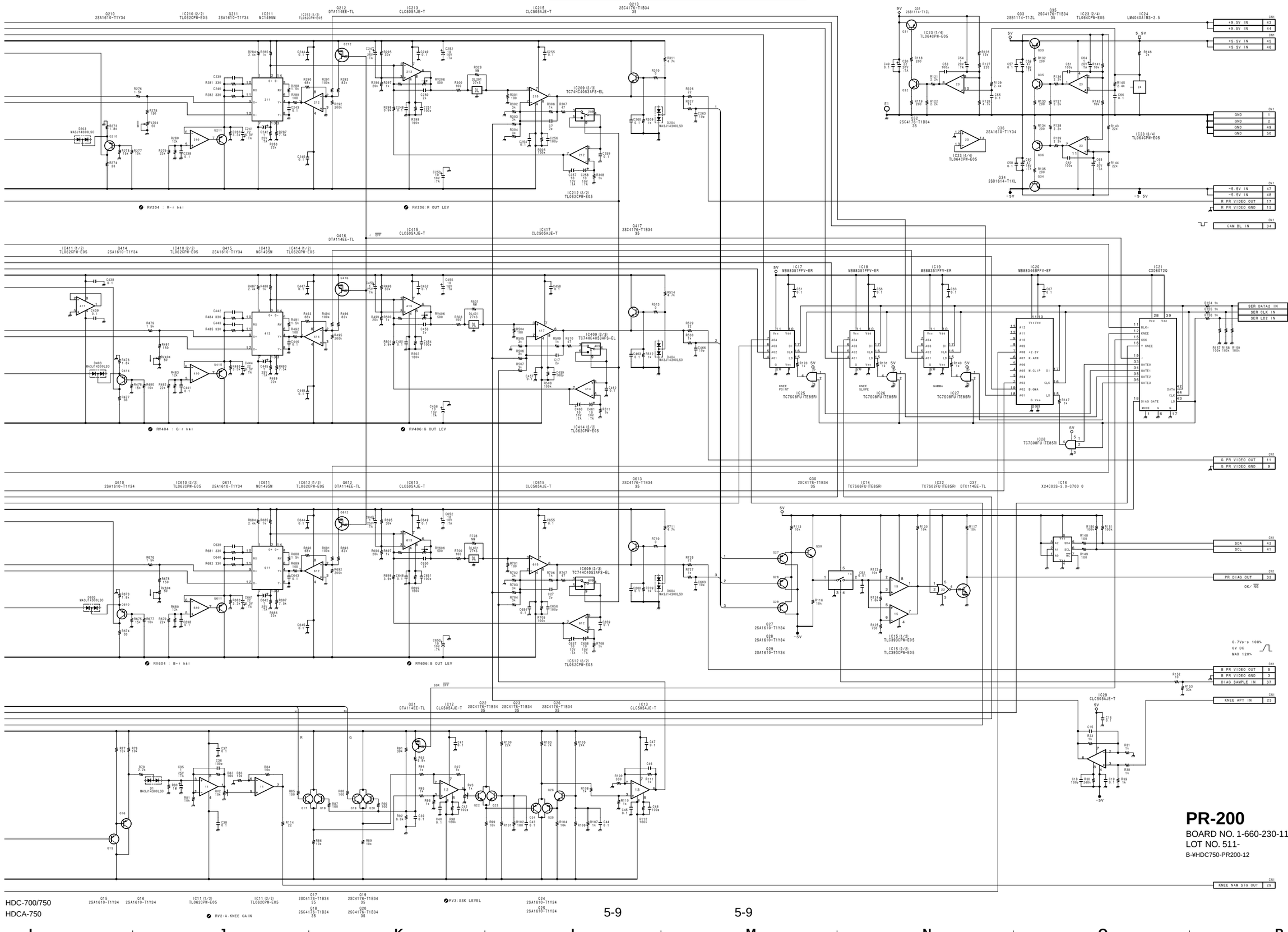

PR-200

BOARD NO. 1-660-230-11/12
LOT NO. 511-
B-¥HDC750-PR200-12

HDC-700 : S/N 10078 and Higher
HDC-750 : S/N 10111 and Higher

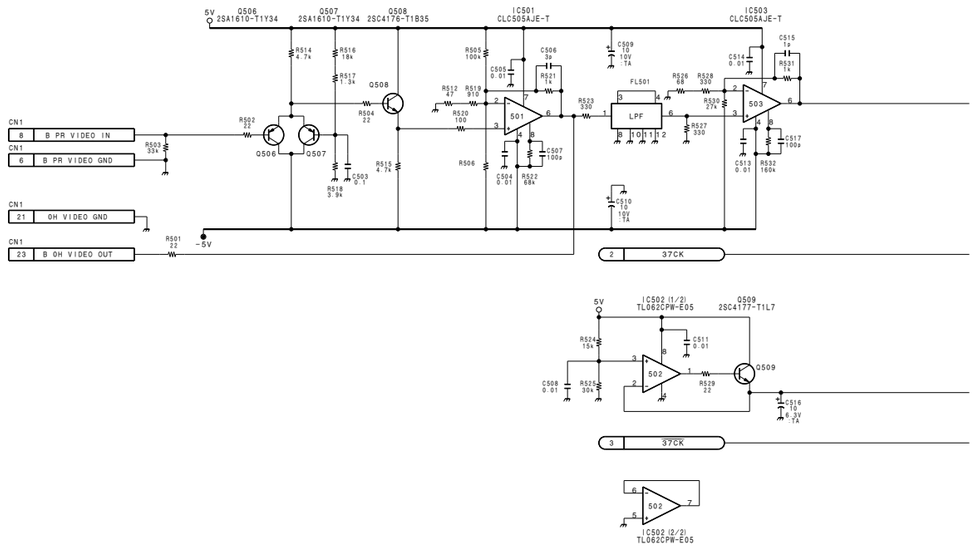

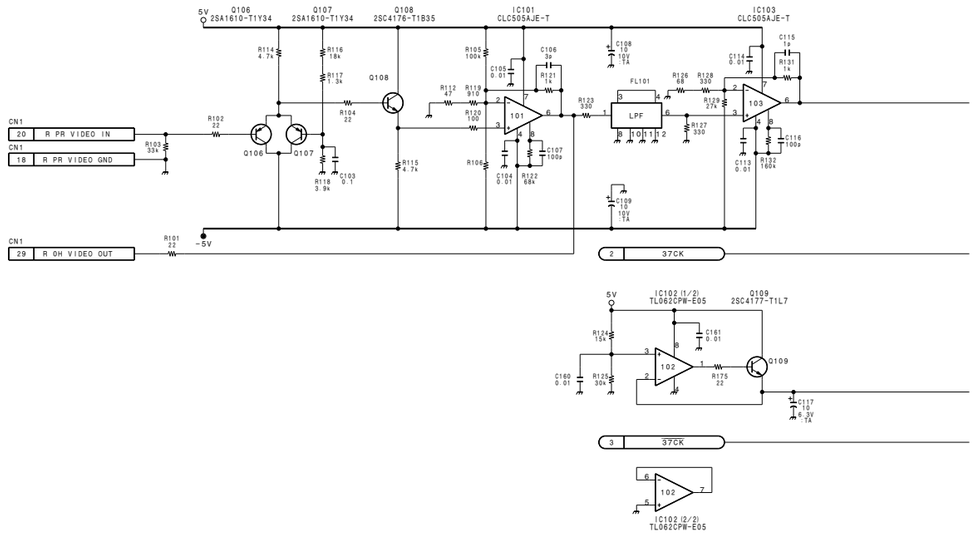

5-10 (a) 5-10 (a)

HDC-700/750
HDCA-750

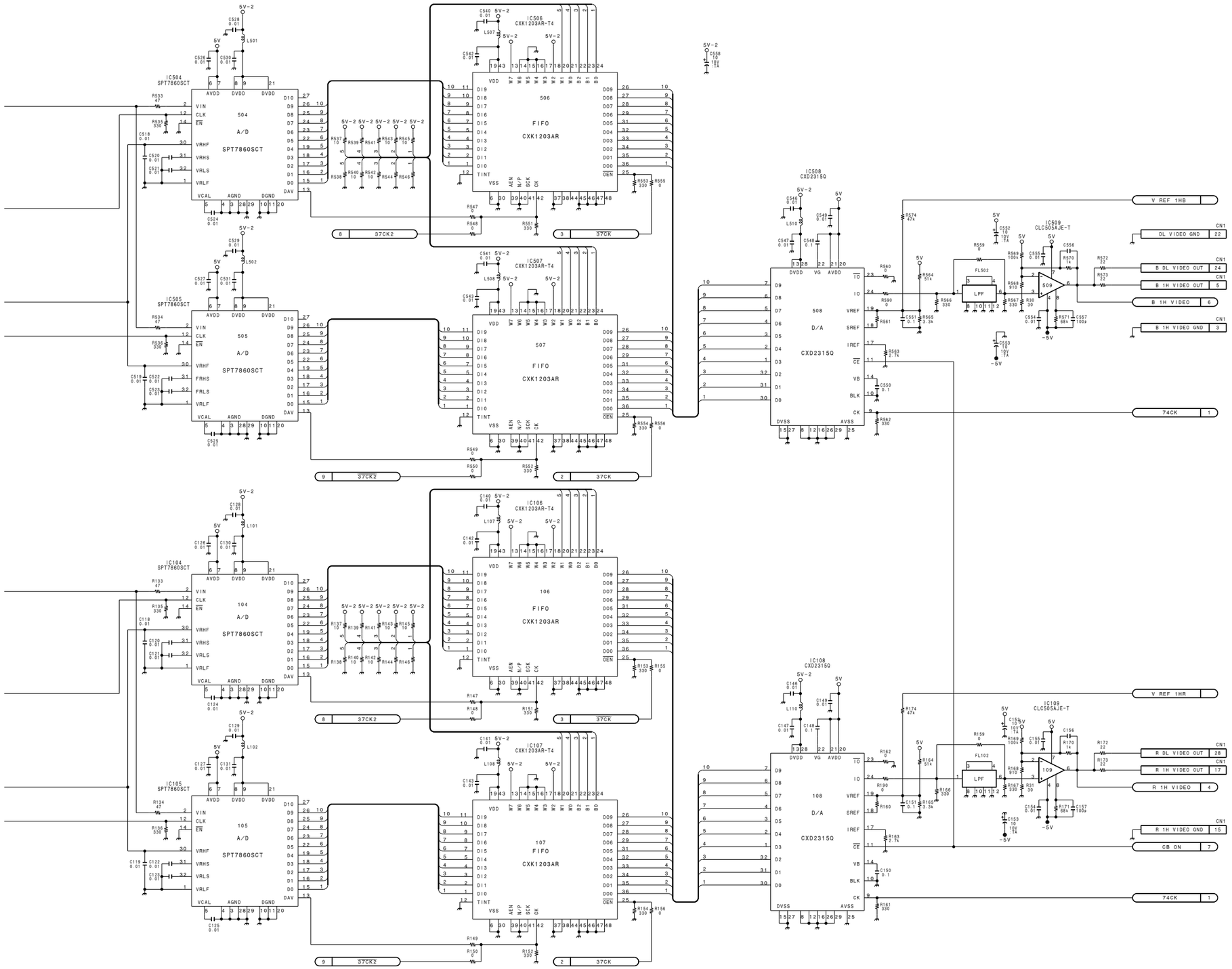

DL-65 (1/2)
BOARD NO. 1-660-239-14
LOT NO. 703-
B-¥HDC750-DL65-14

HDC-700/750
HDCA-750

5-11 (a) 5-11 (a)

I J K L M N O P

HDC-700 : S/N 10078 and Higher
HDC-750 : S/N 10111 and Higher

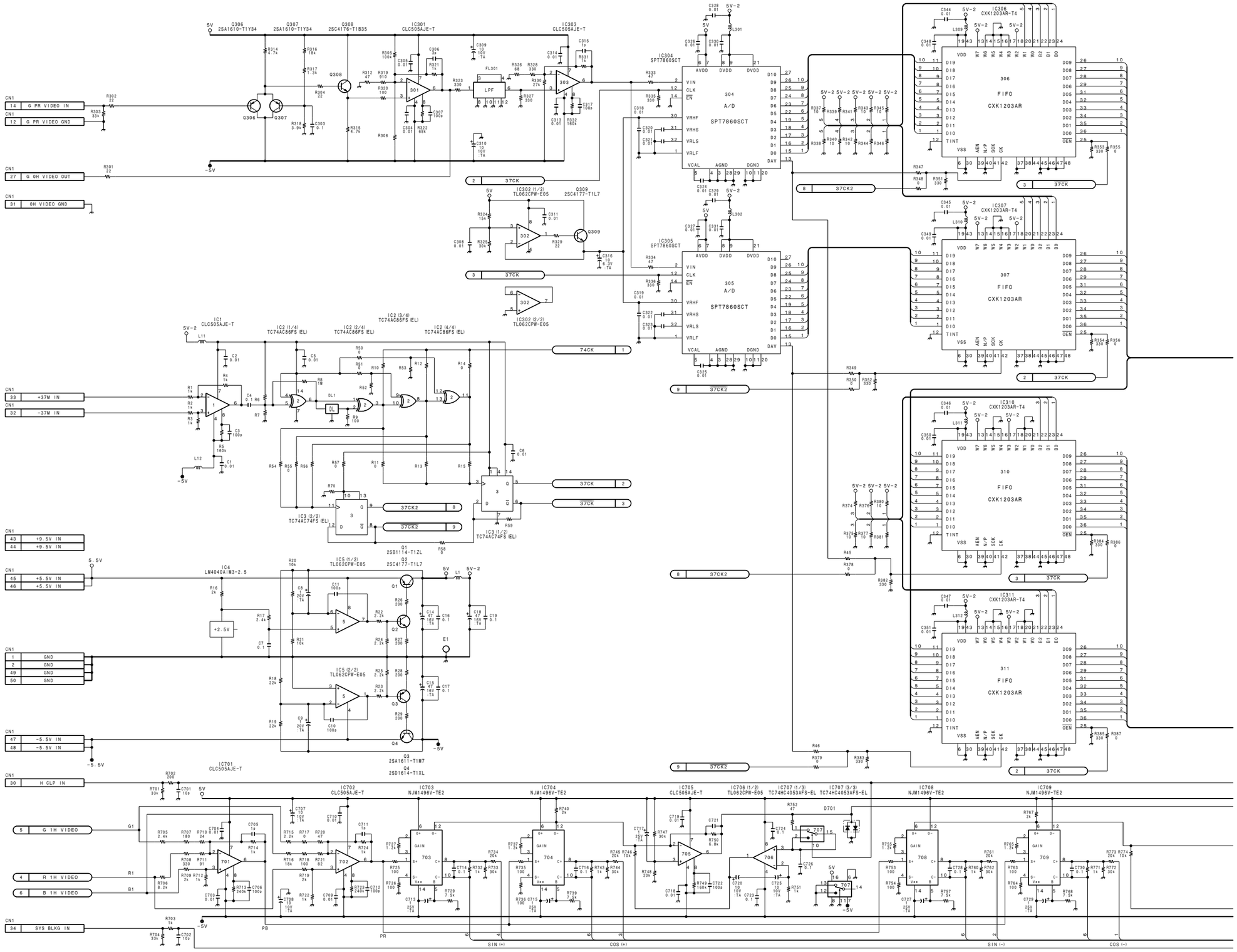

5-12 (a) 5-12 (a)

HDC-700/750
HDCA-750

http://getMANUAL.com

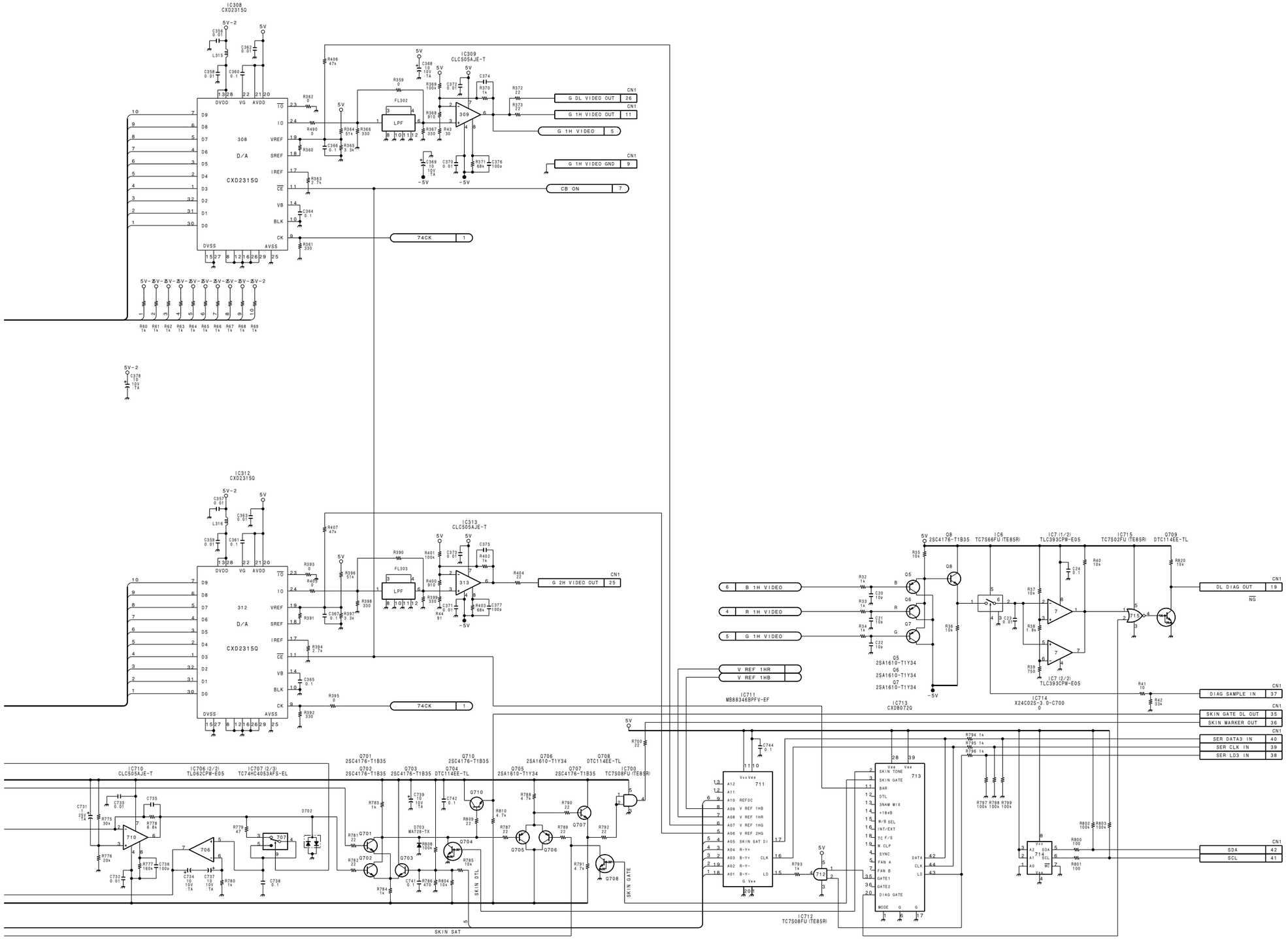

HDC-700/750
HDCA-750

5-13 (a)

5-13 (a)

DL-65 (2/2)

BOARD NO. 1-660-239-14
LOT NO. 703-
B-¥HDC750-DL65-14

DL-65 (1/2) HDC-700/750

HDC-700 : S/N 10001 through 10077
HDC-750 : S/N 10001 through 10110

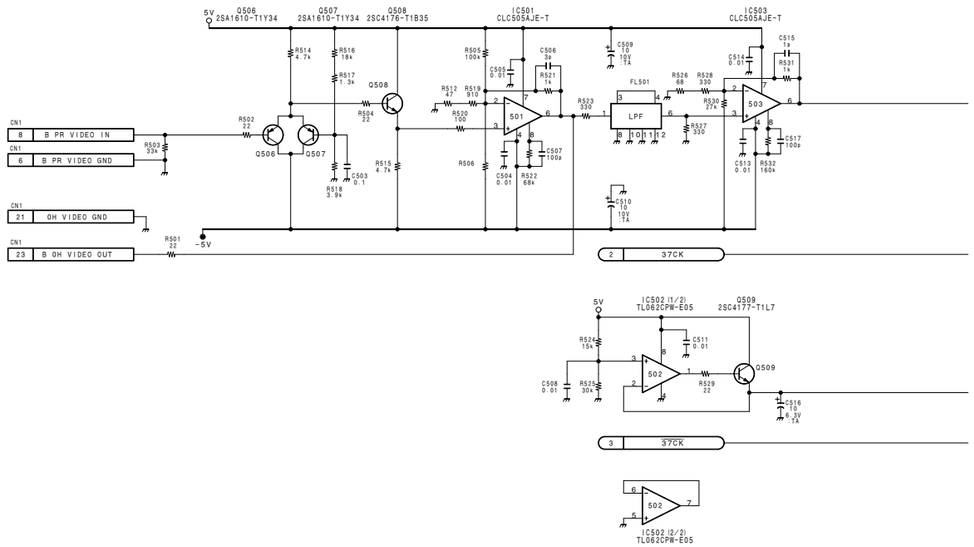

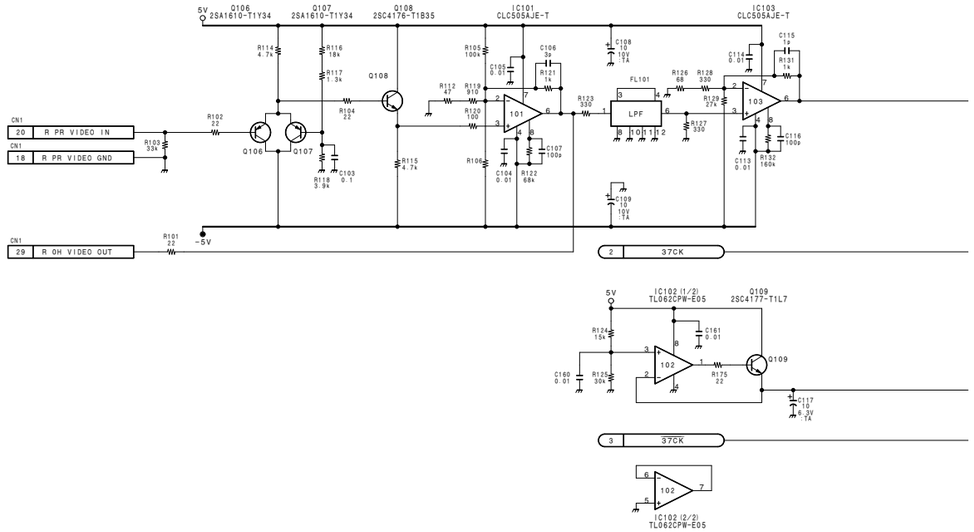

5-10

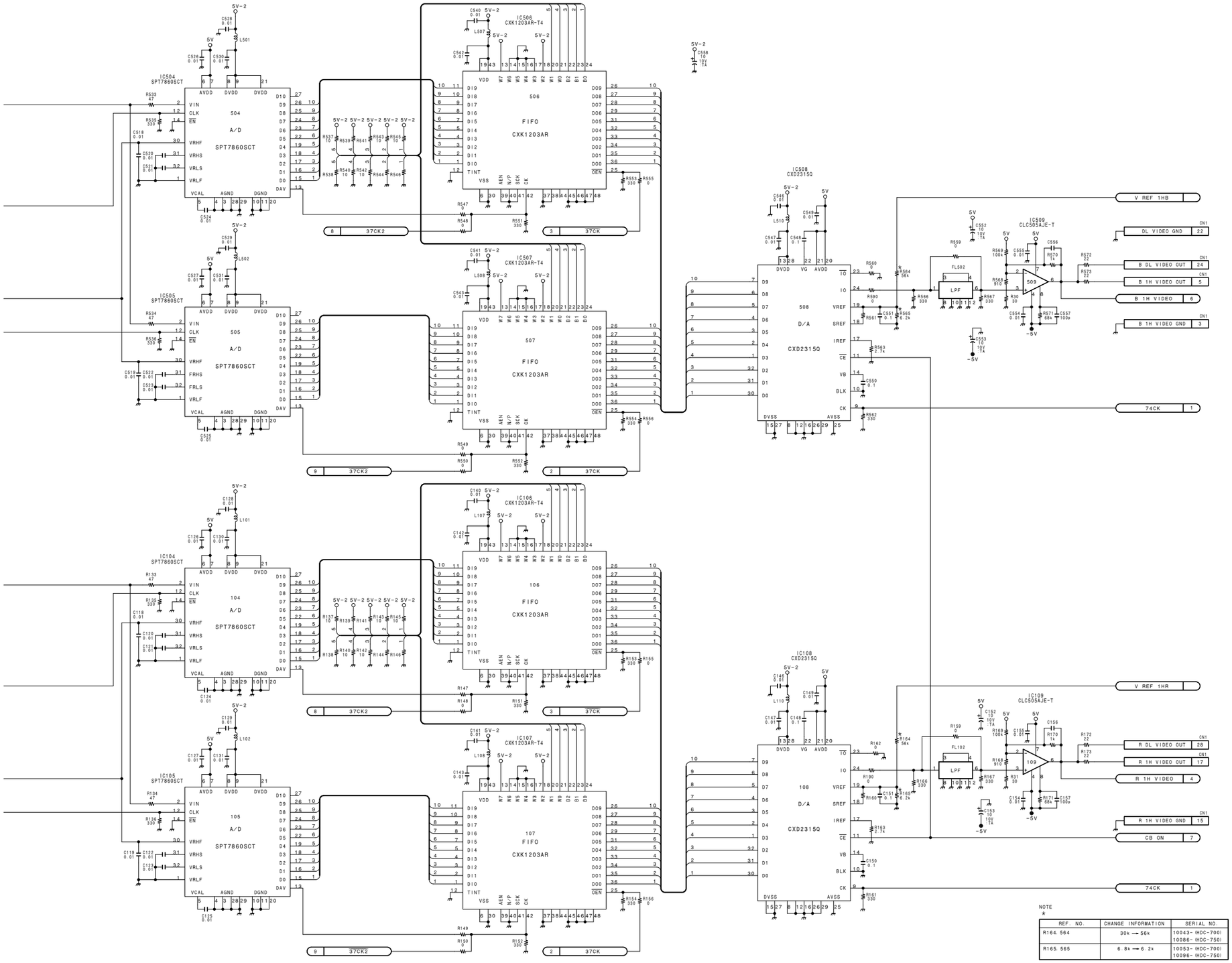

NOTE
*

REF. NO.	CHANGE INFORMATION	SERIAL NO.
R164, 564	30k → 56k	10043- (HDC-700) 10086- (HDC-750)
R165, 565	6.8k → 6.2k	10053- (HDC-700) 10096- (HDC-750)

DL-65 (1/2)

BOARD NO. 1-660-239-11/12/13
LOT NO. 511-
B-¥HDC750-DL65-13

HDC-700 : S/N 10001 through 10077
HDC-750 : S/N 10001 through 10110

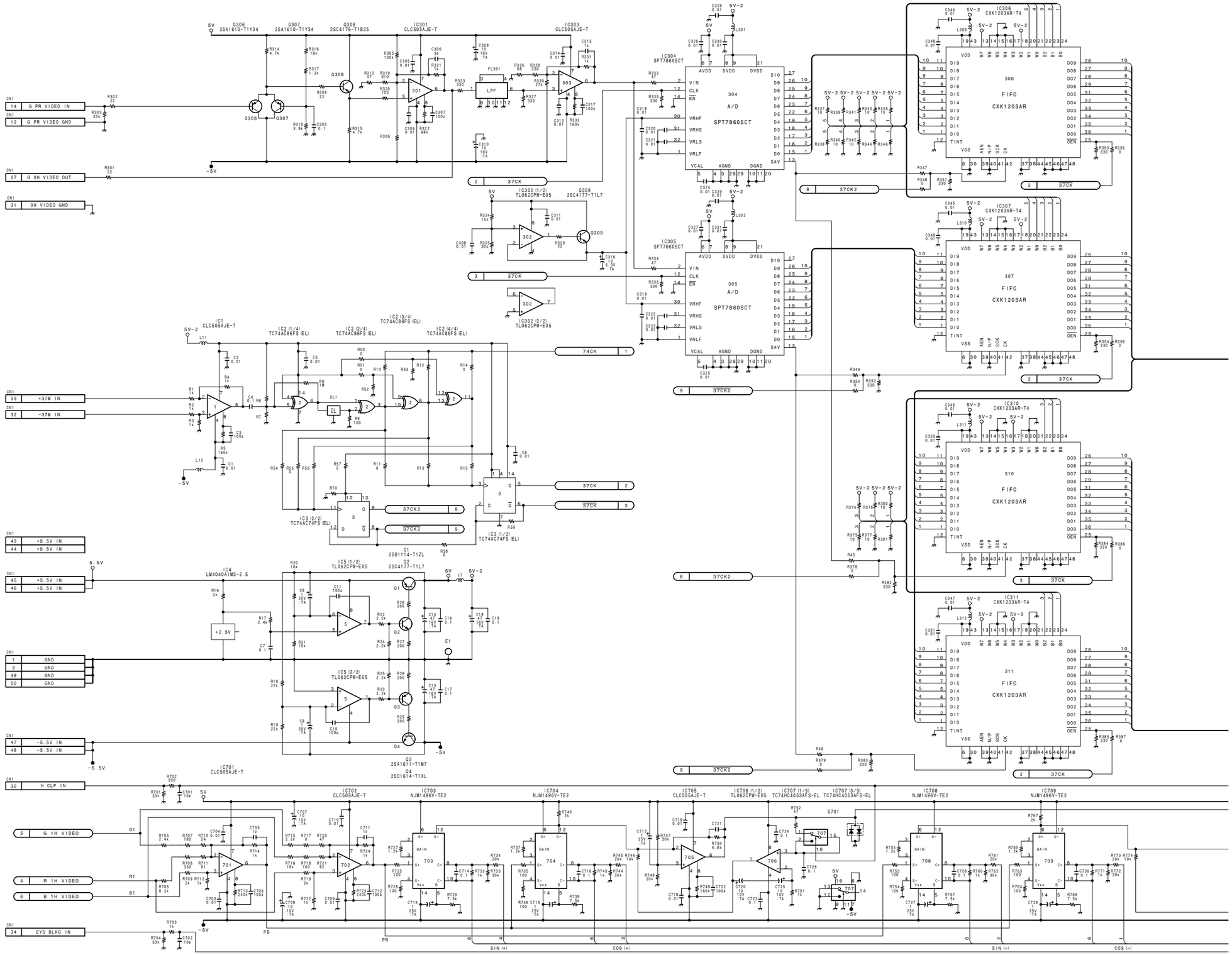

HDC-700/750
HDCA-750

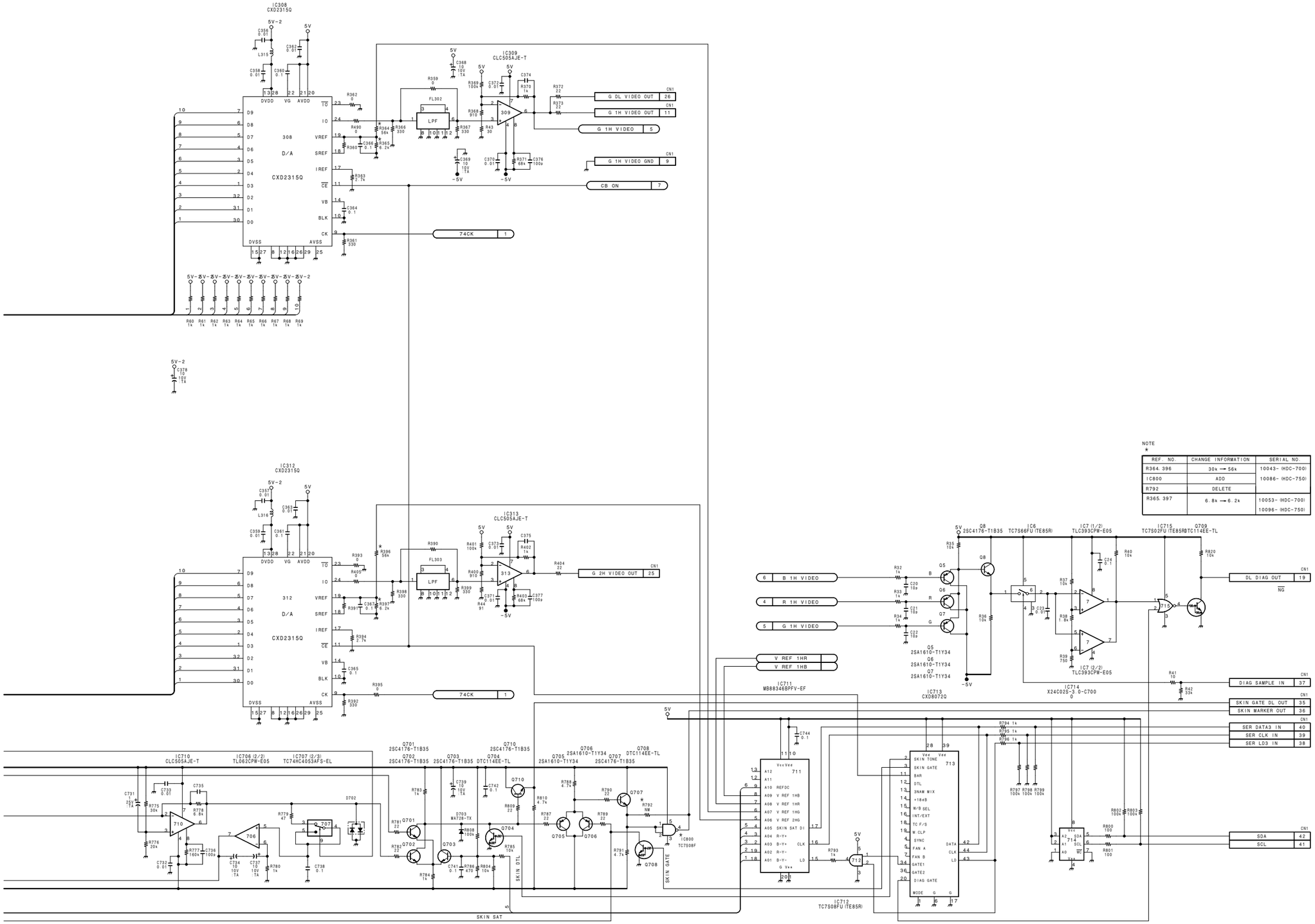

NOTE
*

REF. NO.	CHANGE INFORMATION	SERIAL NO.
R364. 396	30k → 56k	10043- (HDC-700)
IC800	ADD	10086- (HDC-750)
R792	DELETE	
R365. 397	6.8k → 6.2k	10053- (HDC-700) 10096- (HDC-750)

DL-65 (2/2)

BOARD NO. 1-660-239-11/12/13
LOT NO. 511-
B-¥HDC750-DL65-13

HDC-700
HDC-750

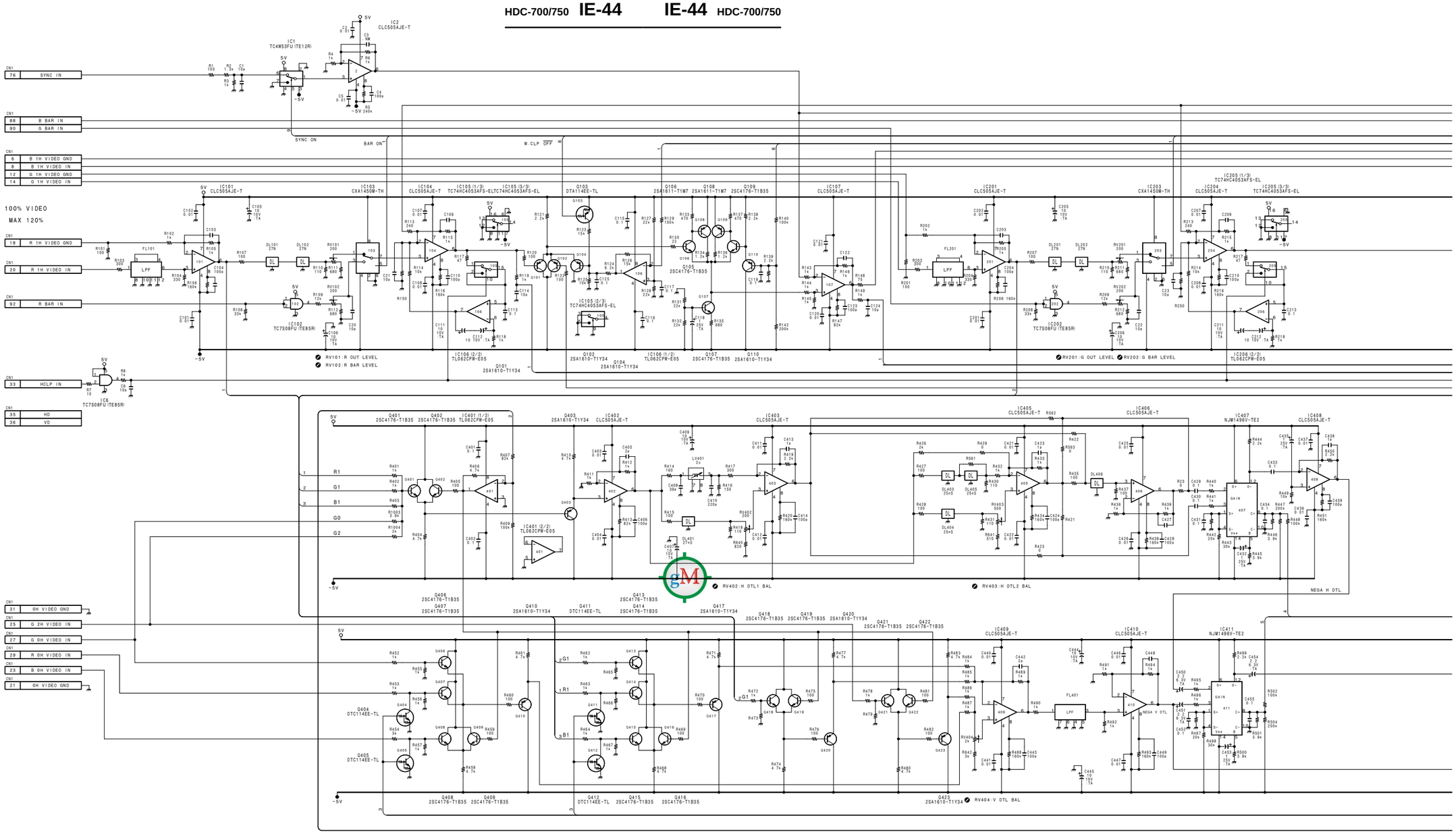

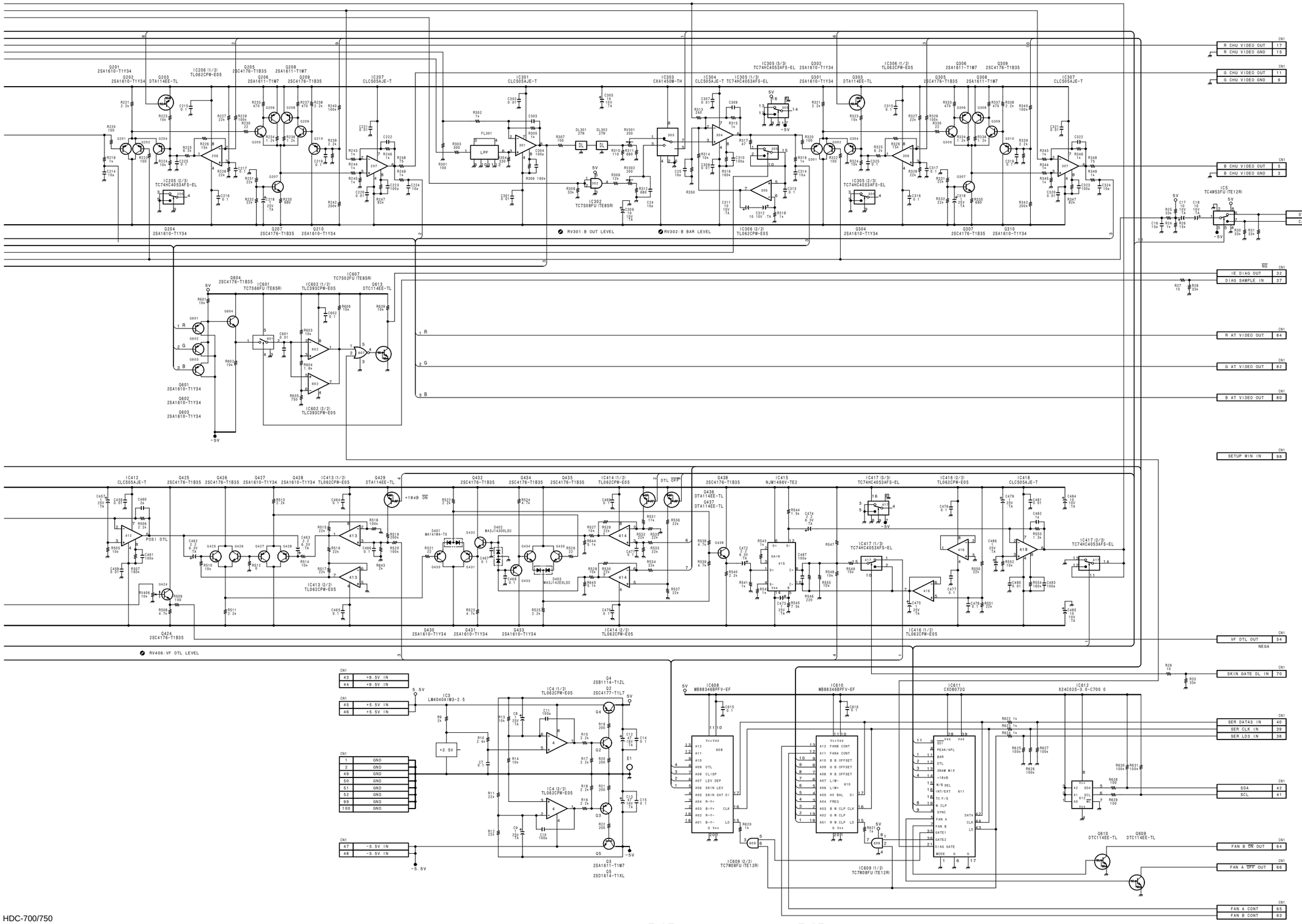

IE-44

BOARD NO. 1-660-240-11/12
LOT NO. 511-

B-¥HDC750-IE44-13

HDC-700
HDC-750

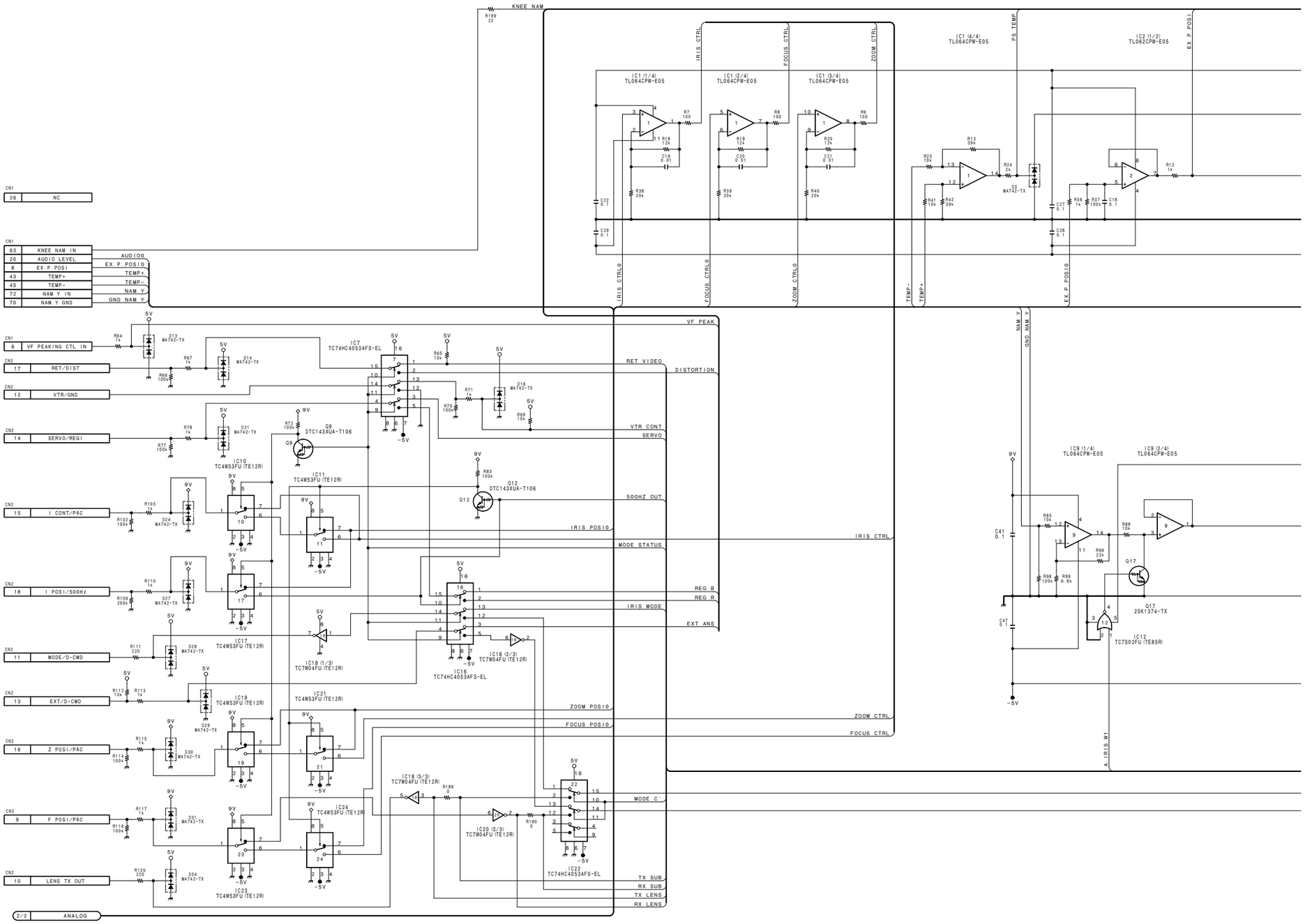

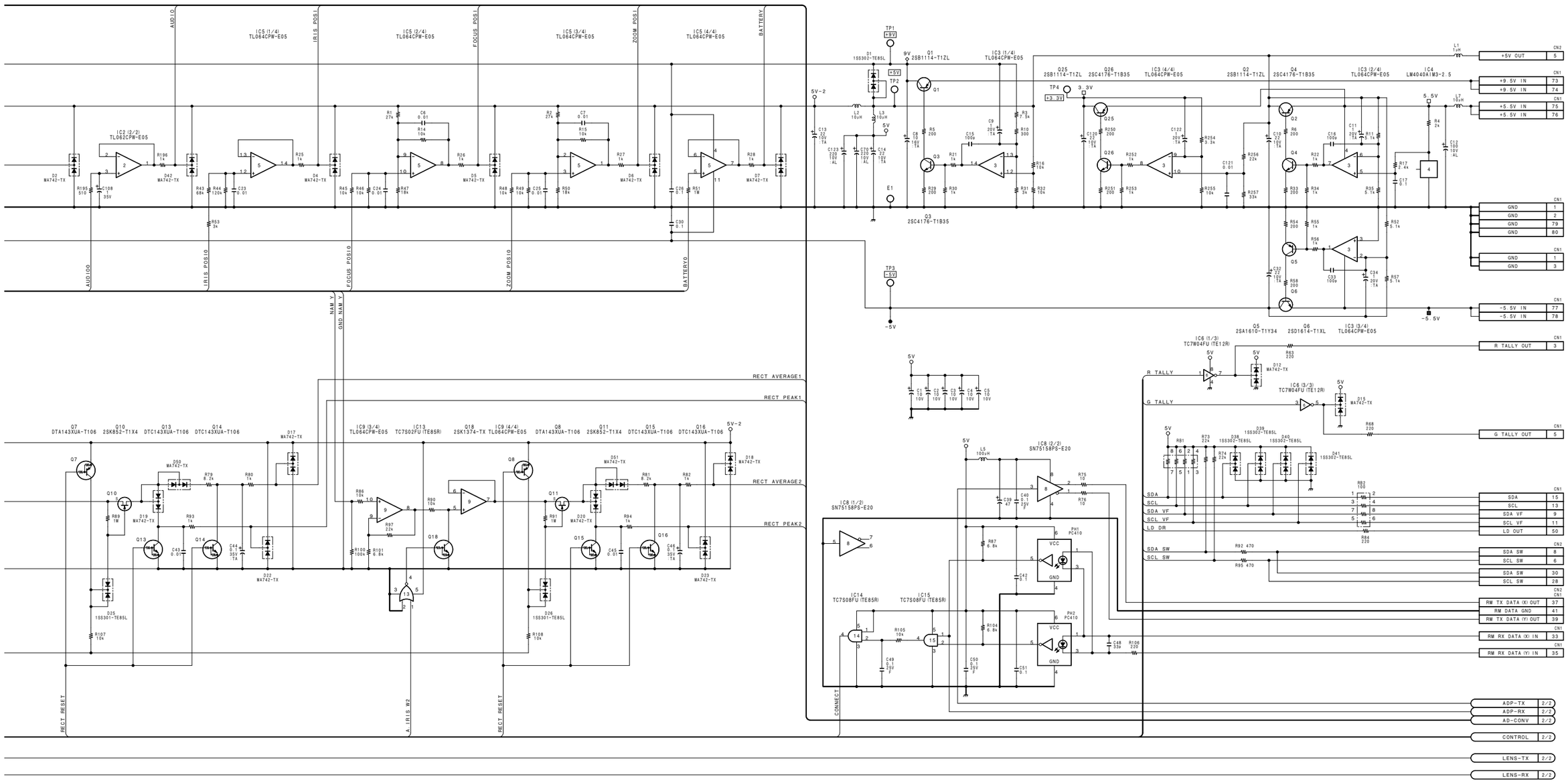

IF-569 (1/2)

BOARD NO. 1-660-238-11/12
LOT NO. 511-
B-¥HDC750-IF569-12

HDC-700
HDC-750

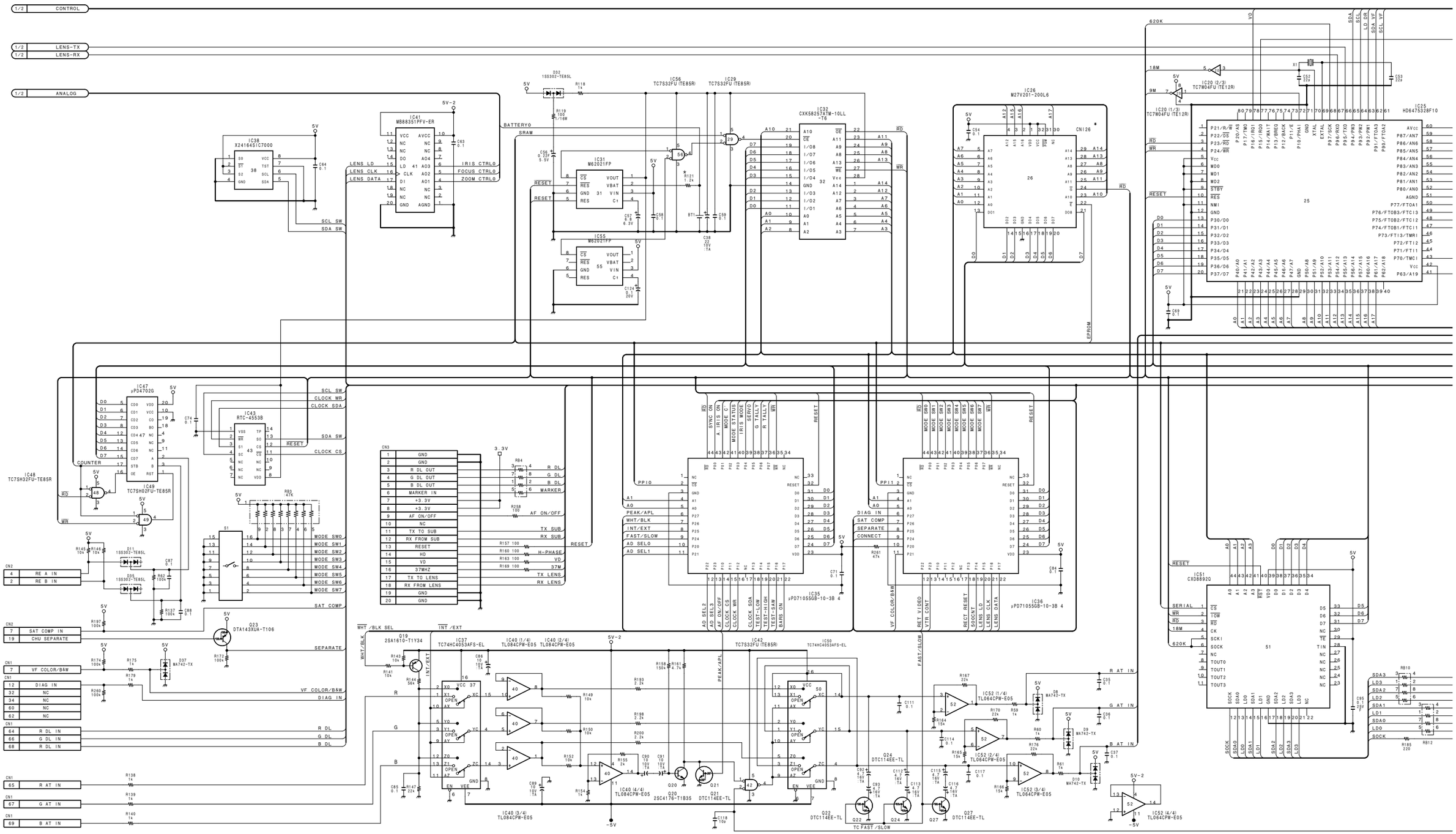

http://getMANUAL.com

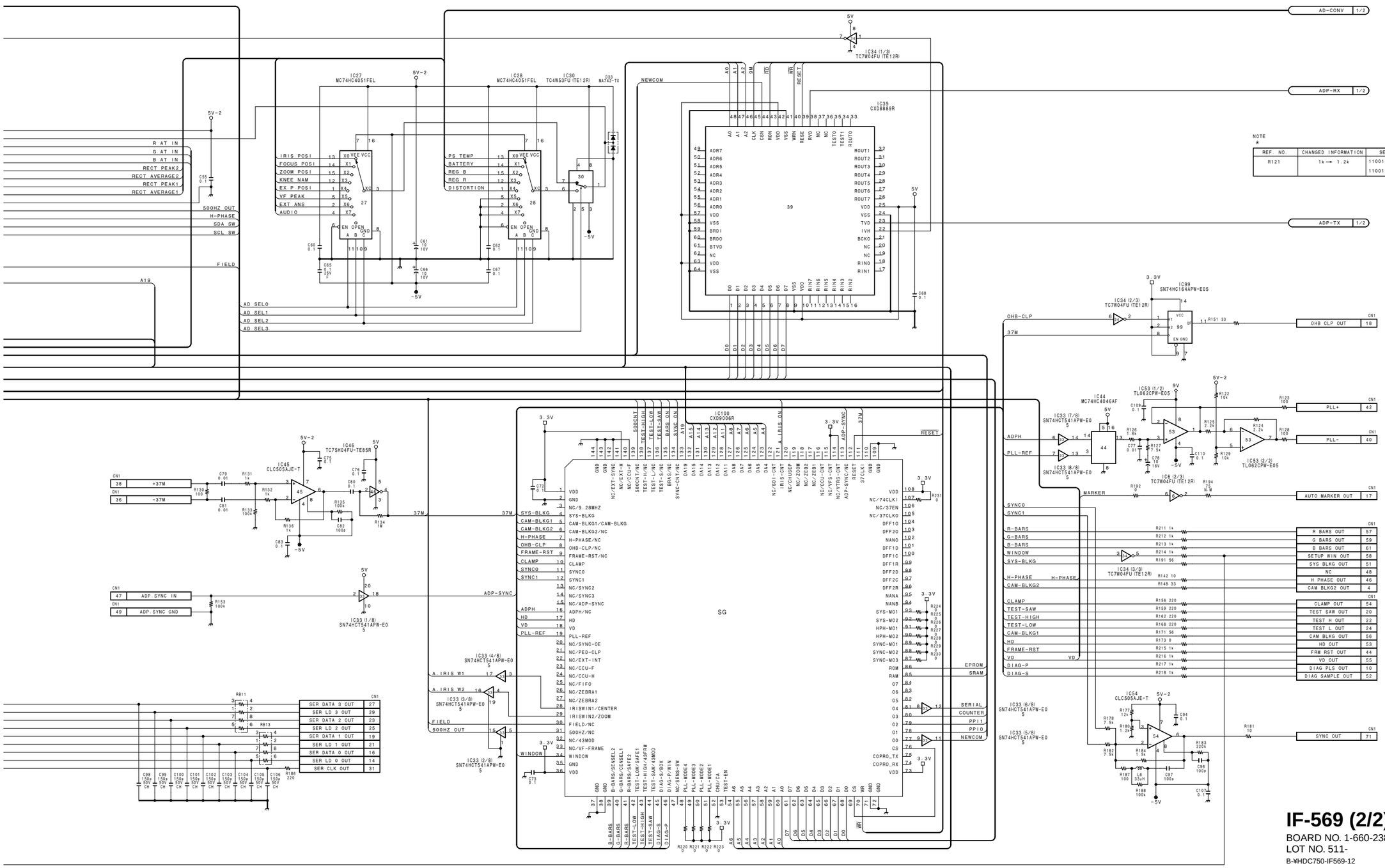

IF-569 (2/2)

BOARD NO. 1-660-238-11/12
LOT NO. 511-
B-¥HDC750-IF569-12

HDC-700 : S/N 10053 and Higher
HDCA-750 : S/N 10096 and Higher

5-20 (a) 5-20 (a)

HDC-700/750
HDCA-750

A B C D E F G H

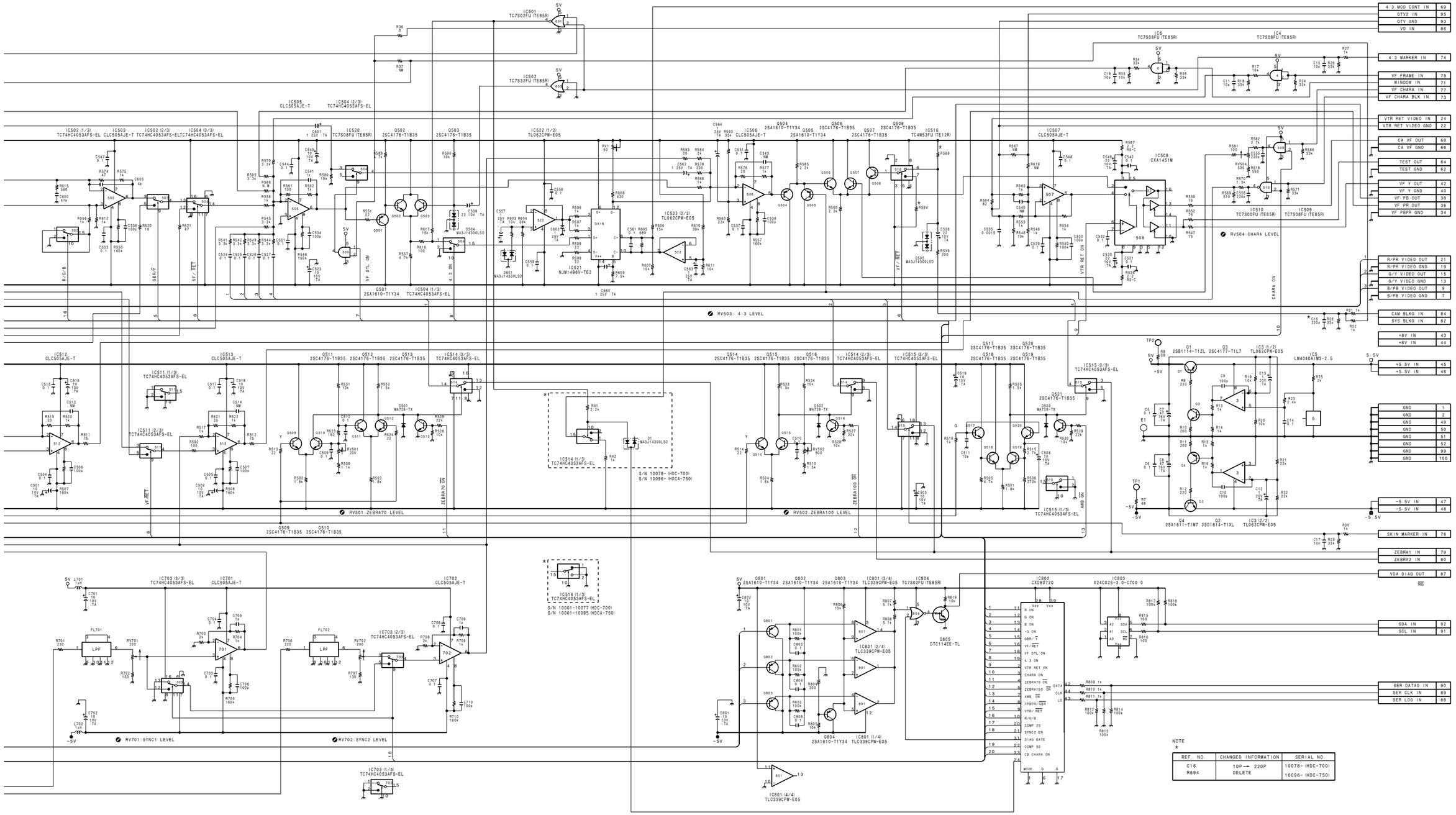

NOTE
*

REF. NO.	CHANGED INFORMATION	SERIAL NO.
C16	10P → 220P	10078- (HDC-700)
R594	DELETE	10096- (HDCA-750)

VDA-31

BOARD NO. 1-660-243-13/14
LOT NO. 611-
B-¥HDCA750-VDA31-14

DU-24

BOARD NO. 1-663-250-11
LOT NO. 603-
B-¥HDCA750-DU24-11

HDC-700 : S/N 10001 through 10052
HDCA-750 : S/N 10001 through 10095

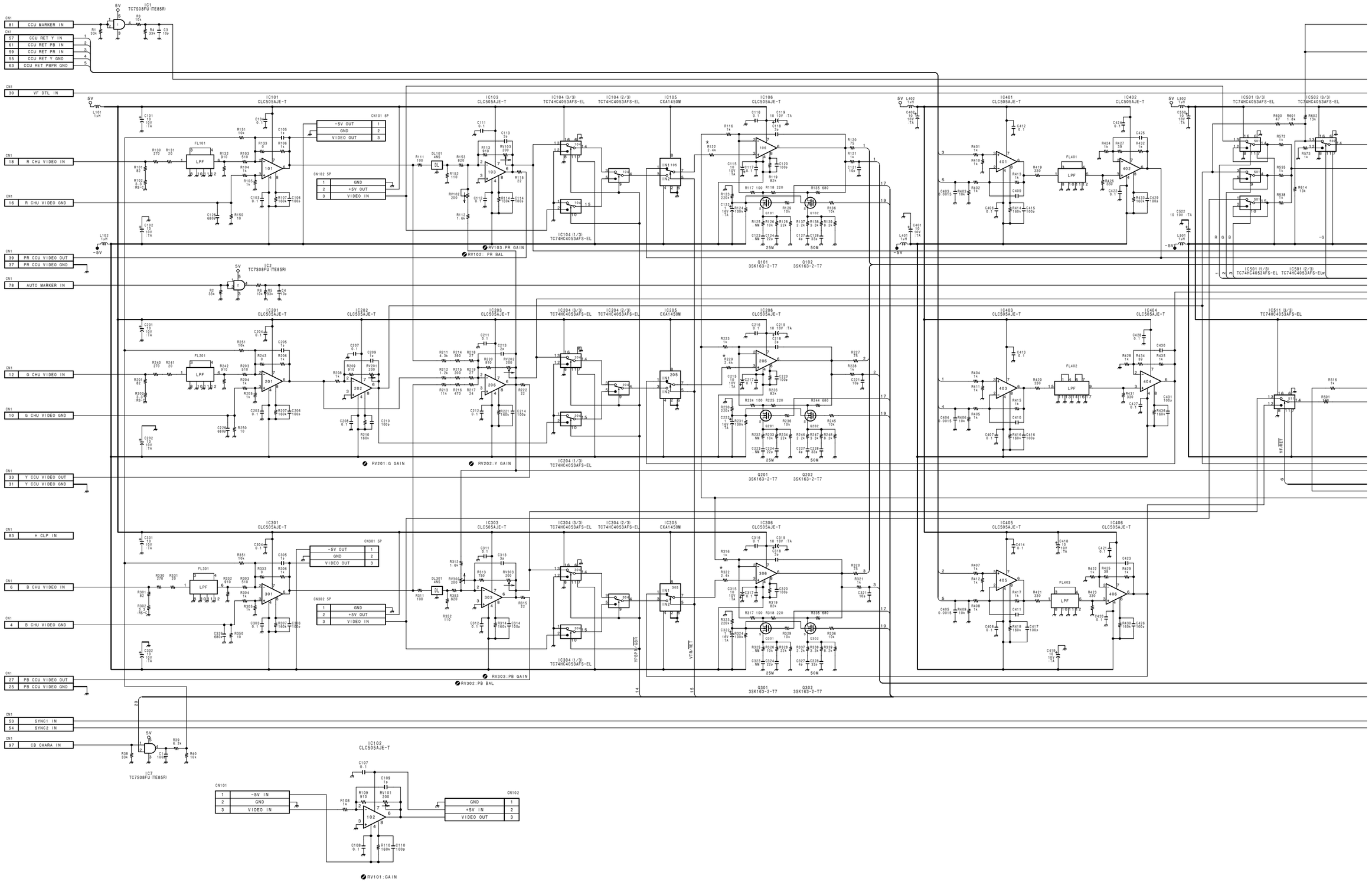

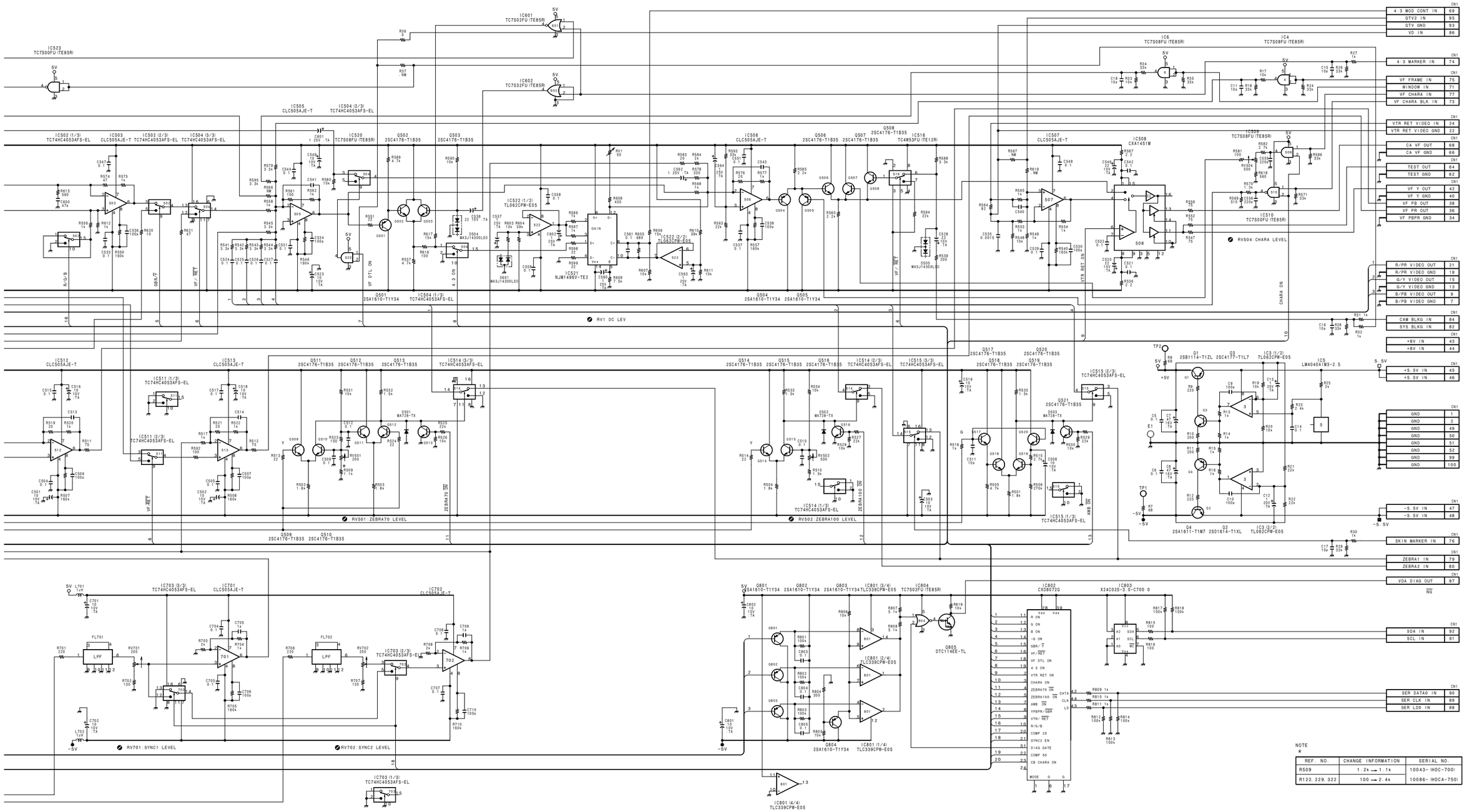

NOTE
*

REF. NO.	CHANGE INFORMATION	SERIAL NO.
R509	1.2k → 1.1k	10043- (HDC-700)
R122, 229, 322	100 → 2.4k	10086- (HDCA-750)

VDA-31

BOARD NO. 1-660-243-11/12
LOT NO. 511-
B-¥HDCA750-VDA31-12

DU-24

BOARD NO. 1-663-250-11
LOT NO. 603-
B-¥HDCA750-DU24-11

HDC-700 : S/N 11006 and Higher, 13001 and Higher
HDCA-750 : S/N 11006 and Higher

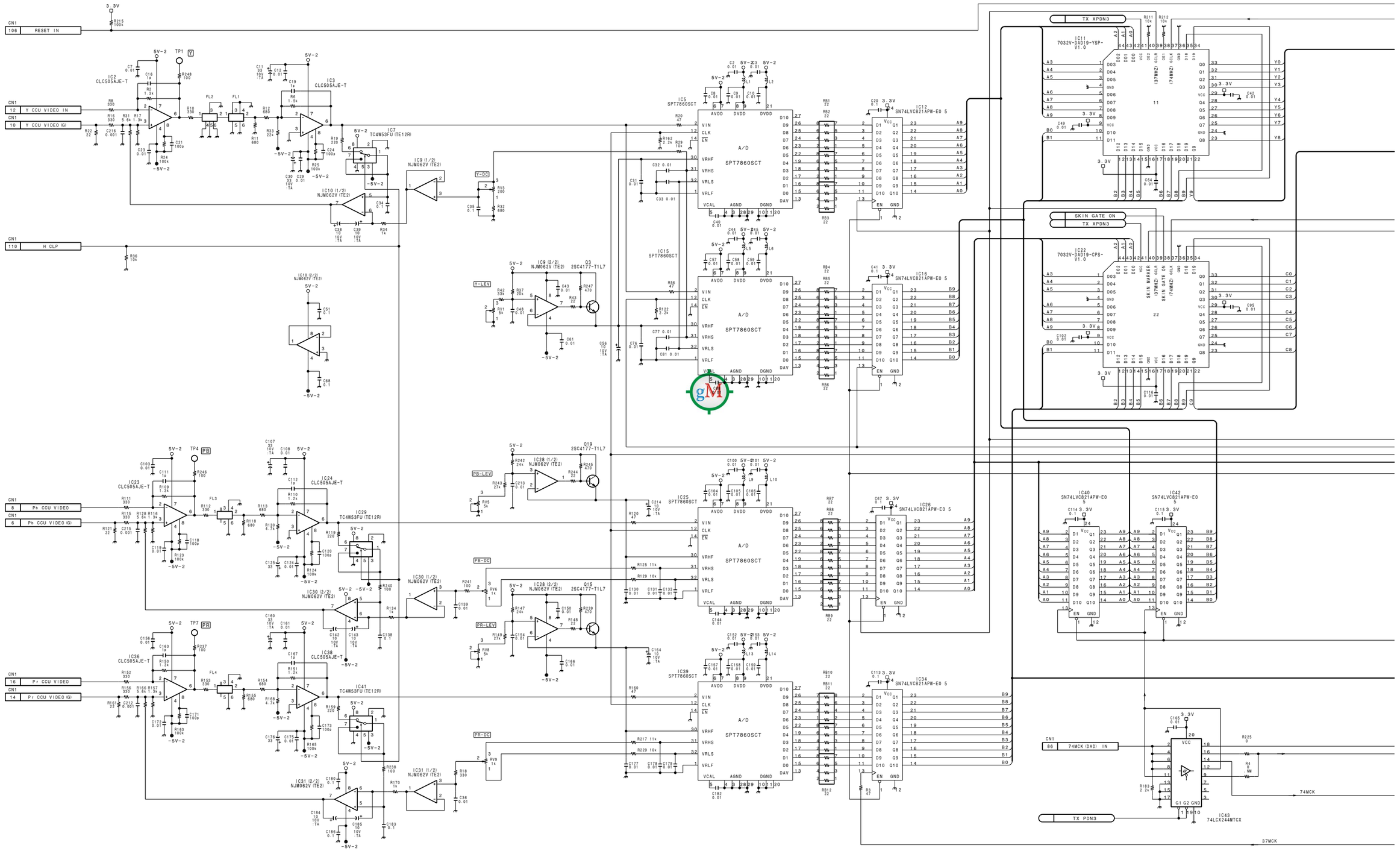

5-22 (a) 5-22 (a)

HDC-700/750
HDCA-750

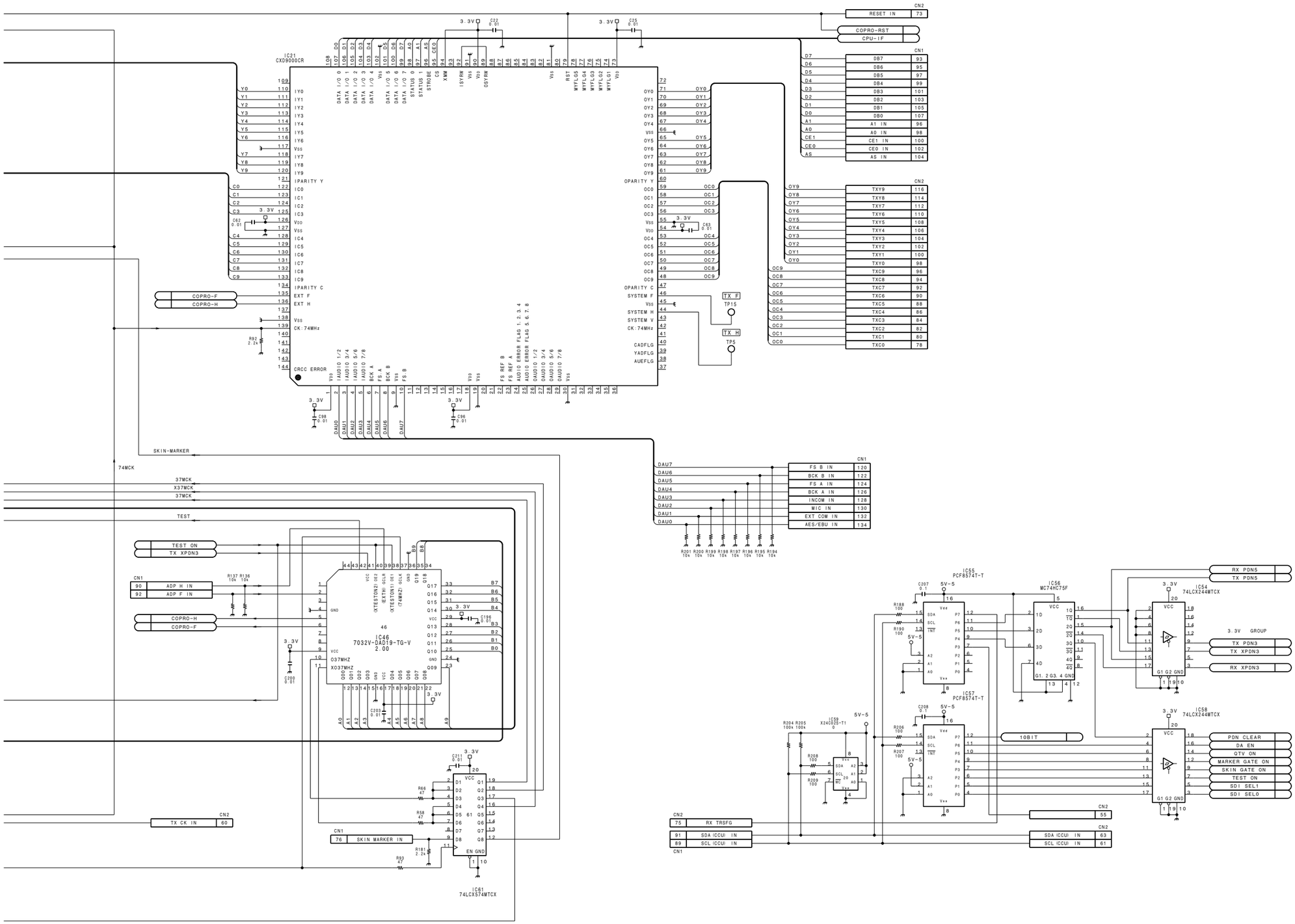

DAD-19 (1/2)
BOARD NO. 1-660-252-14
LOT NO. 710-
B-¥HDCA750-DAD19-14

HDC-700 : S/N 11006 and Higher, 13001 and Higher
HDCA-750 : S/N 11006 and Higher

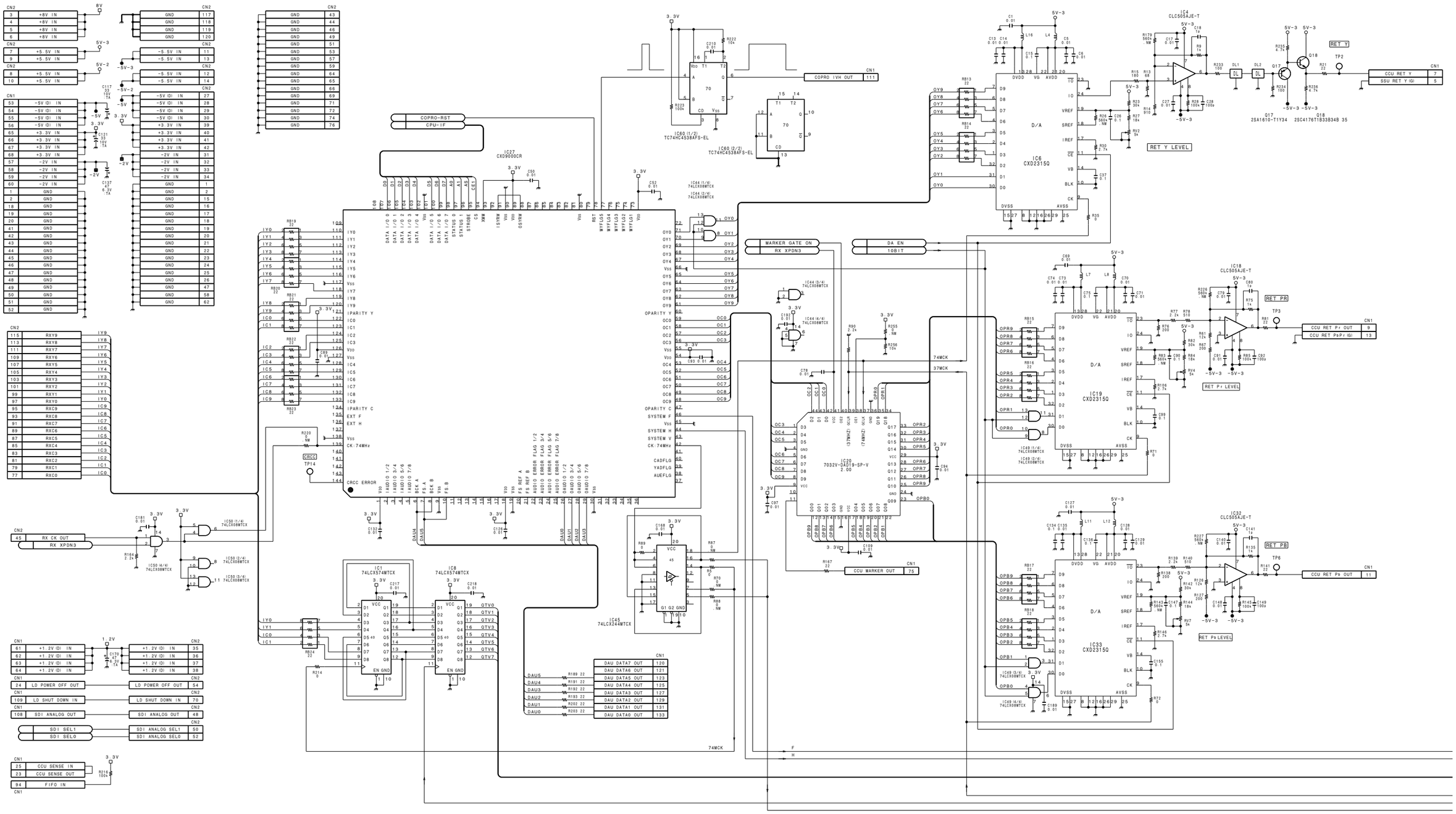

5-24 (a) 5-24 (a)

HDC-700/750
HDCA-750

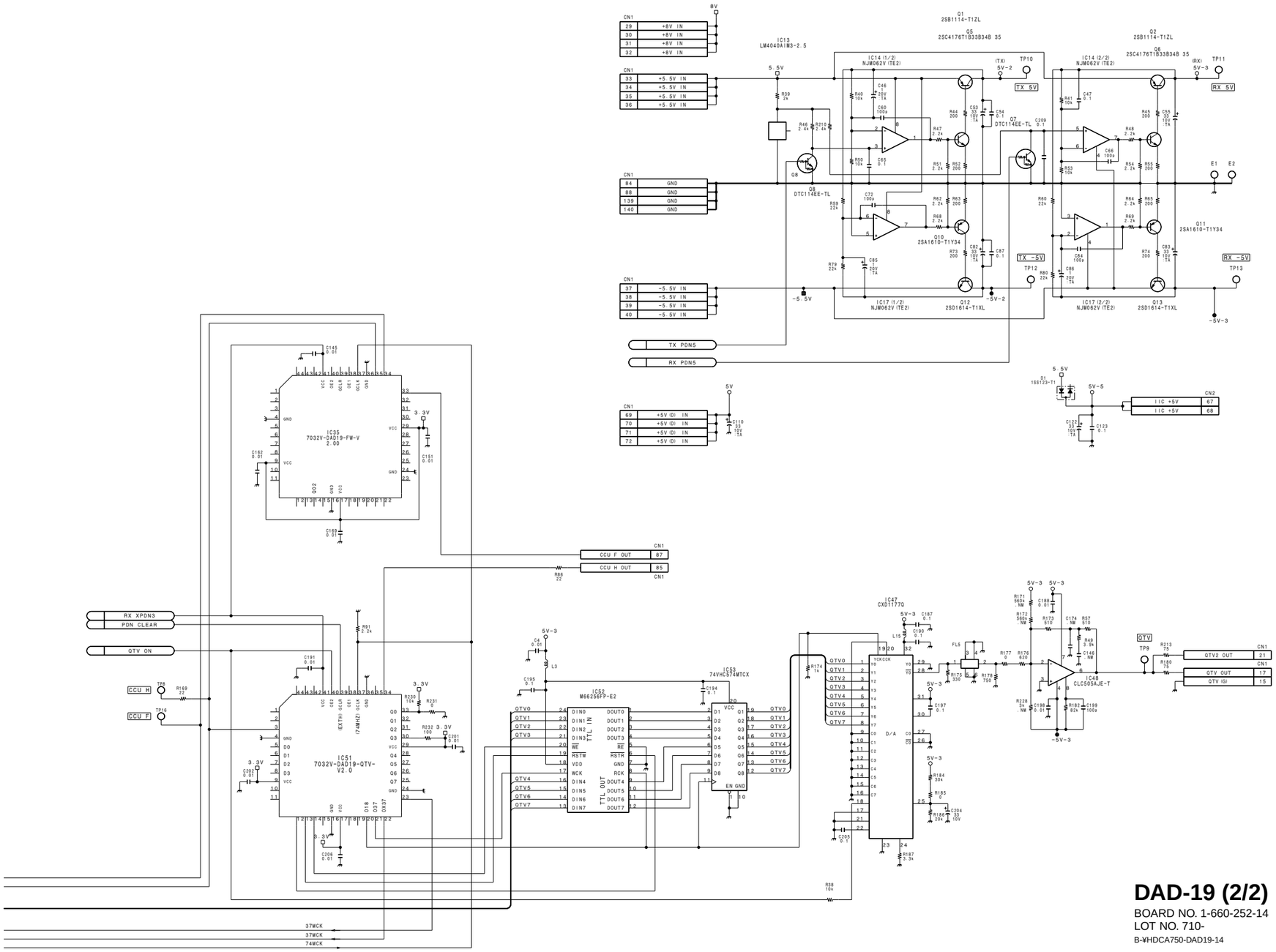

DAD-19 (2/2)

BOARD NO. 1-660-252-14
LOT NO. 710-
B-¥HDCA750-DAD19-14

HDC-700 : S/N 10001 through 11005
HDCA-750 : S/N 10001 through 11005

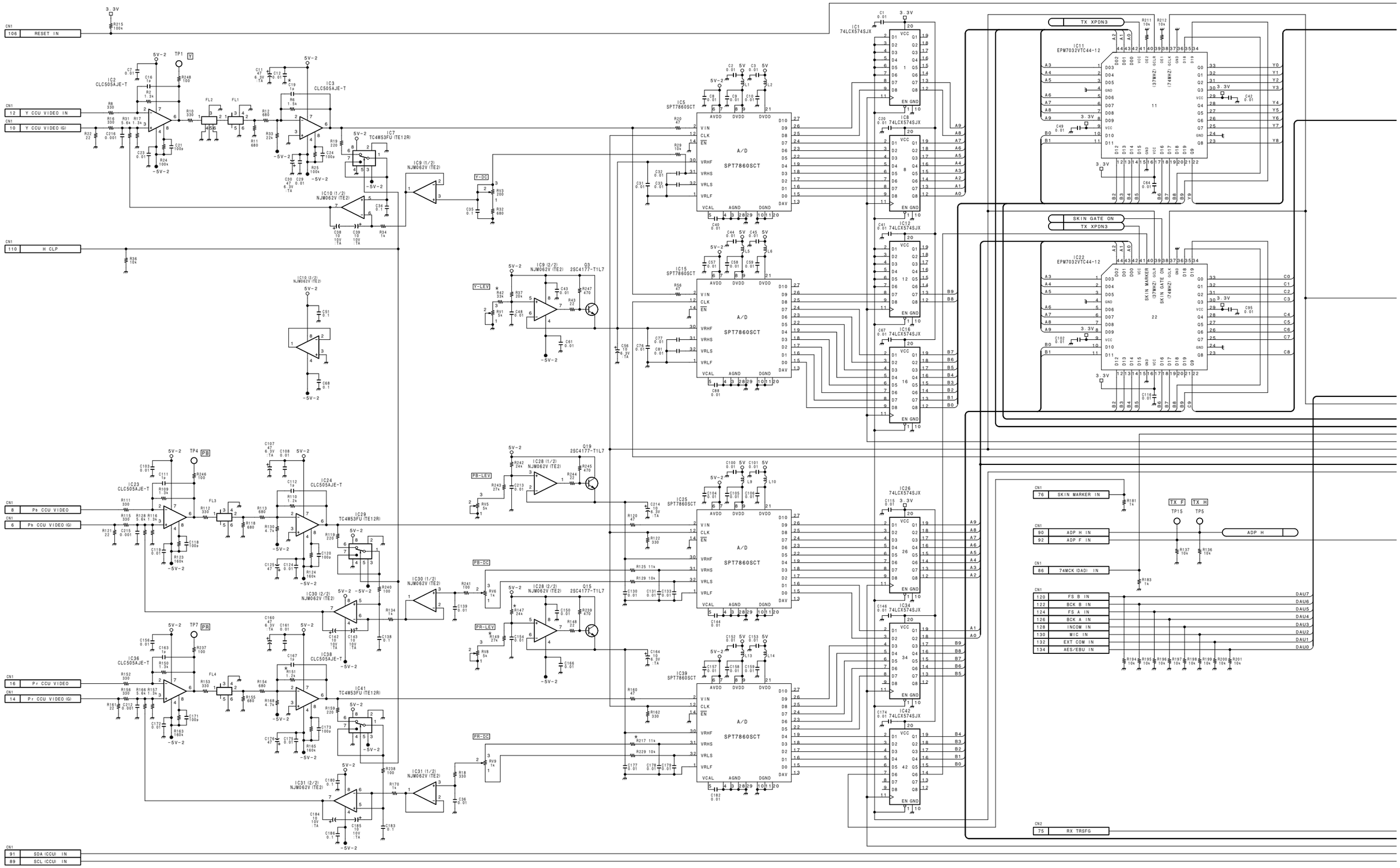

http://getMANUAL.com

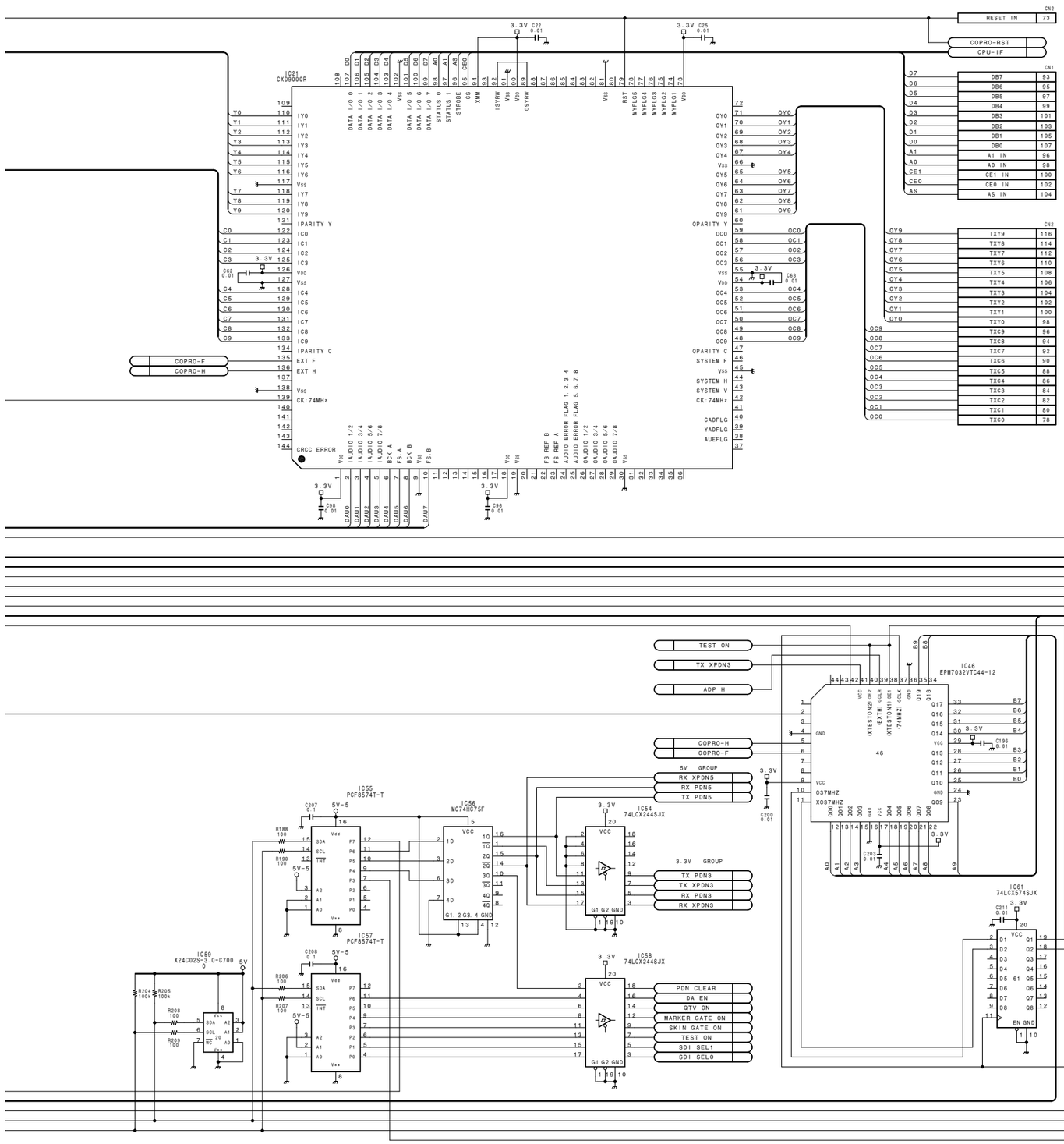

NOTE
*

REF. NO.	CHANGE INFORMATION	SERIAL NO.
R147	20k ⟶ 24k	10043- (HDC-700)
R149	30k ⟶ 27k	10086- (HDCA-750)
R151	1k ⟶ 1.2k	
R217	10k ⟶ 11k	
R42	30k ⟶ 33k	10078- (HDC-700)
		10116- (HDCA-750)
C19	DELETE	10078- (HDC-700)
		10126- (HDCA-750)

DAD-19 (1/2)

BOARD NO. 1-660-252-11/12/13
LOT NO. 511-
B-¥HDCA750-DAD19-12

HDC-700 : S/N 10001 through 11005
HDCA-750 : S/N 10001 through 11005

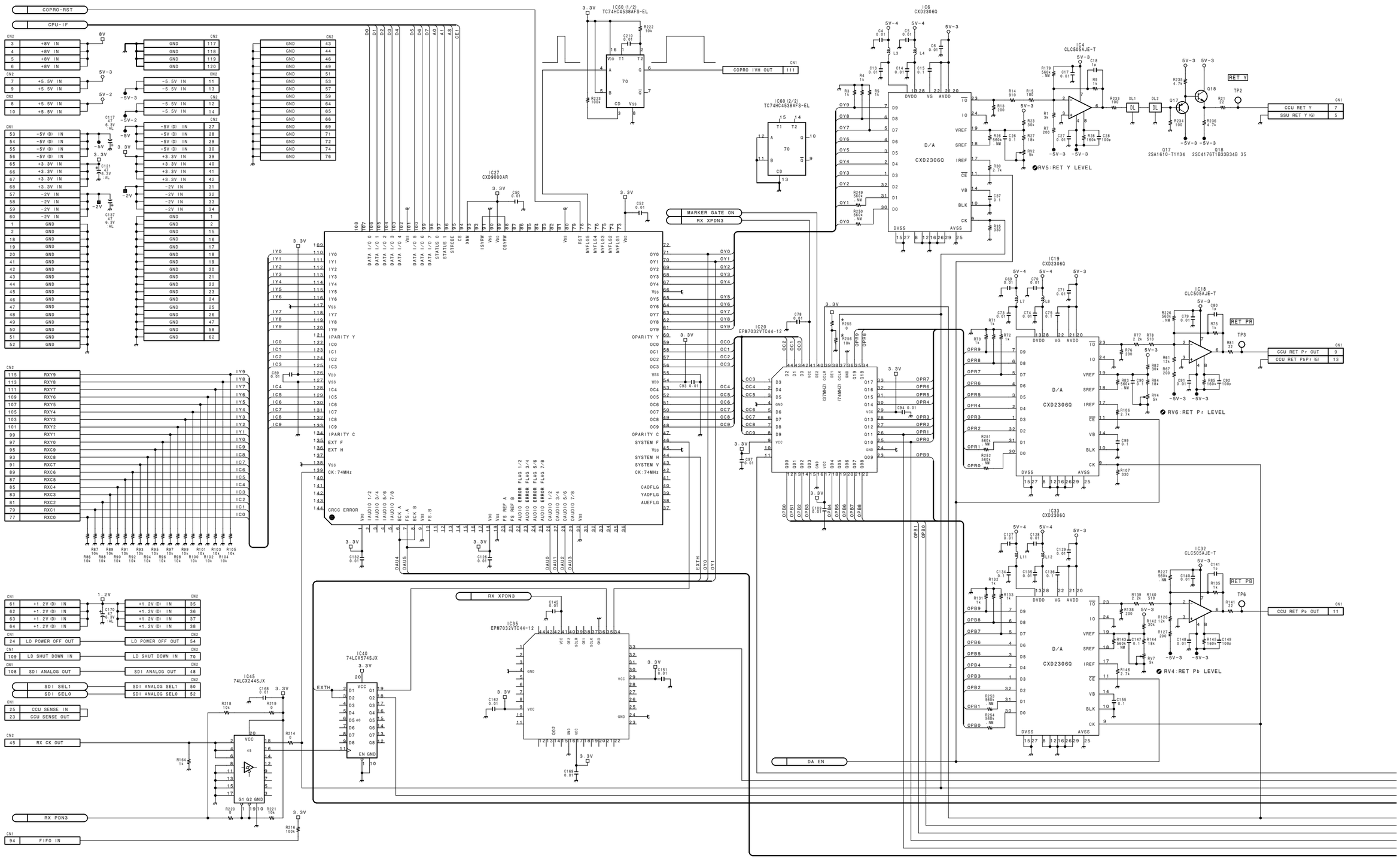

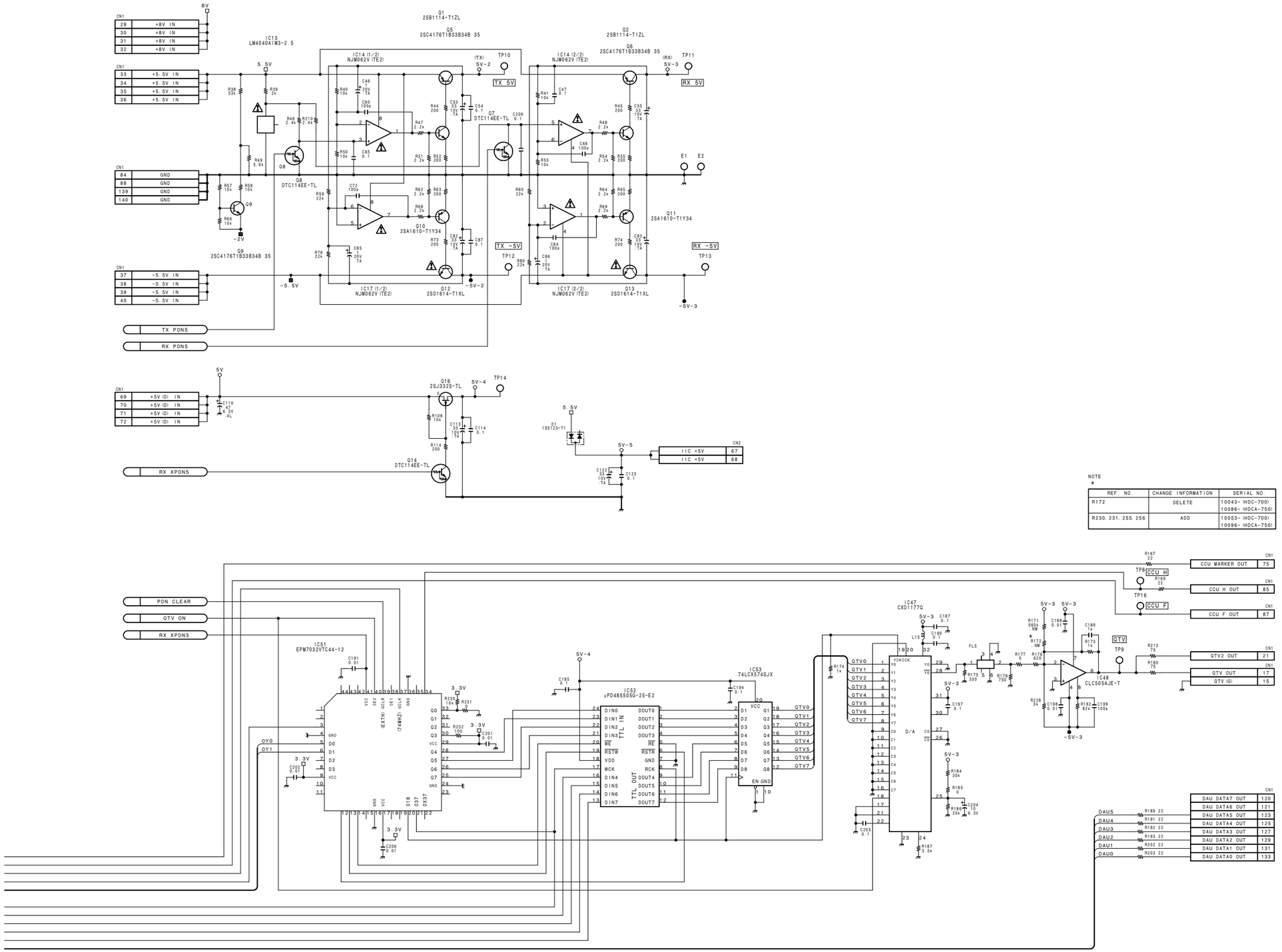

NOTE
*

REF. NO.	CHANGE INFORMATION	SERIAL NO.
R172	DELETE	10043- (HDC-700) 10086- (HDCA-750)
R230. 231. 255. 256	ADD	10053- (HDC-700) 10096- (HDCA-750)

DAD-19 (2/2)

BOARD NO. 1-660-252-11/12/13
LOT NO. 511-
B-¥HDCA750-DAD19-12

HDC-700
HDCA-750

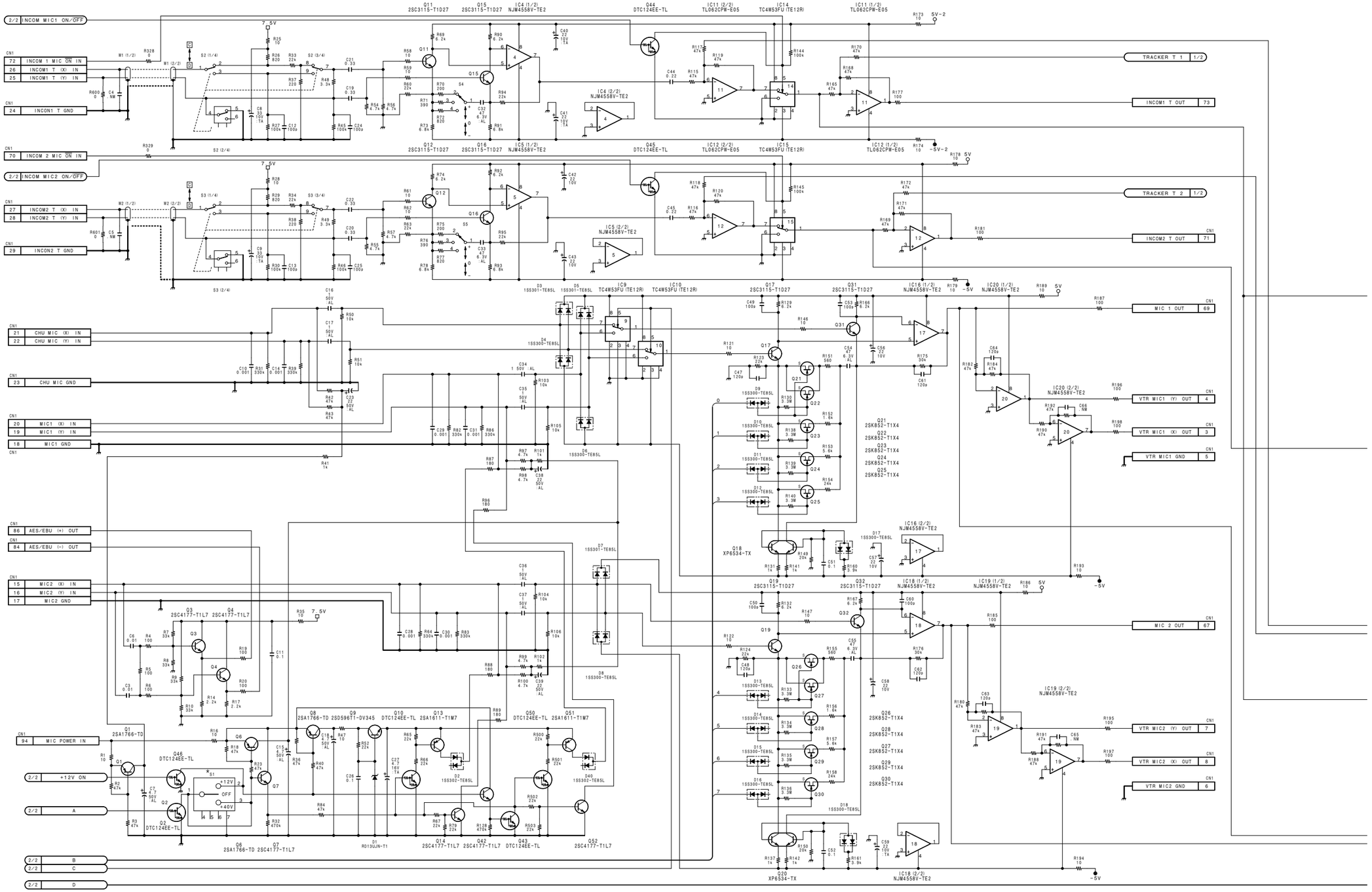

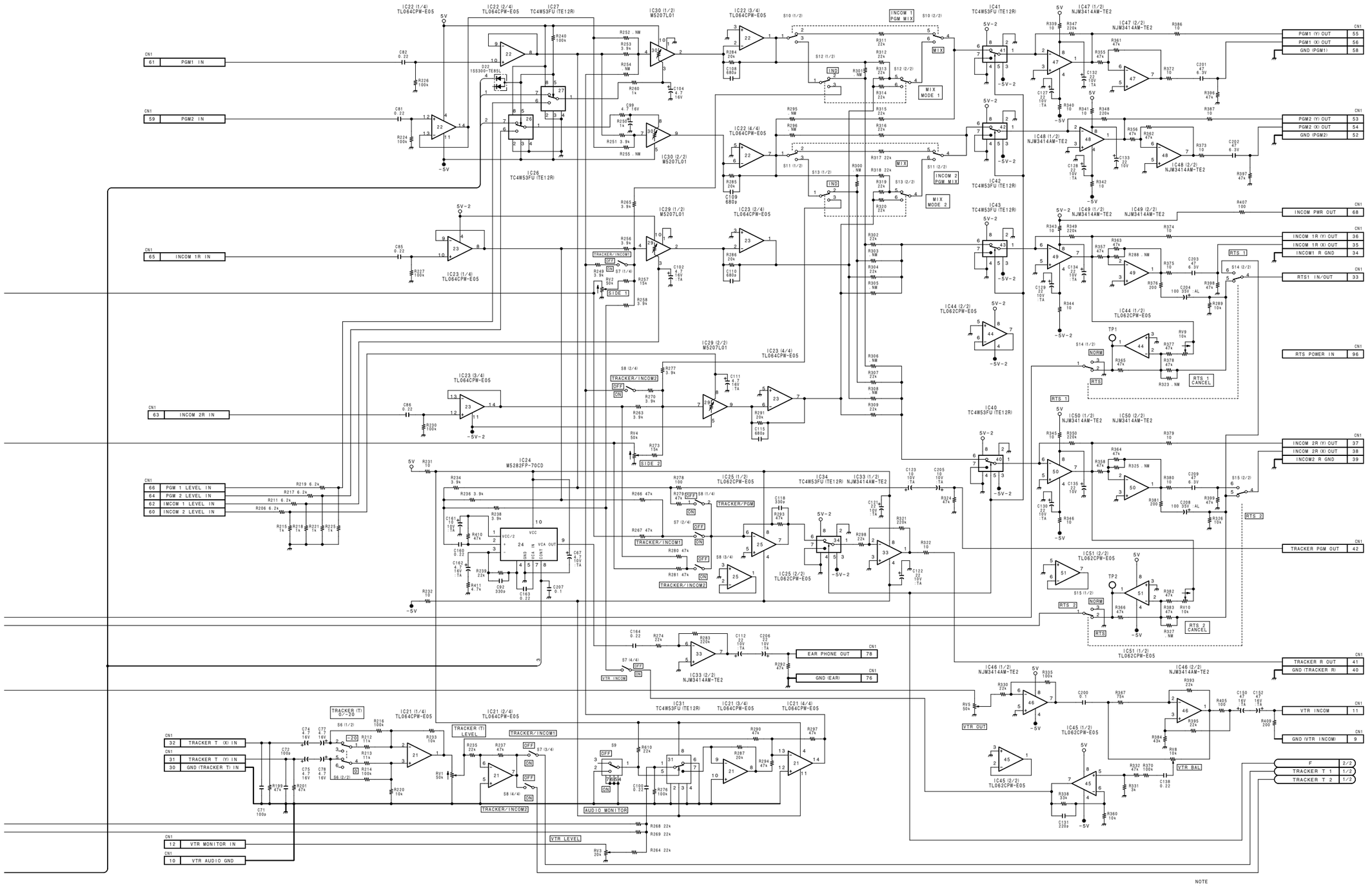

NOTE
*

REF. NO.	CHANGE INFORMATION	SERIAL NO.
S1	DELETE	10078- (HDC-700) 10096- (HDCA-750)

AU-203 (1/2)

BOARD NO. 1-660-244-11/12/13
LOT NO. 511-
B-¥HDCA750-AU203-12

HDC-700
HDCA-750

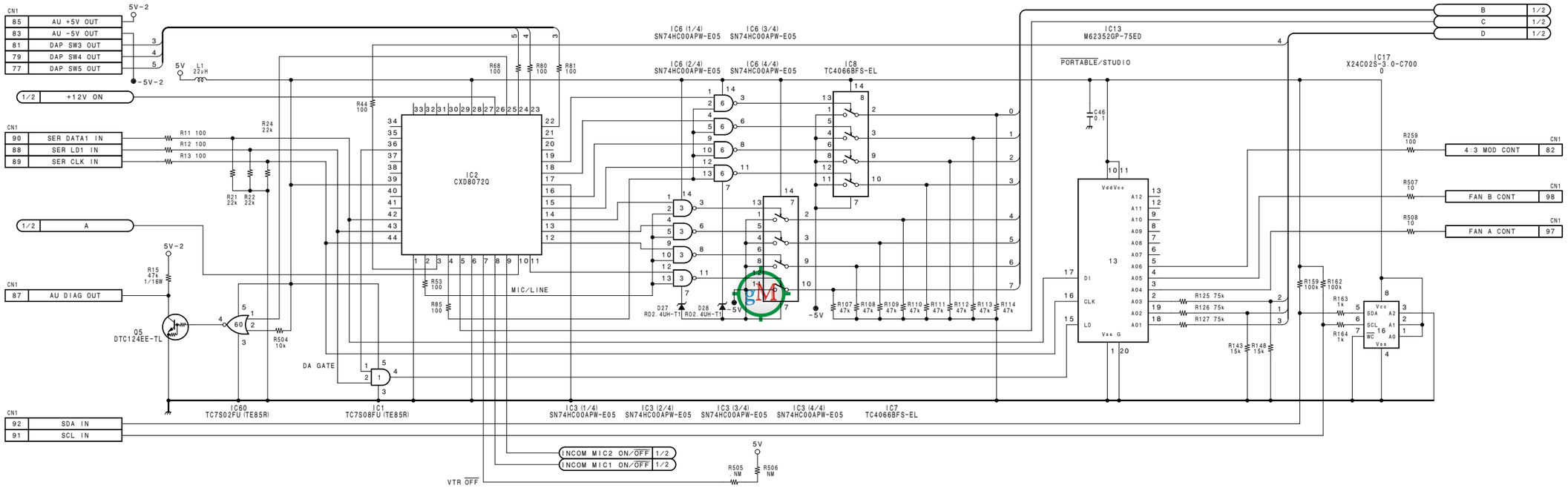

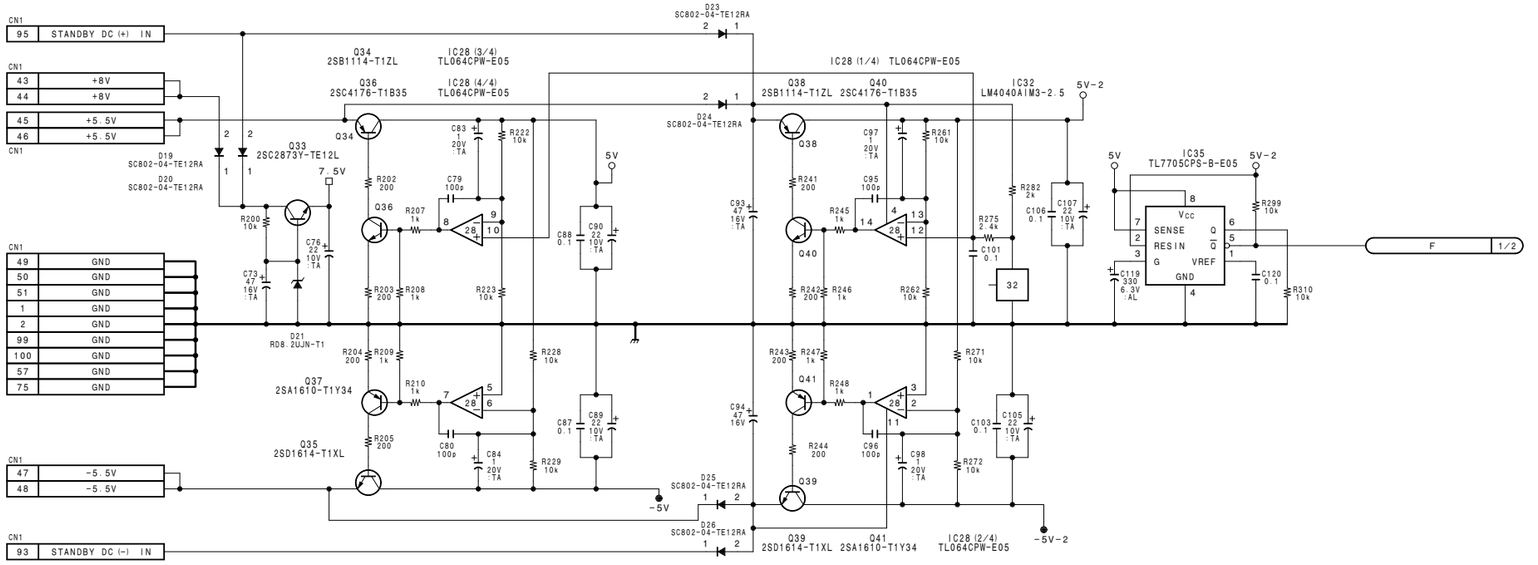

AU-203 (2/2)

BOARD NO. 1-660-244-11/12/13
LOT NO. 511-
B-¥HDCA750-AU203-12

HDC-700
HDCA-750

1

2

3

4

5

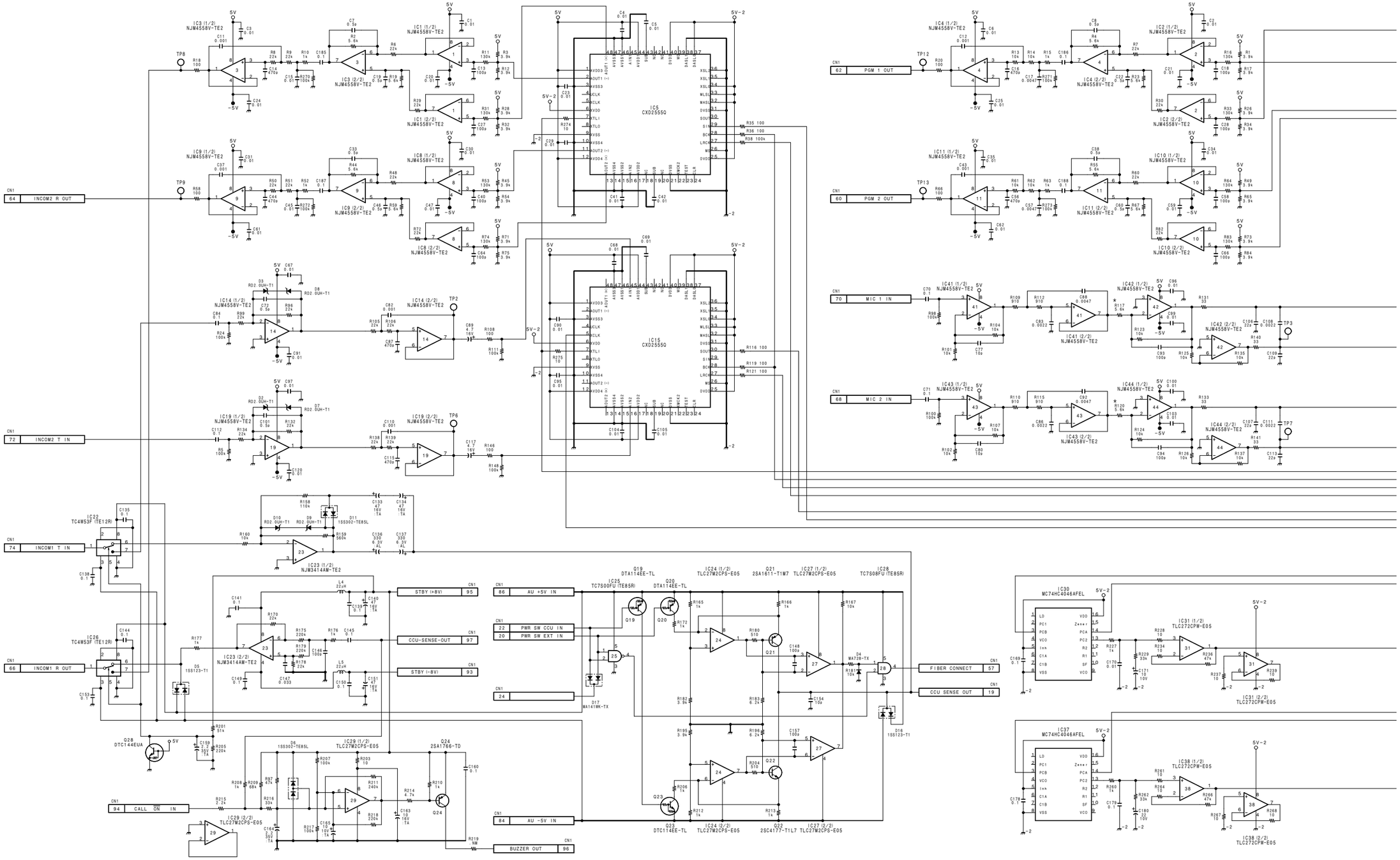

A B C D E F G H

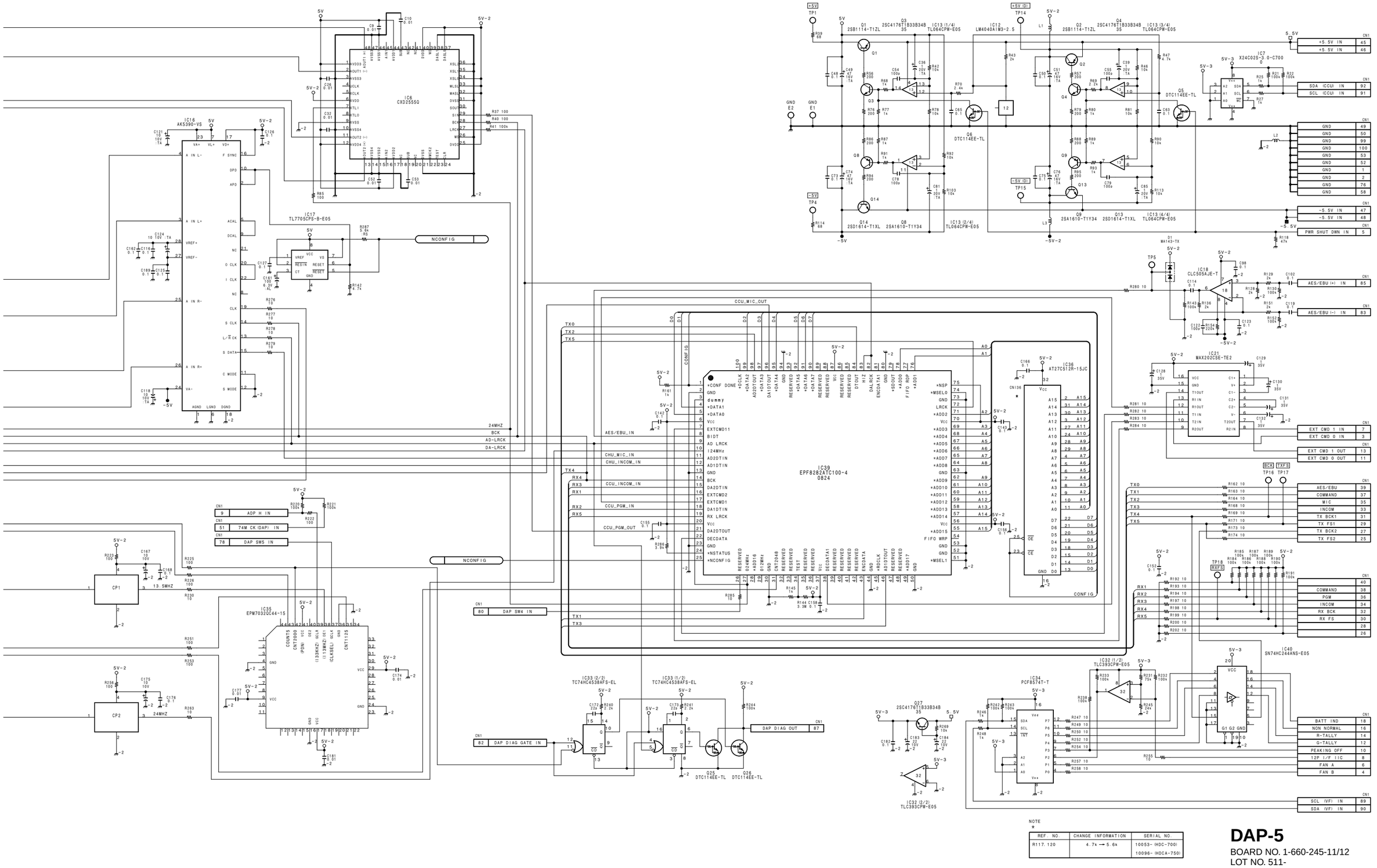

NOTE
*

REF. NO.	CHANGE INFORMATION	SERIAL NO.
R117, 120	4.7k → 5.6k	10053- (HDC-700) 10096- (HDCA-750)

DAP-5

BOARD NO. 1-660-245-11/12
LOT NO. 511-
B-¥HDCA750-DAP5-12

HDC-700
HDCA-750

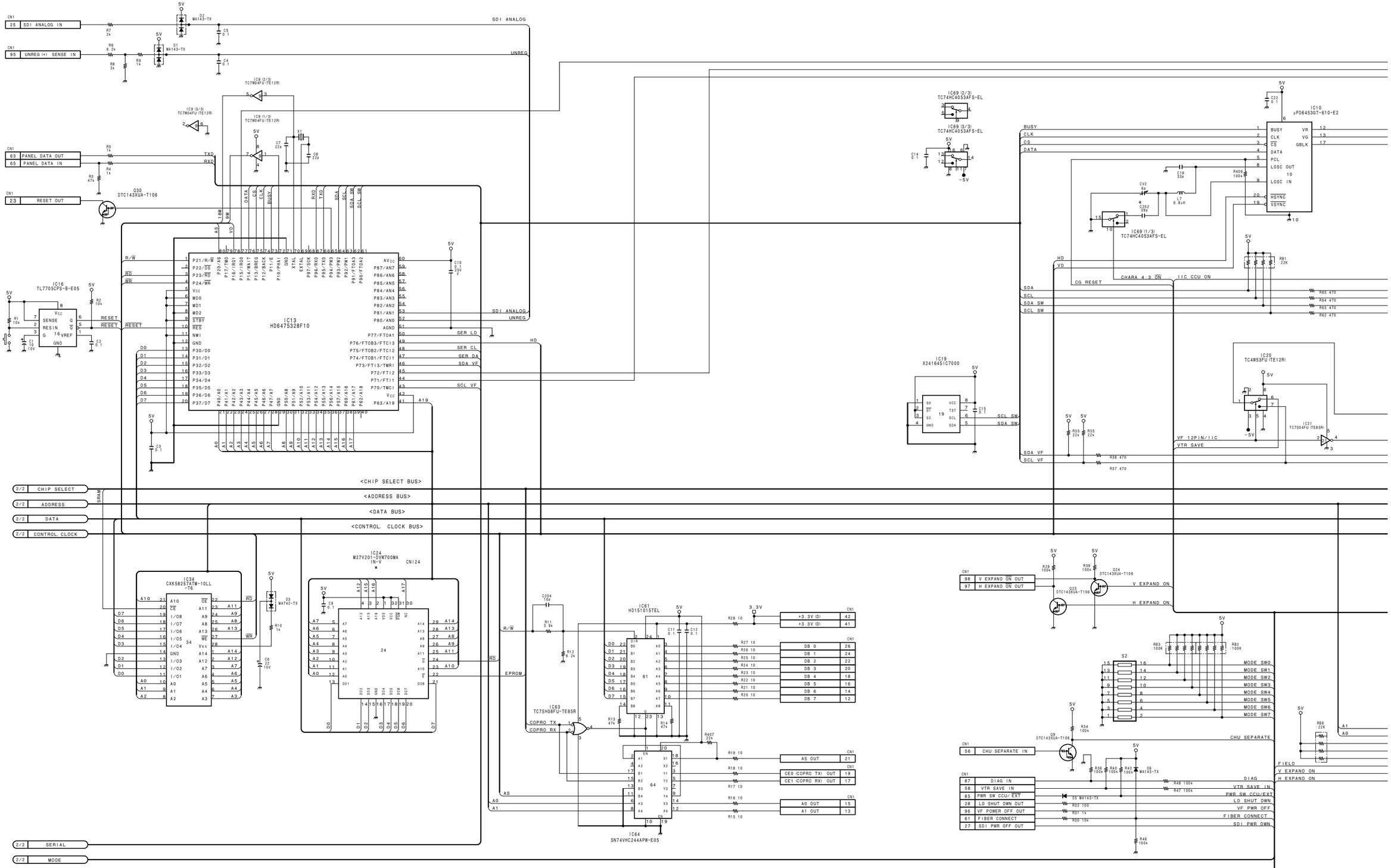

http://getMANUAL.com

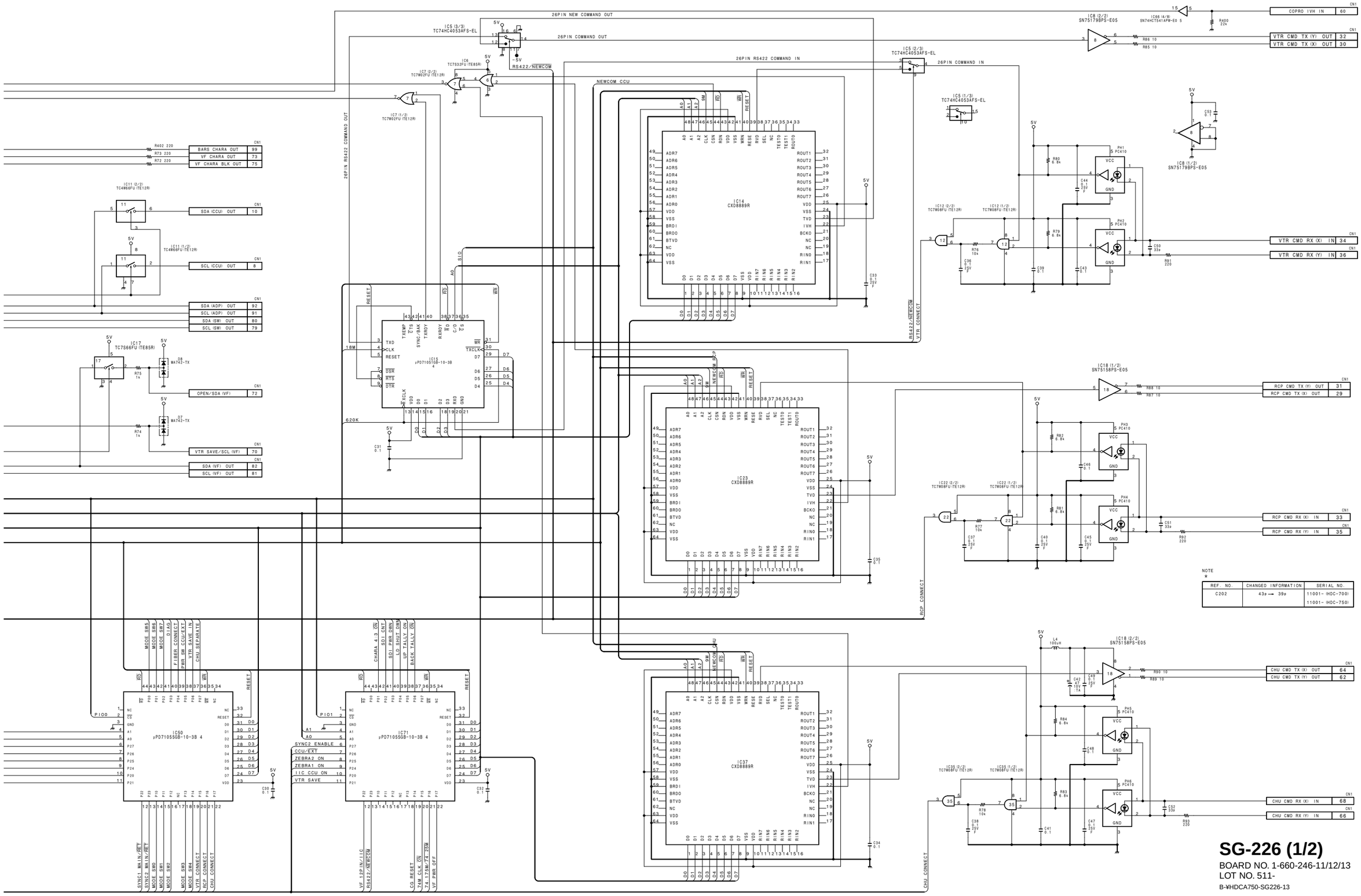

NOTE
*

REF. NO.	CHANGED INFORMATION	SERIAL NO.
C202	43p → 39p	11001- (HDC-700) 11001- (HDC-750)

SG-226 (1/2)

BOARD NO. 1-660-246-11/12/13
LOT NO. 511-
B-¥HDCA750-SG226-13

HDC-700
HDCA-750

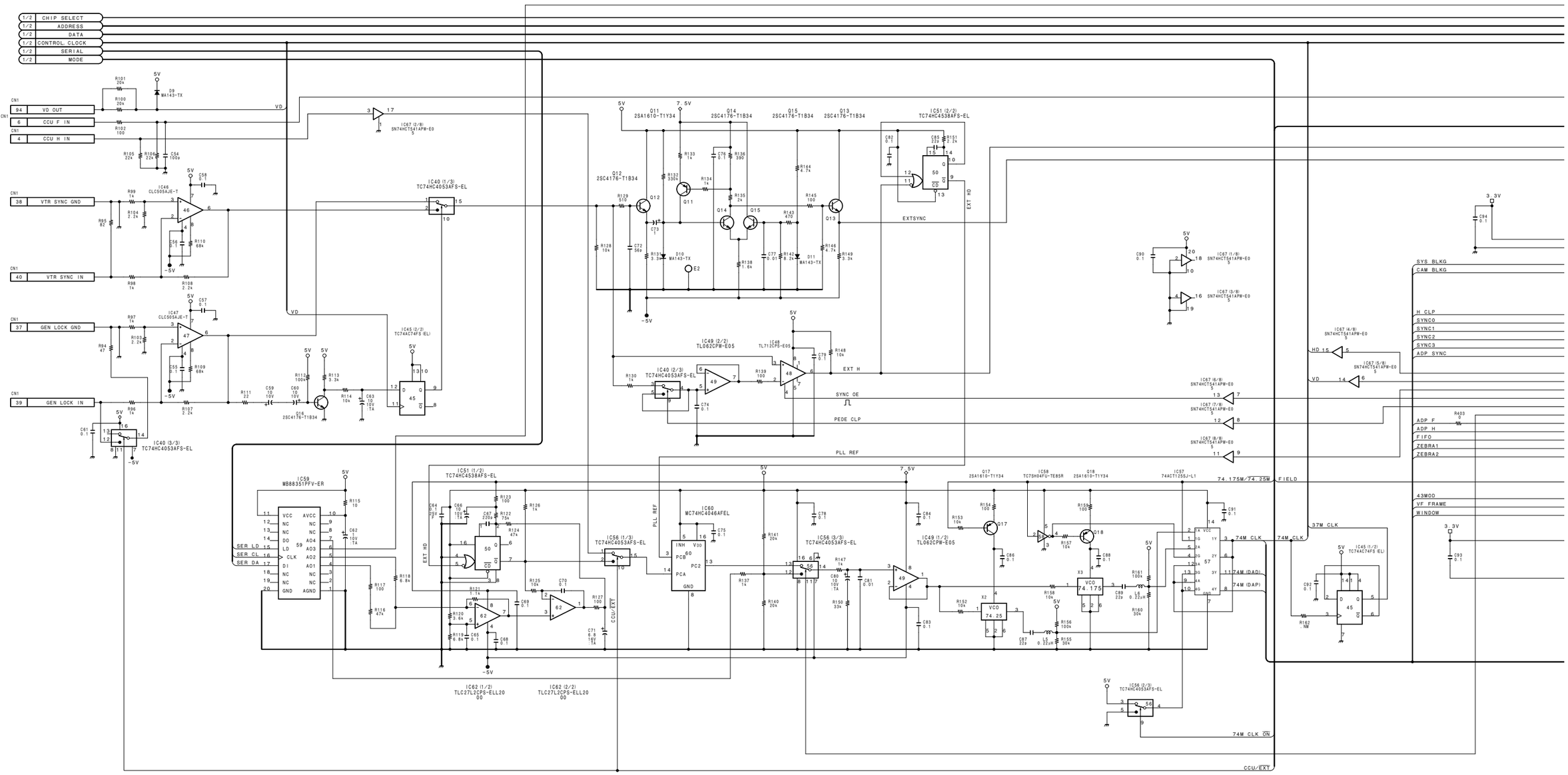

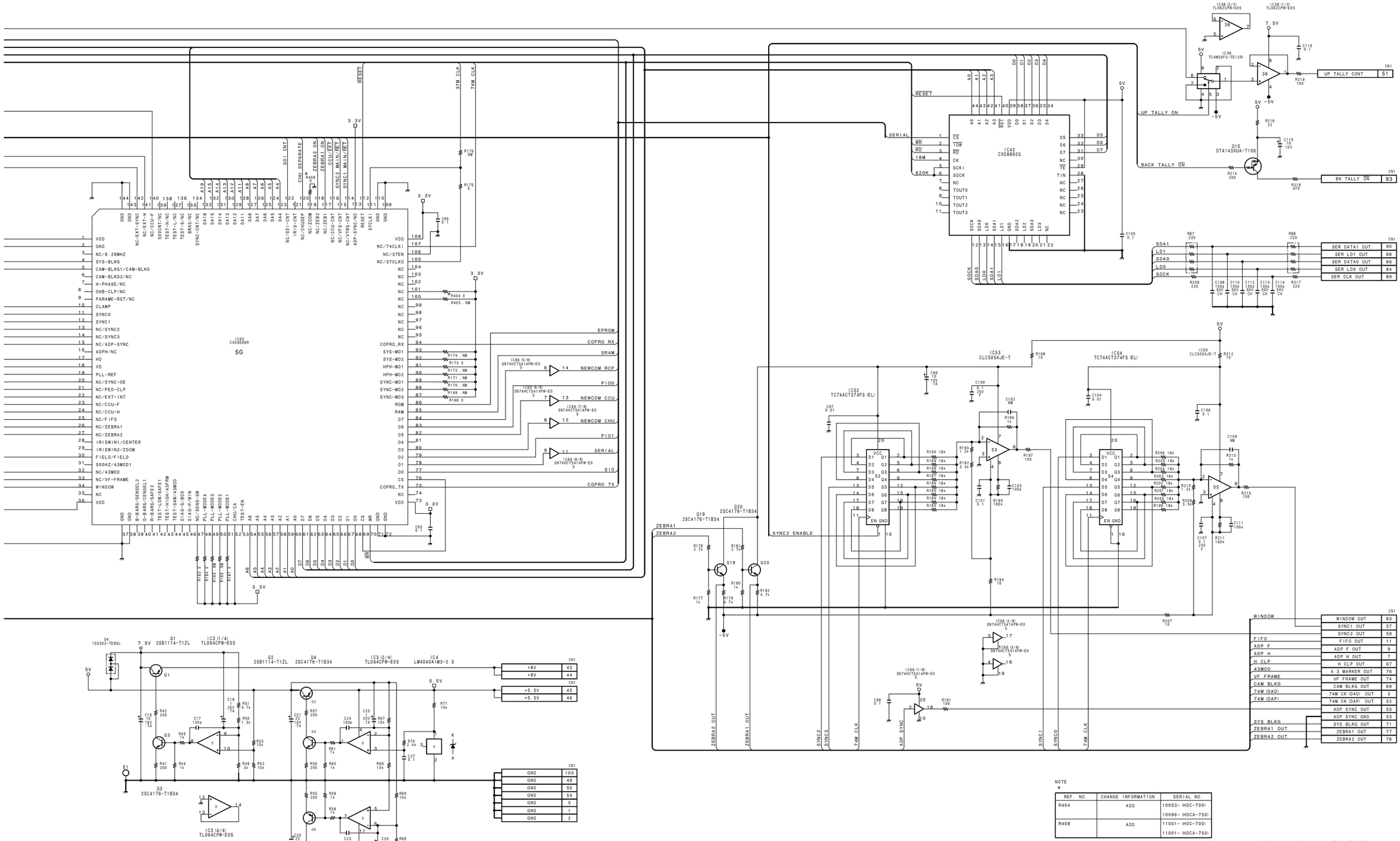

NOTE
*

REF. NO.	CHANGE INFORMATION	SERIAL NO.
R404	ADD	10053- (HDC-700)
		10096- (HDCA-750)
R408	ADD	11001- (HDC-700)
		11001- (HDCA-750)

SG-226 (2/2)

BOARD NO. 1-660-246-11/12/13
LOT NO. 511-
B-ΨHDCA750-SG226-13

HDC-700 : S/N 10001 through 10077
HDCA-750 : S/N 10001 through 10115

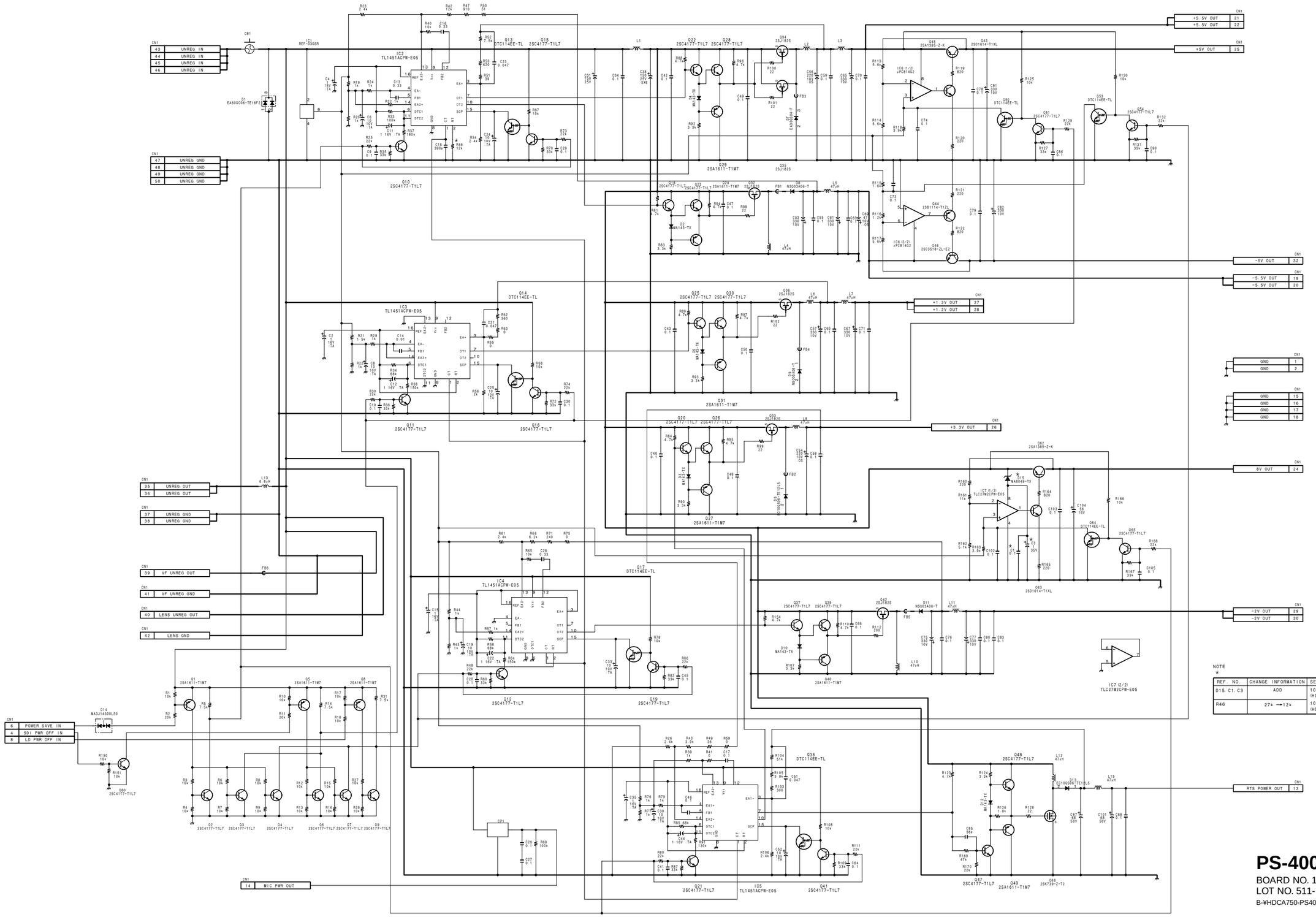

NOTE
★

REF. NO.	CHANGE INFORMATION	SERIAL NO.
D15. C1. C3	ADD	10053– (HDC-700)
R46	27k → 12k	10096– (HDCA-750)

PS-400

BOARD NO. 1-660-250-11/12/13
LOT NO. 511-
B-¥HDCA750-PS400-12

HDC-700 : S/N 10078 and Higher
HDCA-750 : S/N 10116 and Higher

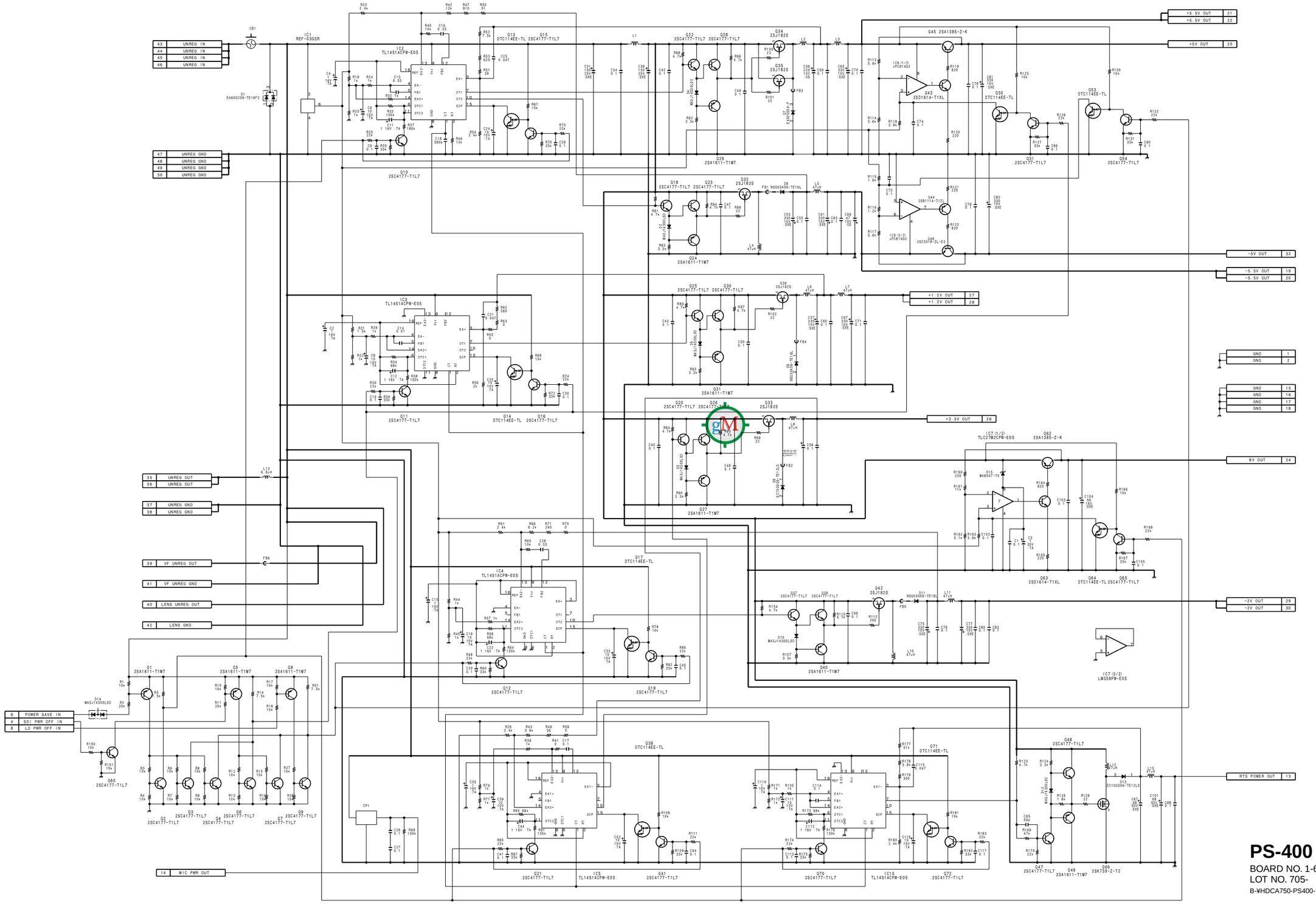

PS-400

BOARD NO. 1-660-250-14
LOT NO. 705-
B-¥HDCA750-PS400-14

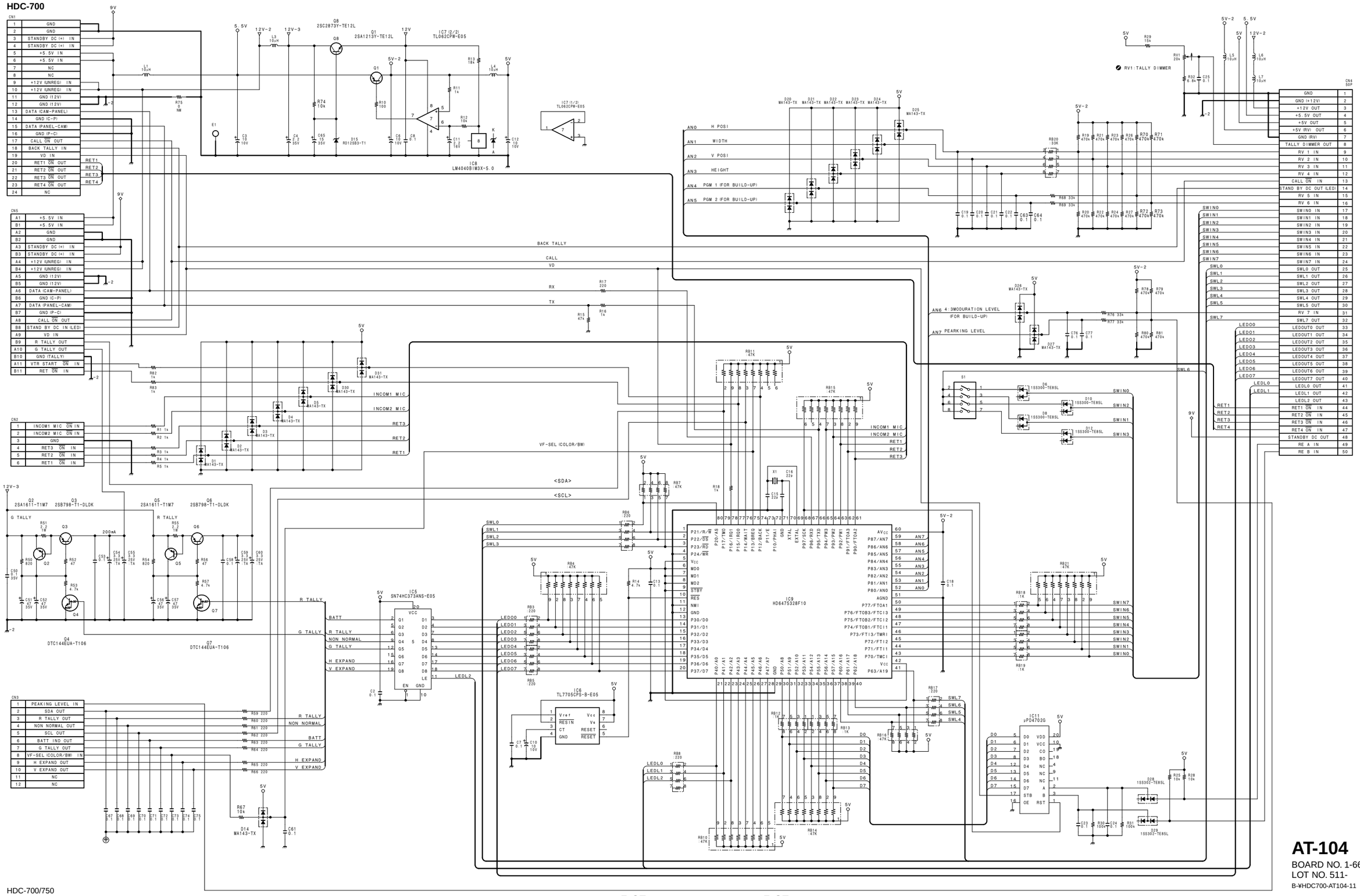

HDC-700/750
HDCA-750

5-37 5-37

AT-104
BOARD NO. 1-660-270-11
LOT NO. 511-
B-¥HDC700-AT104-11

HDC-700

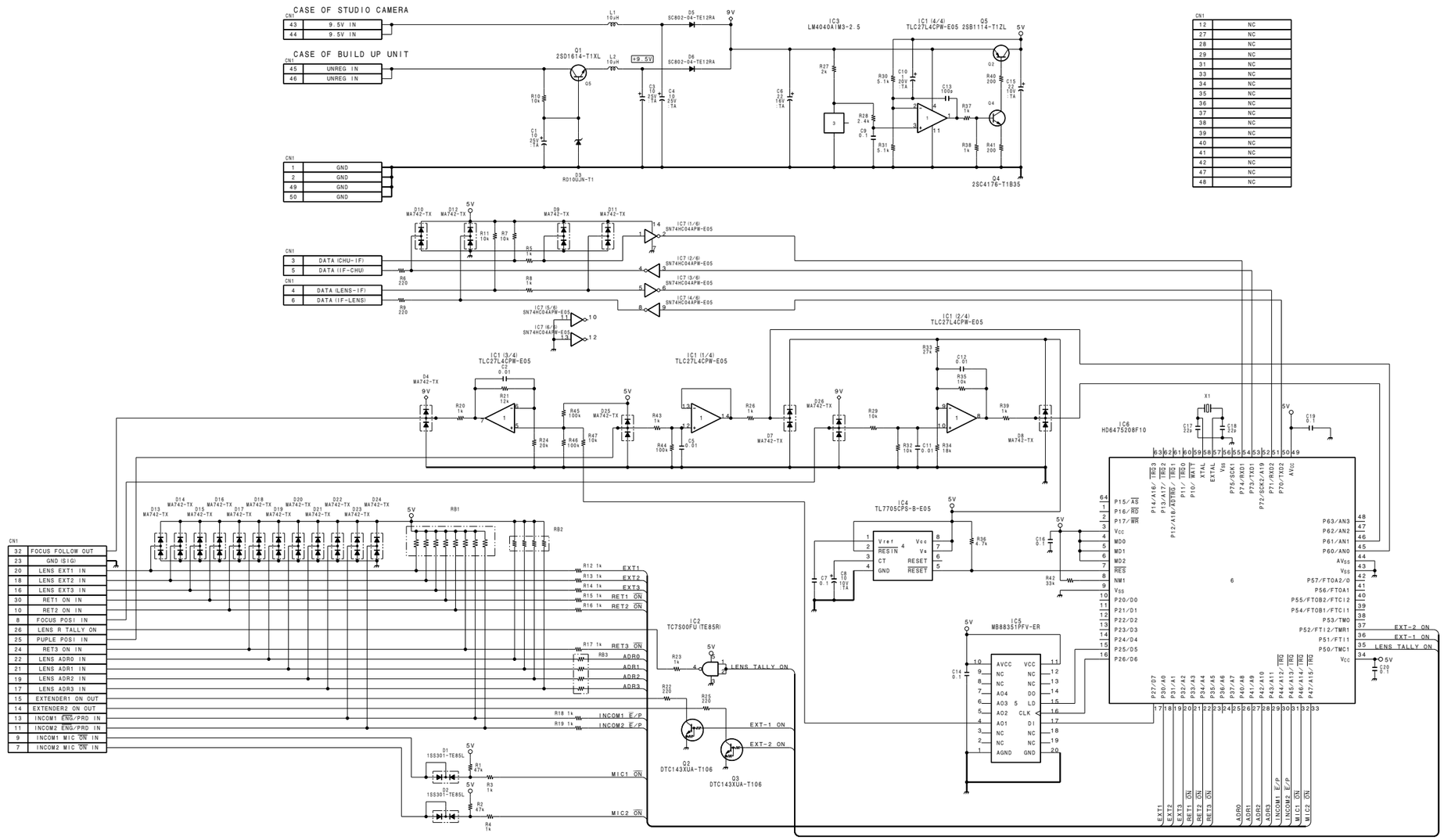

IF-568

BOARD NO. 1-660-268-11
LOT NO. 511-

B-¥HDC700-IF568-11

HDC-700

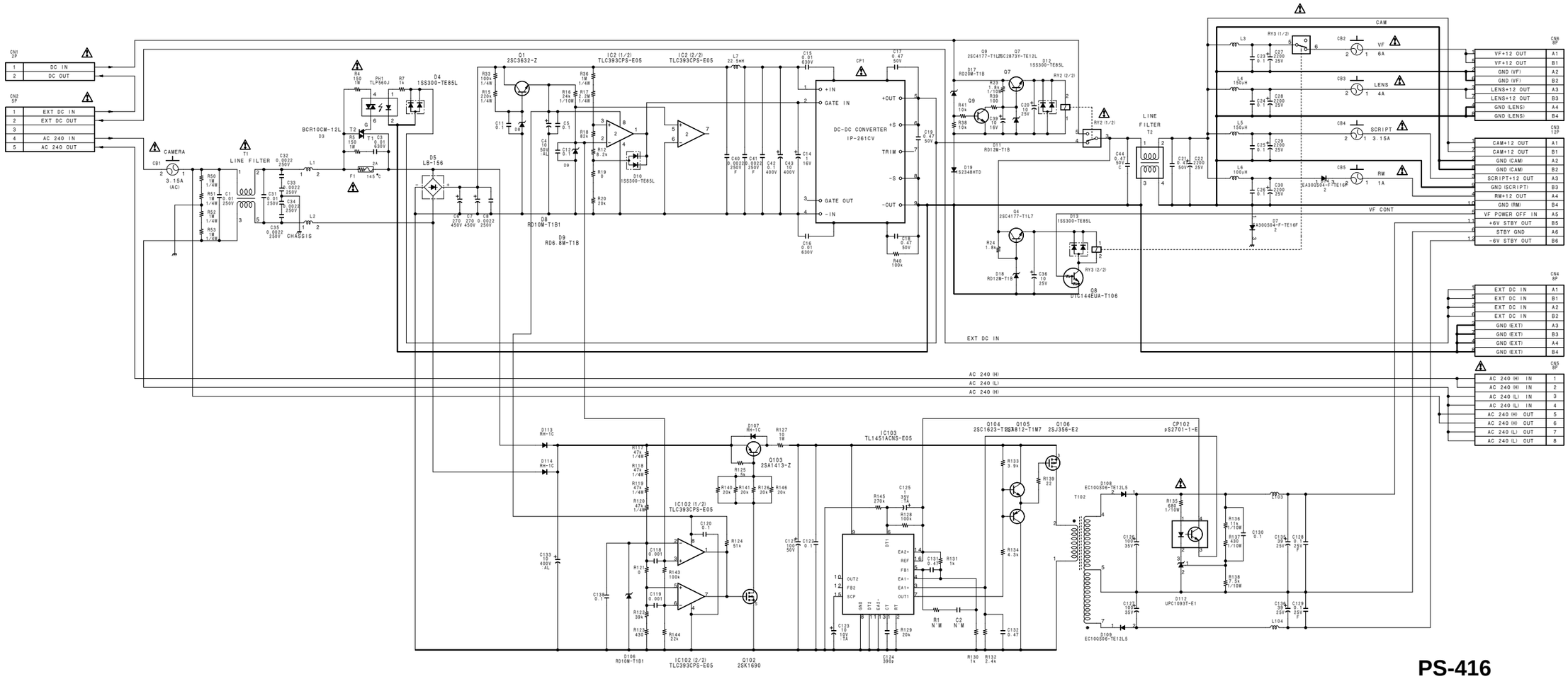

PS-416
BOARD NO. 1-660-269-11/12
LOT NO. 511-
B-¥HDC700-PS416-12

HDC-700

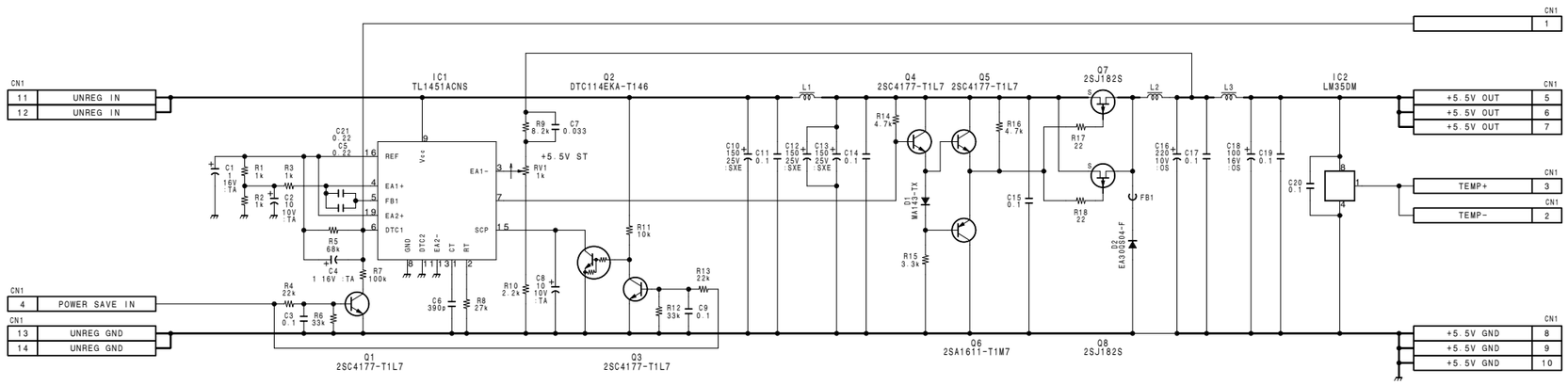

PS-445

BOARD NO. 1-660-260-11
LOT NO. 511-
B-¥HDC700-PS445-11

http://getMANUAL.com

HDC-700

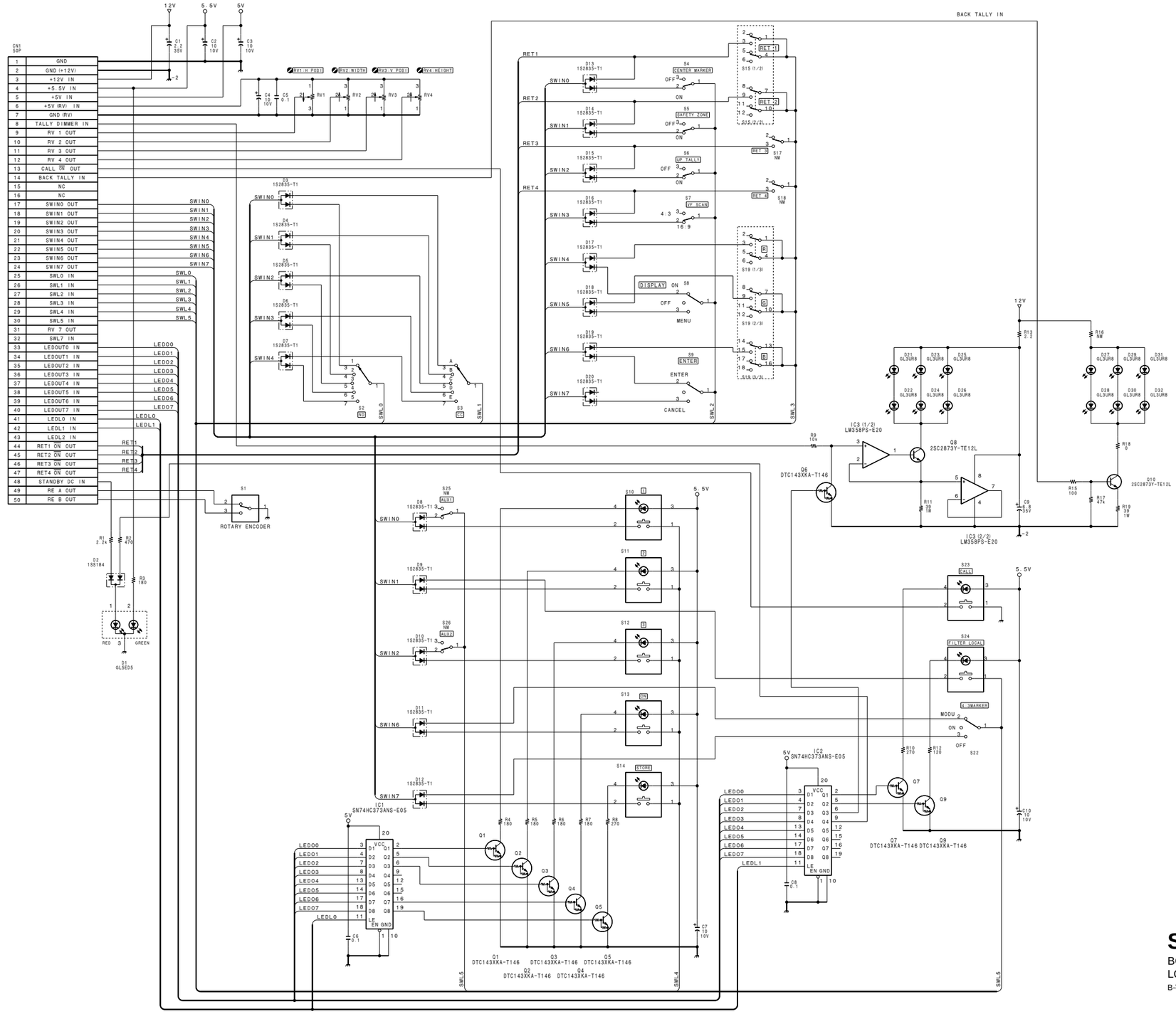

SW-824
BOARD NO. 1-660-272-11/12
LOT NO. 511-
B-¥HDC700-SW824-11

HDC-700

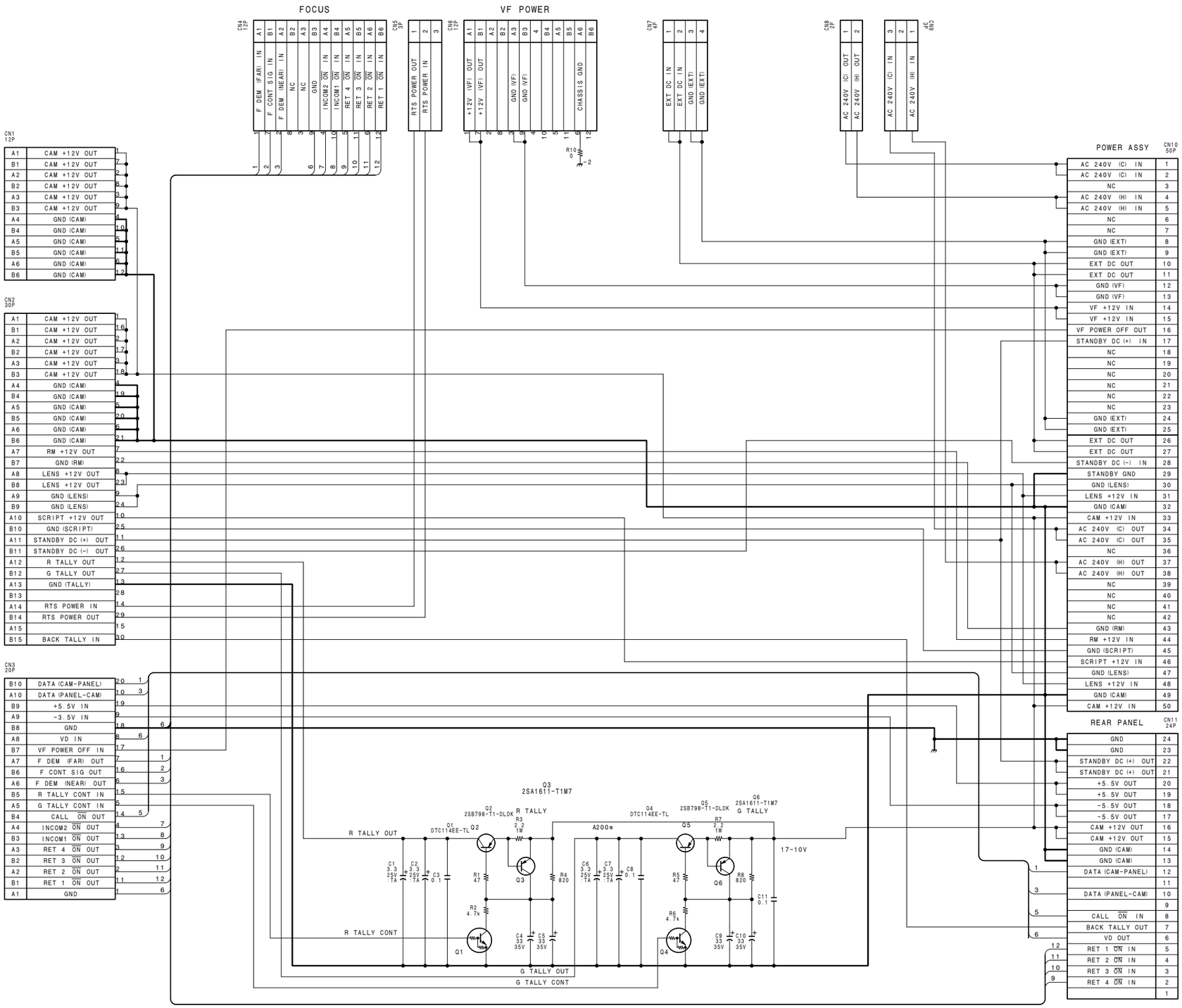

CN-1270
BOARD NO. 1-660-271-11
LOT NO. 511-
B-¥HDC700-CN1270-11

HDC-700

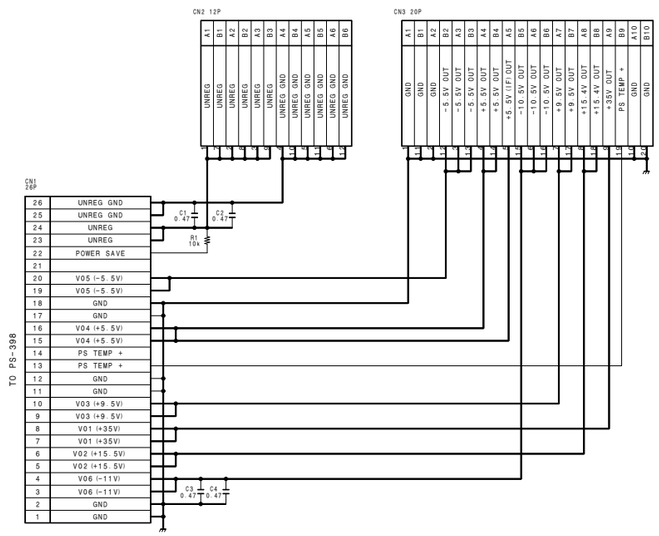

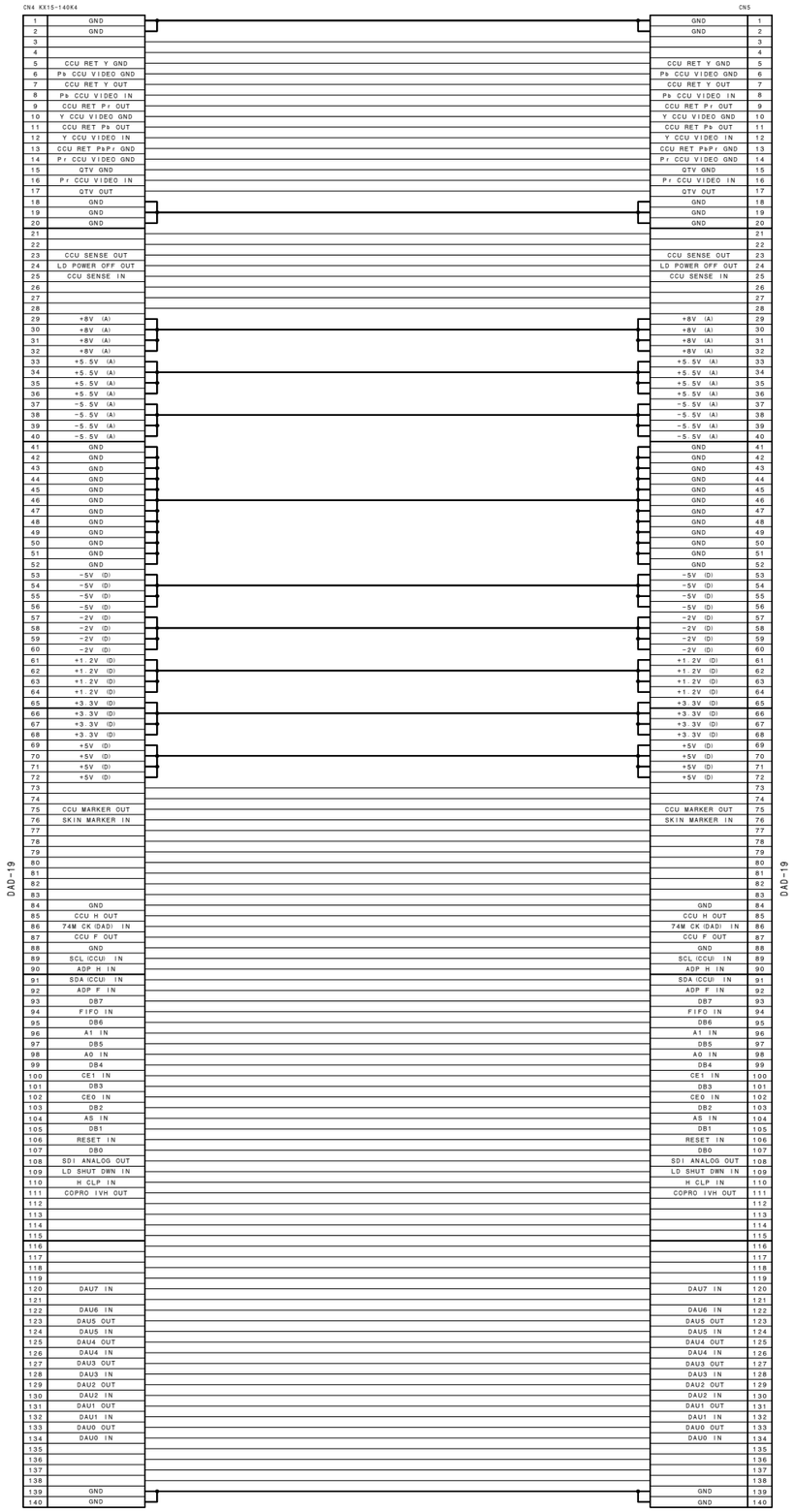

CN-1280
BOARD NO. 1-660-267-11/12
LOT NO. 511-
B-¥HDC700-CN1280-11

HDC-700

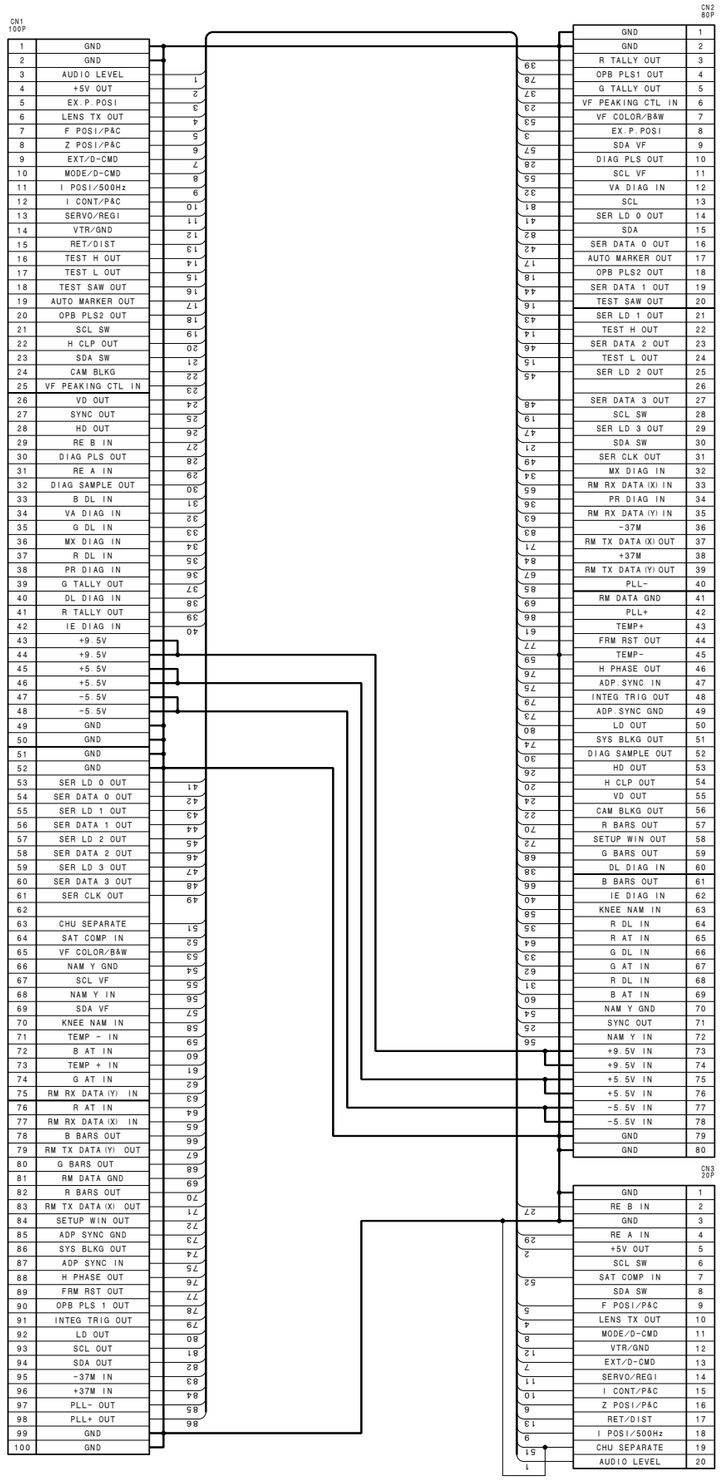

CN-1296

BOARD NO. 1-660-263-11/12
LOT NO. 511-
B-¥HDC700-CN1296-12

HDC-700

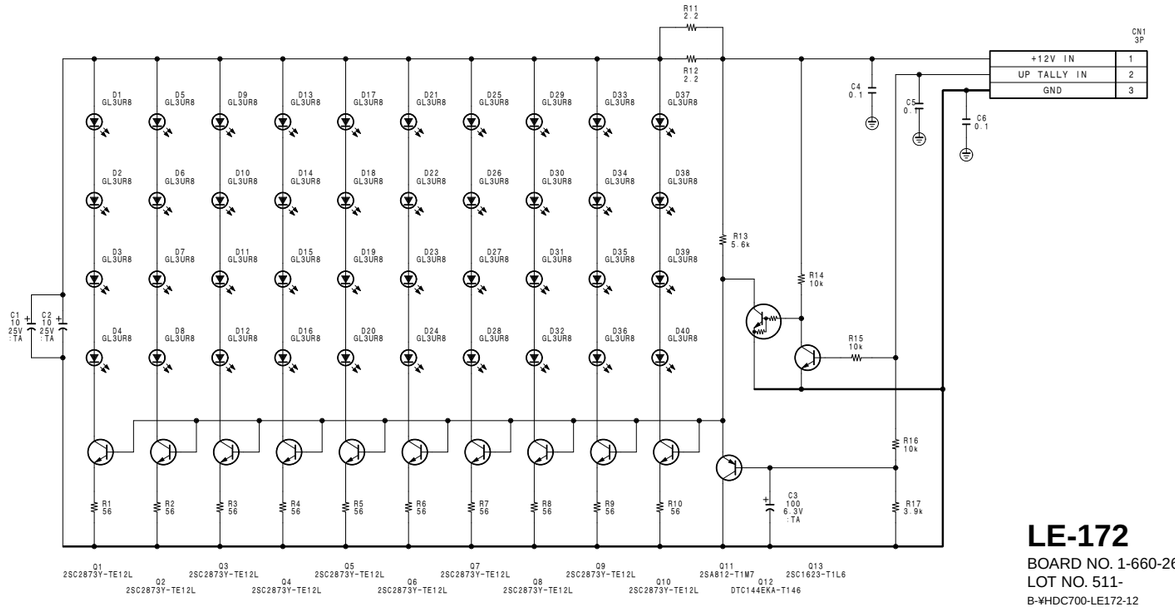

LE-172

BOARD NO. 1-660-261-11/12
LOT NO. 511-
B-¥HDC700-LE172-12

HDC-700

TO DR-264

VF

UP TALLY

LENS

TO VA-158

TO MX-59

TO PR-200

TO DL-65

TO IE-44

CN-1296

CN12 12P	
B6	CAM BLKG OUT
A6	GND
B5	VD OUT
A5	R-PA OUT
B4	R-PA GND
A4	G-PA OUT
B3	G-PA GND
A3	B-PA OUT
B2	B-PA GND
A2	GND
B1	GND
A1	GND

CN18 12P	
B6	FAN + OUT
A6	GND (FAN)
B5	
A5	
B4	
A4	
B3	
A3	
B2	
A2	CAM +12V OUT
B1	UP TALLY OUT
A1	GND (CAM)

CN19 30P	
A1	LENS R TALLY OUT
B1	LENS +12V OUT
A2	EXP POSI
B2	GND (LENS)
A3	RET3 ON IN
B3	GND (SIG)
A4	LENS ADR 0 IN
B4	LENS ADR 1 IN
A5	LENS EXT 1 IN
B5	LENS ADR 2 IN
A6	LENS EXT 2 IN
B6	LENS ADR 3 IN
A7	LENS EXT 3 IN
B7	EXT 1 ON OUT
A8	EXT 2 ON OUT
B8	IRIS POSI IN
A9	F DEM (FAR)
B9	ZOOM POSI IN
A10	INCOM 1 ENG / PRD IN
B10	RET1 ON IN
A11	INCOM2 ENG / PRD IN
B11	RET2 ON IN
A12	INCOM1 MIC ON IN
B12	FOCUS POSI IN
A13	INCOM2 MIC ON IN
B13	IRIS CONT OUT
A14	F CONT SIG OUT
B14	IRIS AUTO/MANU OUT
A15	F DEM (NEAR)
B15	SERVO/REGI OUT

CN1 50P TO VA-158			
50	GND	1	
49	GND		
48	-5.5V	2	
47	-5.5V		
46	+5.5V	3	
45	+5.5V		
44	+9.5V	4	
43	+9.5V		
42	SDA IN	7	
41	SCL IN	1	
40	SER DATA0 IN	12	
39	SER CLK IN	2	
38	SER LD0 IN	6	
37	DIAG SAMPLE IN	4	
36	VD IN	5	
35	HD IN	10	
34	CAM BL IN	6	
33	H CLP IN	11	
32	VA DIAG OUT		
31	OPB PLS2 IN	7	
30	DIAG PLS IN	12	
29	TEST SAW IN	8	
28	TEST H IN	13	
27	TEST L IN	9	
26	CAM BLKG2 IN	1	
25			
24			
23			
22			
21			
20	R PA VIDEO IN	1	
19			
18	R PA VIDEO GND	2	
17	R VA VIDEO OUT	1	
16			
15	R VA VIDEO GND	2	
14	G PA VIDEO IN	3	
13			
12	G PA VIDEO GND	4	
11	G VA VIDEO OUT	3	
10			
9	G VA VIDEO GND	5	
8	B PA VIDEO IN	5	
7			
6	B PA VIDEO GND	6	
5	B VA VIDEO OUT	5	
4			
3	B VA VIDEO GND	6	
2	GND		
1	GND	1	

CN2 50P TO MX-59			
50	GND	1	
49	GND		
48	-5.5V	2	
47	-5.5V		
46	+5.5V	3	
45	+5.5V		
44	+9.5V	4	
43	+9.5V		
42	SDA IN	7	
41	SCL IN	1	
40	SER DATA1 IN	11	
39	SER CLK IN	2	
38	SER LD1 IN	5	
37	DIAG SAMPLE IN	4	
36	VD IN	5	
35	HD IN	10	
34	CAM BL IN	6	
33	H CLP IN	11	
32	MX DIAG OUT		
31	SETUP WIN IN	3	
30			
29	SAT COMP OUT		
28			
27	M PED EXT IN		
26			
25	IRIS NAM Y OUT		
24			
23	KNEE APT OUT		
22			
21			
20	R VA VIDEO IN	1	
19			
18	R VA VIDEO GND	2	
17	R MX VIDEO OUT	1	
16			
15	R MX VIDEO GND	2	
14	G VA VIDEO IN	3	
13			
12	G VA VIDEO GND	4	
11	G MX VIDEO OUT	3	
10			
9	G MX VIDEO GND	5	
8	B VA VIDEO IN	5	
7			
6	B VA VIDEO GND	6	
5	B MX VIDEO OUT	5	
4			
3	B MX VIDEO GND	6	
2	GND		
1	GND		

CN3 50P TO PR-200			
50	GND	1	
49	GND		
48	-5.5V	2	
47	-5.5V		
46	+5.5V	3	
45	+5.5V		
44	+9.5V	4	
43	+9.5V		
42	SDA IN	7	
41	SCL IN	1	
40	SER DATA2 IN	10	
39	SER CLK IN	2	
38	SER LD2 IN	4	
37	DIAG SAMPLE IN	4	
36	VD IN	5	
35	HD IN	10	
34	CAM BL IN	6	
33	H CLP IN	11	
32	PR DIAG OUT		
31			
30			
29	KNEE NAM SIG OUT		
28			
27			
26			
25			
24			
23	KNEE APT IN		
22			
21			
20	R MX VIDEO IN	1	
19			
18	R MX VIDEO GND	2	
17	R PR VIDEO OUT	1	
16			
15	R PR VIDEO GND	2	
14	G MX VIDEO IN	3	
13			
12	G MX VIDEO GND	4	
11	G PR VIDEO OUT	3	
10			
9	G PR VIDEO GND	5	
8	B MX VIDEO IN	5	
7			
6	B MX VIDEO GND	6	
5	B PR VIDEO OUT	5	
4			
3	B PR VIDEO GND	6	
2	GND		
1	GND		

CN4 50P TO DL-65			
50	GND	1	
49	GND		
48	-5.5V	2	
47	-5.5V		
46	+5.5V	3	
45	+5.5V		
44	+9.5V	4	
43	+9.5V		
42	SDA IN	7	
41	SCL IN	1	
40	SER DATA3 IN	9	
39	SER CLK IN	2	
38	SER LD3 IN	3	
37	DIAG SAMPLE IN	4	
36	SKIN MARKER OUT		
35	SKIN GATE DL OUT		
34	CAM BL IN	6	
33	-37M IN	2	
32	-37M IN	1	
31	OH VIDEO GND	1	
30	H CLP IN	11	
29	R OH VIDEO OUT	2	
28	R DL VIDEO OUT		
27	G OH VIDEO OUT	3	
26	G DL VIDEO OUT		
25	G 2H VIDEO OUT	4	
24	B DL VIDEO OUT		
23	B 1H VIDEO OUT	5	
22	DL 1H/2H GND		
21	OH / 2H GND		
20	R PR VIDEO IN	1	
19	DL DIAG OUT		
18	R PR VIDEO GND	2	
17	R 1H VIDEO OUT	1	
16			
15	R 1H VIDEO GND	2	
14	G PR VIDEO IN	3	
13			
12	G PR VIDEO GND	4	
11	G 1H VIDEO OUT	3	
10			
9	G 1H VIDEO GND	5	
8	B PR VIDEO IN	5	
7			
6	B PR VIDEO GND	6	
5	B 1H VIDEO OUT	5	
4	BARS ON		
3	B 1H VIDEO GND	6	
2	GND		
1	GND		

CN5 100P TO IE-44				
3	GND	100	99	GND
	SETUP WIN IN	98	97	
2		96	95	
1	SYS BLK IN	94	93	
	R BARS IN	92	91	
	G BARS IN	90	89	
	B BARS IN	88	87	
		86	85	
4	R AT OUT	84	83	
5	G AT OUT	82	81	
6	B AT OUT	80	79	
		78	77	
14	SYNC IN	76	75	
		74	73	
		72	71	
	SKIN GATE DL IN	70	69	
		68	67	
	FAN A OFF	66	65	FAN A CONT OUT
	FAN B	64	63	FAN B CONT OUT
		62	61	
		60	59	
		58	57	
		56	55	
	VF DTL OUT	54	53	
	GND	52	51	GND
	GND	50	49	GND
2	-5.5V	48	47	+5.5V
3	+5.5V	46	45	+5.5V
4	+9.5V	44	43	+9.5V
7	SDA IN	42	41	SCL IN
9	SER DATA3 IN	40	39	SER CLK IN
5	SER LD3 IN	38	37	DIAG SAMPLE IN
6	VD IN	36	35	HD IN
	CAM BL IN	34	33	H CLP IN
	IE DIAG OUT	32	31	OH VIDEO GND
		30	29	R OH VIDEO IN
		28	27	G OH VIDEO IN
		26	25	G 2H VIDEO IN
		24	23	B OH VIDEO IN
		22	21	OH VIDEO GND
1	R 1H VIDEO IN	20	19	
2	R 1H VIDEO GND	18	17	R CHU VIDEO OUT
		16	15	R CHU VIDEO GND
3	G 1H VIDEO IN	14	13	
4	G 1H VIDEO GND	12	11	G CHU VIDEO OUT
		10	9	G CHU VIDEO GND
5	B 1H VIDEO IN	8	7	
6	B 1H VIDEO GND	6	5	B CHU VIDEO OUT
	BARS ON	4	3	B CHU VIDEO GND
	GND	2	1	GND

CN6 100P CN-1296				
1	GND	100	99	GND
4	PLL+ OUT	98	97	PLL- OUT
2	+37M IN	96	95	-37M IN
7	SDA OUT	94	93	SCL OUT
8	LD OUT	92	91	INTEG TRIG OUT
1	CAM BLKG2 OUT	90	89	FRM RST OUT
6	H PHASE OUT	88	87	ADP SYNC IN
	SYS BLKG OUT	86	85	ADP SYNC GND
3	SETUP WIN OUT	84	83	RM TX DATA (X) OUT
1	R BARS OUT	82	81	RM DATA GND
2	G BARS OUT	80	79	RM TX DATA (Y) OUT
3	B BARS OUT	78	77	RM RX DATA (X) IN
4	R AT IN	76	75	RM RX DATA (Y) IN
5	G AT IN	74	73	TEMP + IN
6	B AT IN	72	71	TEMP - IN
1	KNEE NAM IN	70	69	SDA VF
2	NAM Y IN	68	67	SCL VF
3	DL VIDEO GND	66	65	VF COLOR/BAW
	SAT COMP IN	64	63	CHU SEPARATE
		62	61	SER CLK OUT
9	SER DATA 3 OUT	60	59	SER LD 3 OUT
10	SER DATA 2 OUT	58	57	SER LD 2 OUT
11	SER DATA 1 OUT	56	55	SER LD 1 OUT
12	SER DATA 0 OUT	54	53	SER LD 0 OUT
	GND	52	51	GND
2	GND	50	49	GND
10	-5.5V	48	47	-5.5V
4	+5.5V	46	45	+5.5V
	+9.5V	44	43	+9.5V
	IE DIAG IN	42	41	R TALLY OUT
	DL DIAG IN	40	39	G TALLY OUT
	PR DIAG IN	38	37	R DL IN
	MX DIAG IN	36	35	G DL IN
	VA DIAG IN	34	33	B DL IN
	DIAG SAMPLE OUT	32	31	RE A IN
	DIAG PLS OUT	30	29	RE B IN
	HD OUT	28	27	SYNC OUT
	VD OUT	26	25	VF PEAKING CTL IN
	CAM BLKG	24	23	SDA SW
	H CLP OUT	22	21	SCL SW
	OPB PLS2 OUT	20	19	AUTO MARKER OUT
	TEST SAW OUT	18	17	TEST L OUT
	TEST H OUT	16	15	RET/DIST
	VTR/GND	14	13	SERVO/REGI
	I CONT/P&C	12	11	I POSI/500Hz
	MODE/D-CMD	10	9	EXT/D-CMD
	Z POSI/P&C	8	7	DATA (IF-CHU)
	DATA (CHU-IF)	6	5	EX.P POSI
	+5V OUT	4	3	AUDIO LEVEL
	GND	2	1	GND

CN20 50P		
50	GND	
49	GND	
48		
47	UNREG IN	
46	UNREG IN	
45	+9.5V IN	
44	+9.5V IN	
43		
42		
41		
40		
39		
38		
37		
36		
35		
34		
33		
32	FOCUS FOLLOW OUT	
31		
30	RET/DIST	
29		
28		
27		
26	LENS R TALLY OUT	
25	EX.P POSI IN	
24	RET3 ON IN	
23	GND (E/D)	
22	LENS ADR 0 IN	
21	LENS ADR 1 IN	
20	LENS EXT 1 IN	
19	LENS ADR 2 IN	
18	LENS EXT 2 IN	
17	LENS ADR 3 IN	
16	LENS EXT 3 IN	
15	EXT 1 ON OUT	
14	EXT 2 ON OUT	
13	INCOM1 ENG / PRD IN	
12		
11	INCOM2 ENG / PRD IN	
10	RET2 ON IN	
9	INCOM1 MIC ON IN	
8	FOCUS POSI IN	
7	INCOM2 MIC ON IN	
6	DATA (IF-LENS)	
5	DATA (LENS-IF)	
4	DATA (CHU-IF)	
3	GND	
2	GND	
1	GND	

CN21 3P	
3	FAN B
2	FAN B GND
1	

Q1 2SB1114-T1ZL
Q3 DTC114EE-TL
Q4 DTC114EE-TL
IC1 LM4040AIM3-2.5
Q5 2SB1114-T1ZL
Q2 2SC4177-T1L7
IC2 (1/2) LM358PW-E05
IC2 (2/2) LM358PW-E05
Q6 2SC4177-T1L7
IC5 (1/2) LM358PW-E05
IC5 (2/2) LM358PW-E05
IC8 LM4040AIM3-2.5
Q7 2SB1114-T1ZL
D4 MA8047-TX
BZ1

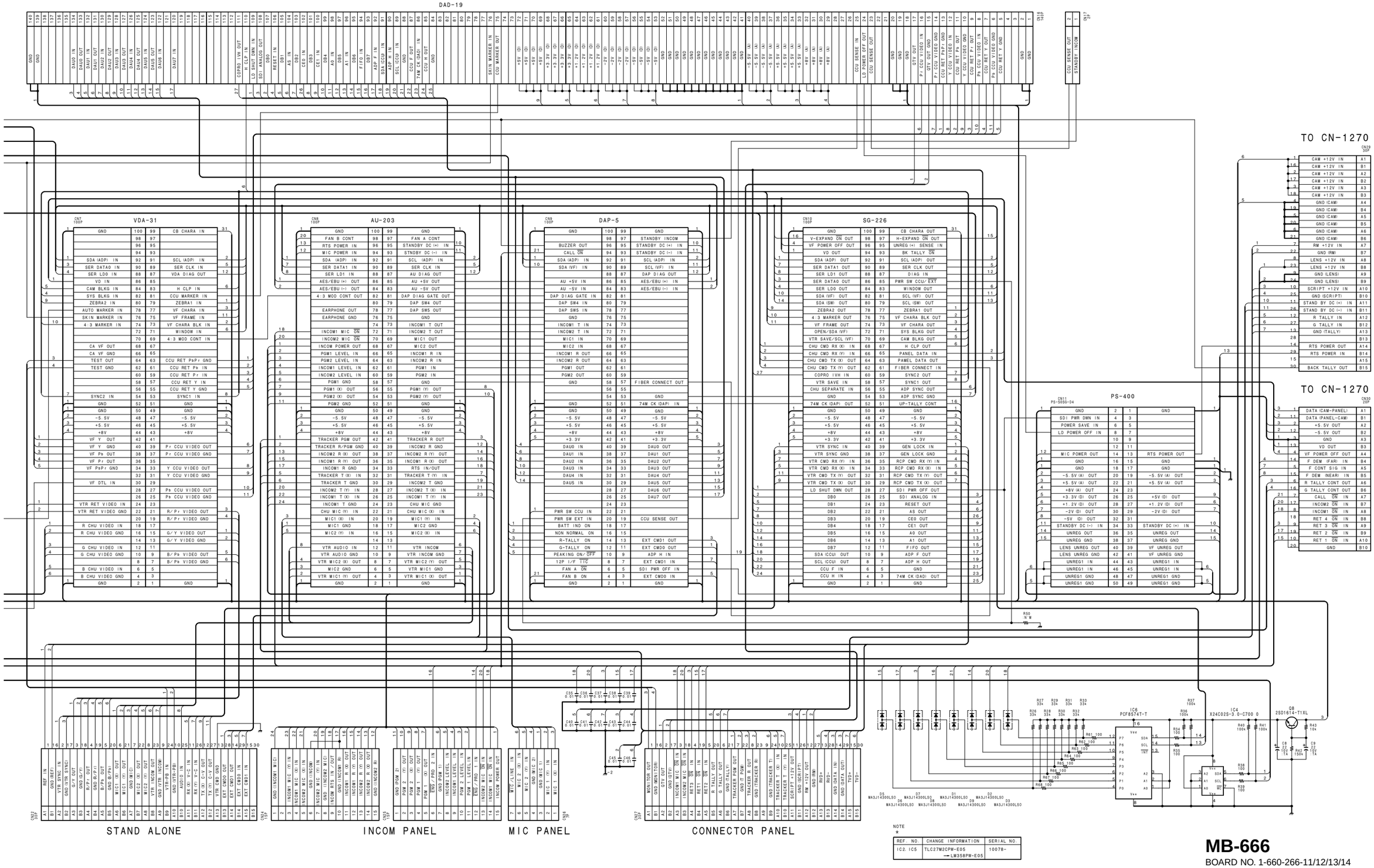

NOTE
*

REF. NO.	CHANGE INFORMATION	SERIAL NO.
IC2. IC5	TLC27M2CPW-E05 → LM358PW-E05	10078-

HDC-700/750
HDCA-750

HDC-700

CCD BLOCK
CN-1239
IF-569
IF-568
VA-158
MX-59
PR-200
DL-65
IE-44
CN-1296
VDA-31
AU-203
DAP-5
SG-226
PS-400
MB-666
CONNECTOR PANEL
CONNECTOR PANEL ASSY
CN-988
CN-989
CN-990
SW-706
LE-172
LENS (FEMALE) -EXT VIEW-
HARNESS (LENS)
HARNESS (UP TALLY)
HARNESS (VTR)
HARNESS (INCOM XLR)
HARNESS (VF)
TRUNK LINE
CN110
CN109 VTR
CN104 INTERCOM 1 (FEMALE) (XLR) -EXT VIEW-
CN105 INTERCOM 2 (FEMALE) (XLR) -EXT VIEW-
RET CONTROL (FEMALE) -EXT VIEW-
TRACKER (FEMALE) -EXT VIEW-
SCRIPT (FEMALE) -EXT VIEW-
REMOTE (FEMALE) -EXT VIEW-
MONITOR OUT (BNC)
PROMPTER OUT (BNC)
FAN1
FAN2

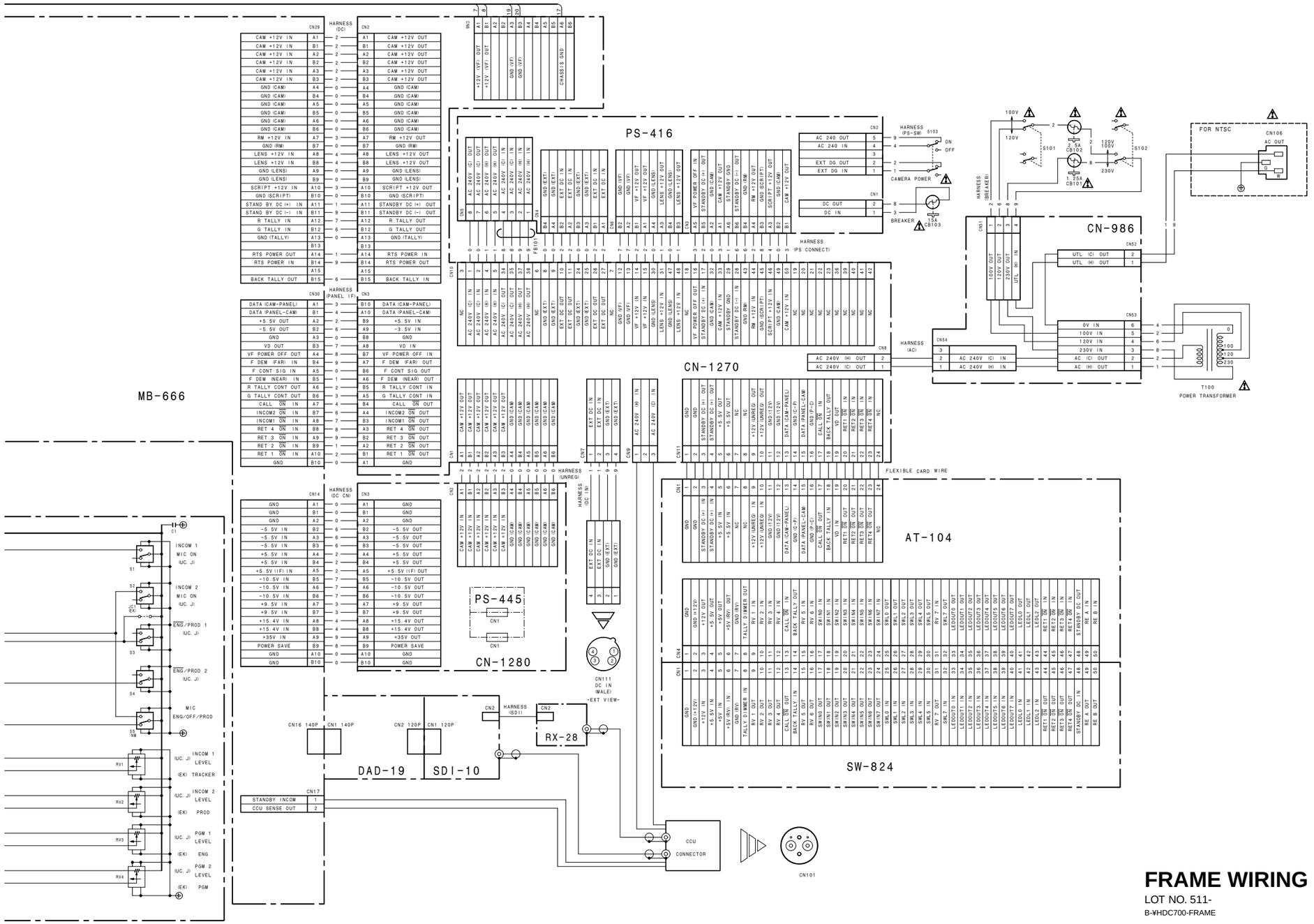

FRAME WIRING

LOT NO. 511-

B-¥HDC700-FRAME

http://getMANUAL.com

HDC-750

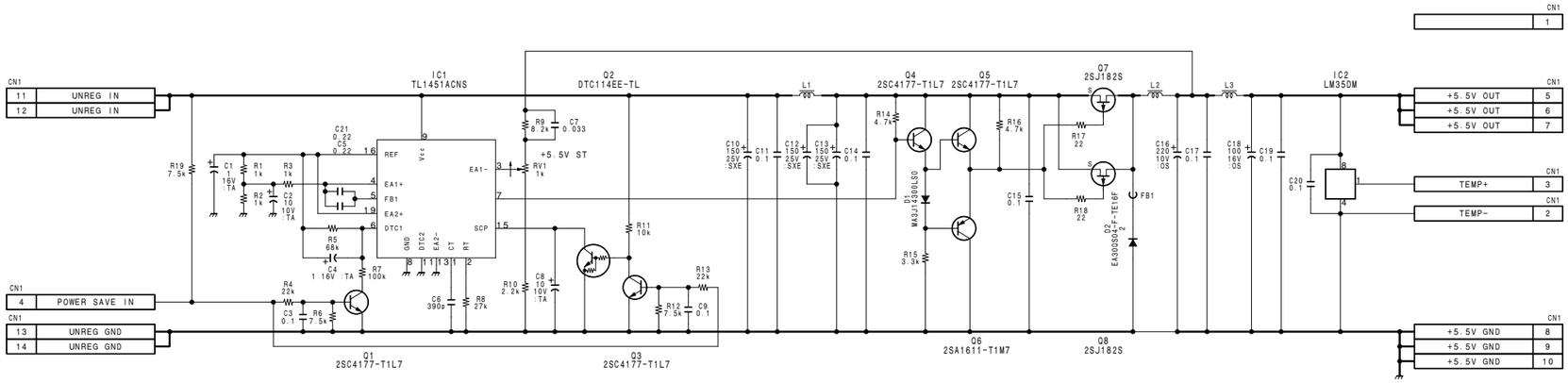

PS-419

BOARD NO. 1-660-242-11/12
LOT NO. 511-
B-¥HDC750-PS419-12

HDC-750

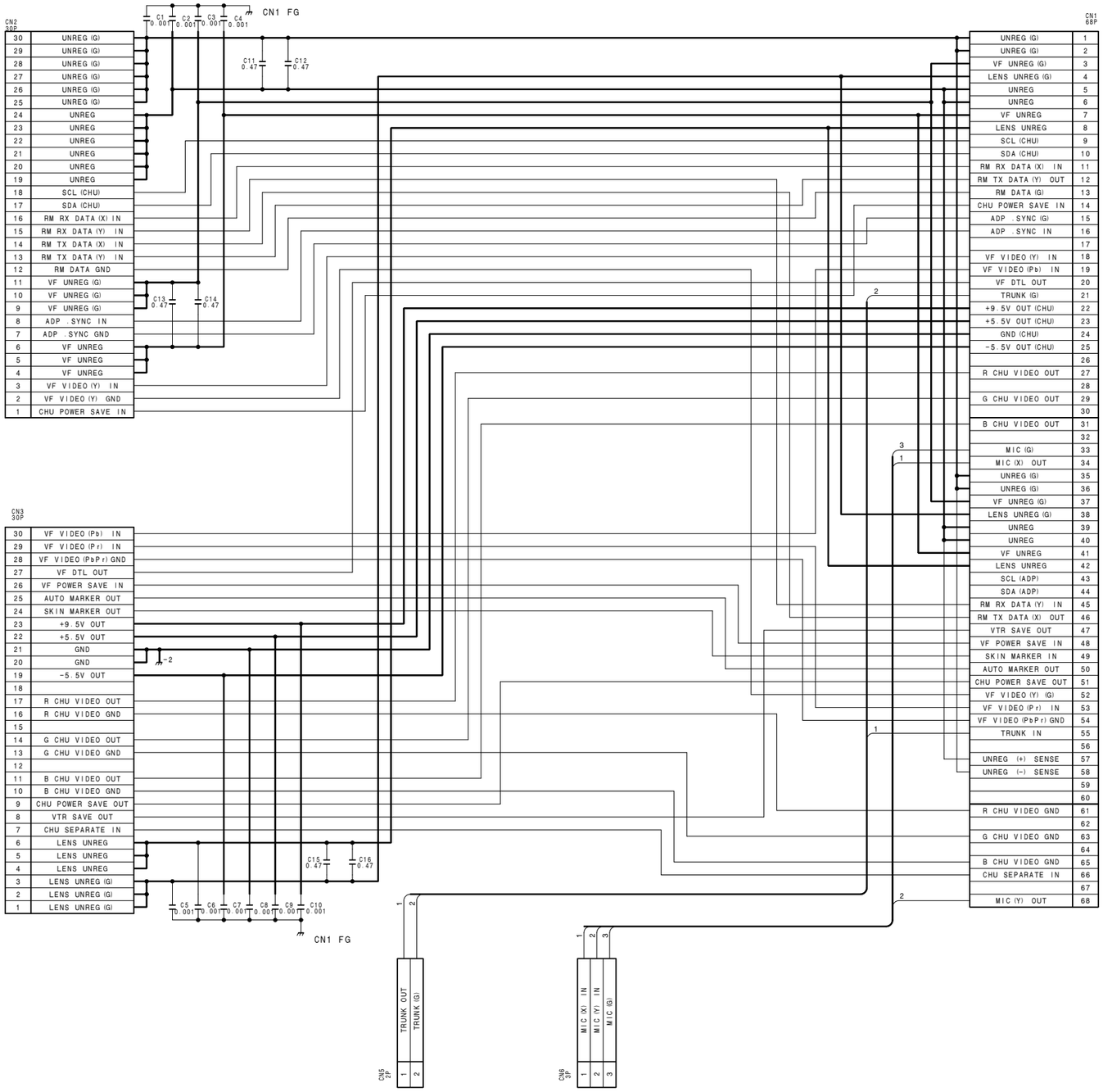

CN-1034

BOARD NO. 1-660-232-11
LOT NO. 511-
B-¥HDC750-CN1034-11

HDC-750

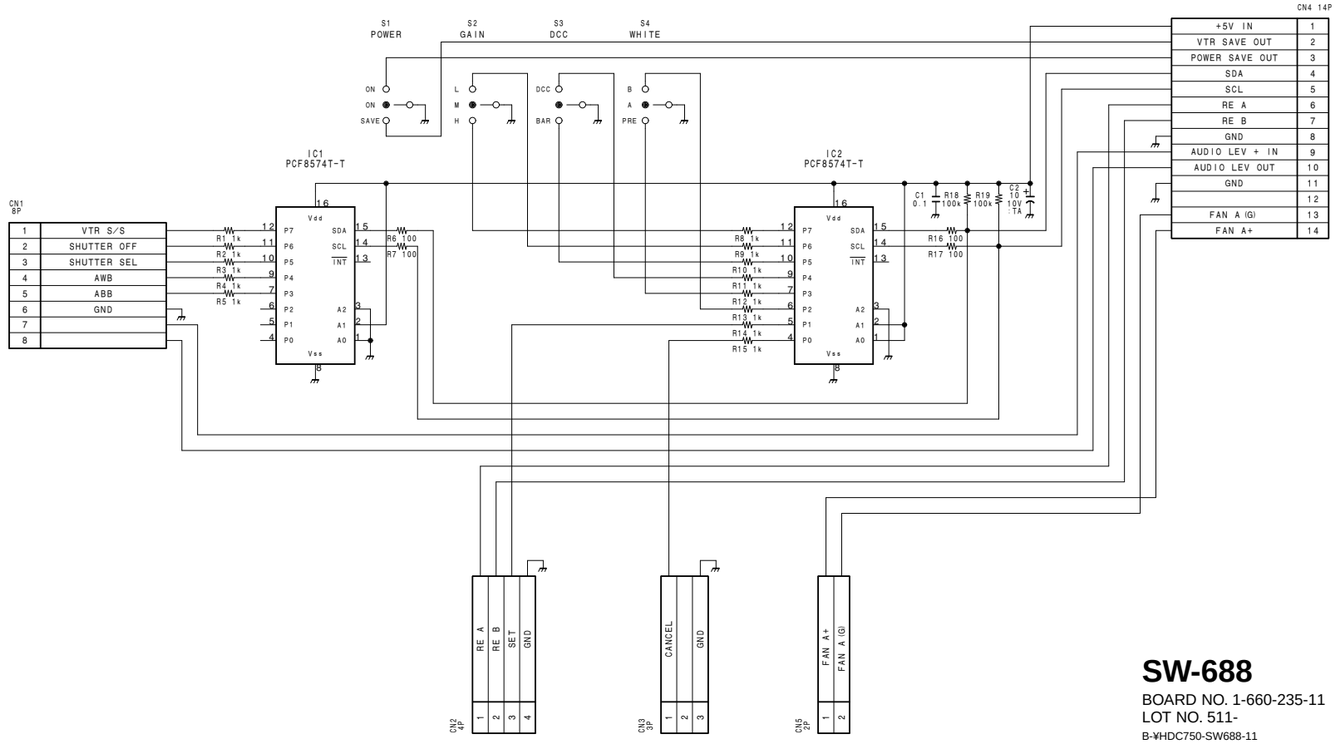

SW-688

BOARD NO. 1-660-235-11
LOT NO. 511-
B-¥HDC750-SW688-11

HDC-750

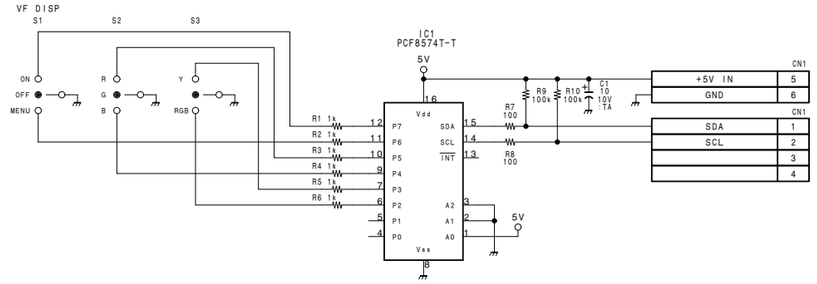

SW-806

BOARD NO. 1-660-233-11
LOT NO. 511-

B-¥HDC750-SW806-11

HDC-750

TO SW-806

TO VF

TO DR-264

TO PA-173

TO PS-398

TO IF-3

TO VA-158

TO MX-59

TO PR-200

TO DL-65

TO IE-44

TO SW-688

TO LENS

NOTE

REF. NO.	CHANGE INFORMATION	SERIAL NO.
IC2	TLC27M2CPW-E05 → LM358PW-E05	10116-

MB-570

BOARD NO. 1-660-231-11
LOT NO. 511-
B-¥HDC750-MB570-11

HDC-750

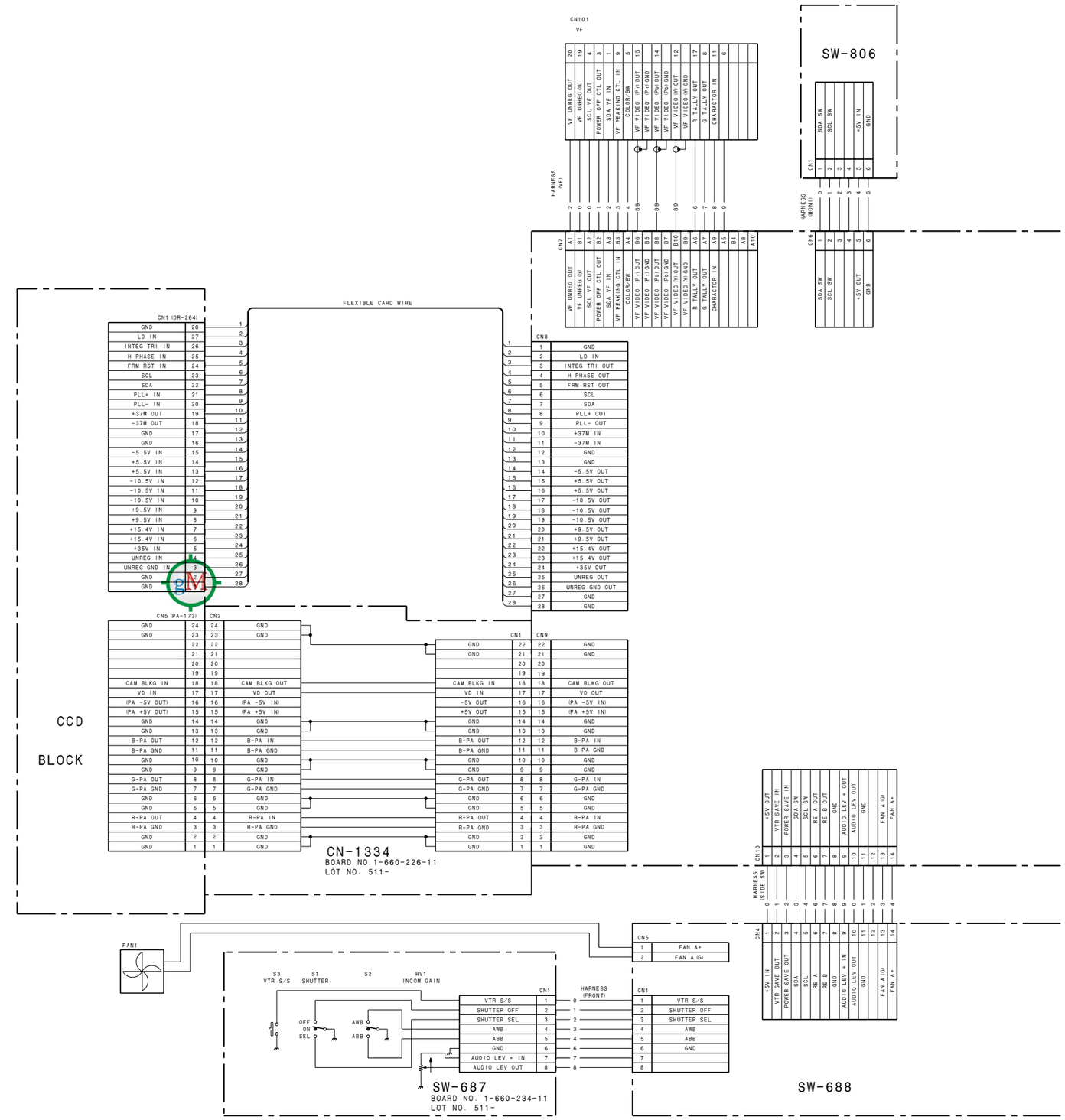
CN101
VF
VF UNREG OUT
VF UNREG (G)
SCL VF OUT
POWER SAVE CTL OUT
SDA VF IN
VF PEAKING CTL IN
COLOR/BW
VF VIDEO (P1) OUT
VF VIDEO (P1) GND
VF VIDEO (P3) OUT
VF VIDEO (P3) GND
VF VIDEO (Y) OUT
VF VIDEO (Y) GND
R TALLY OUT
G TALLY OUT
CHARACTOR IN
SW-806
SDA SW
SCL SW
+5V IN
GND
HARNESS (VF)
CN7
CN6
+5V OUT
VTR SAVE IN
POWER SAVE IN
SDA SW
SCL SW
RE A OUT
RE B OUT
GND
AUDIO LEV + OUT
AUDIO LEV OUT
FAN A(G)
FAN A+
FLEXIBLE CARD WIRE
CN1 (DR-264)
GND
LD IN
INTEG TRI IN
H PHASE IN
FRM RST IN
SCL
SDA
PLL+ IN
PLL- IN
+37M OUT
-37M OUT
-5.5V IN
+5.5V IN
-10.5V IN
+9.5V IN
+15.4V IN
+35V IN
UNREG IN
UNREG GND IN
CN8
INTEG TRI OUT
H PHASE OUT
FRM RST OUT
PLL+ OUT
PLL- OUT
+37M IN
-37M IN
-5.5V OUT
+5.5V OUT
-10.5V OUT
+9.5V OUT
+15.4V OUT
+35V OUT
UNREG OUT
UNREG GND OUT
CN5 (PA-173)
CN2
CAM BLKG IN
VD IN
(PA -5V OUT)
(PA +5V OUT)
B-PA OUT
B-PA GND
G-PA OUT
G-PA GND
R-PA OUT
R-PA GND
CAM BLKG OUT
VD OUT
(PA -5V IN)
(PA +5V IN)
B-PA IN
G-PA IN
R-PA IN
CCD
BLOCK
CN-1334
BOARD NO.1-660-226-11
LOT NO. 511-
CN9
CN10
HARNESS (SIDE SW)
CN4
FAN1
CN5
S3
VTR S/S
S1
SHUTTER
S2
RV1
INCOM GAIN
OFF
ON
SEL
AWB
ABB
VTR S/S
SHUTTER OFF
SHUTTER SEL
AWB
ABB
GND
AUDIO LEV + IN
AUDIO LEV OUT
HARNESS (FRONT)
SW-687
BOARD NO. 1-660-234-11
LOT NO. 511-
SW-688

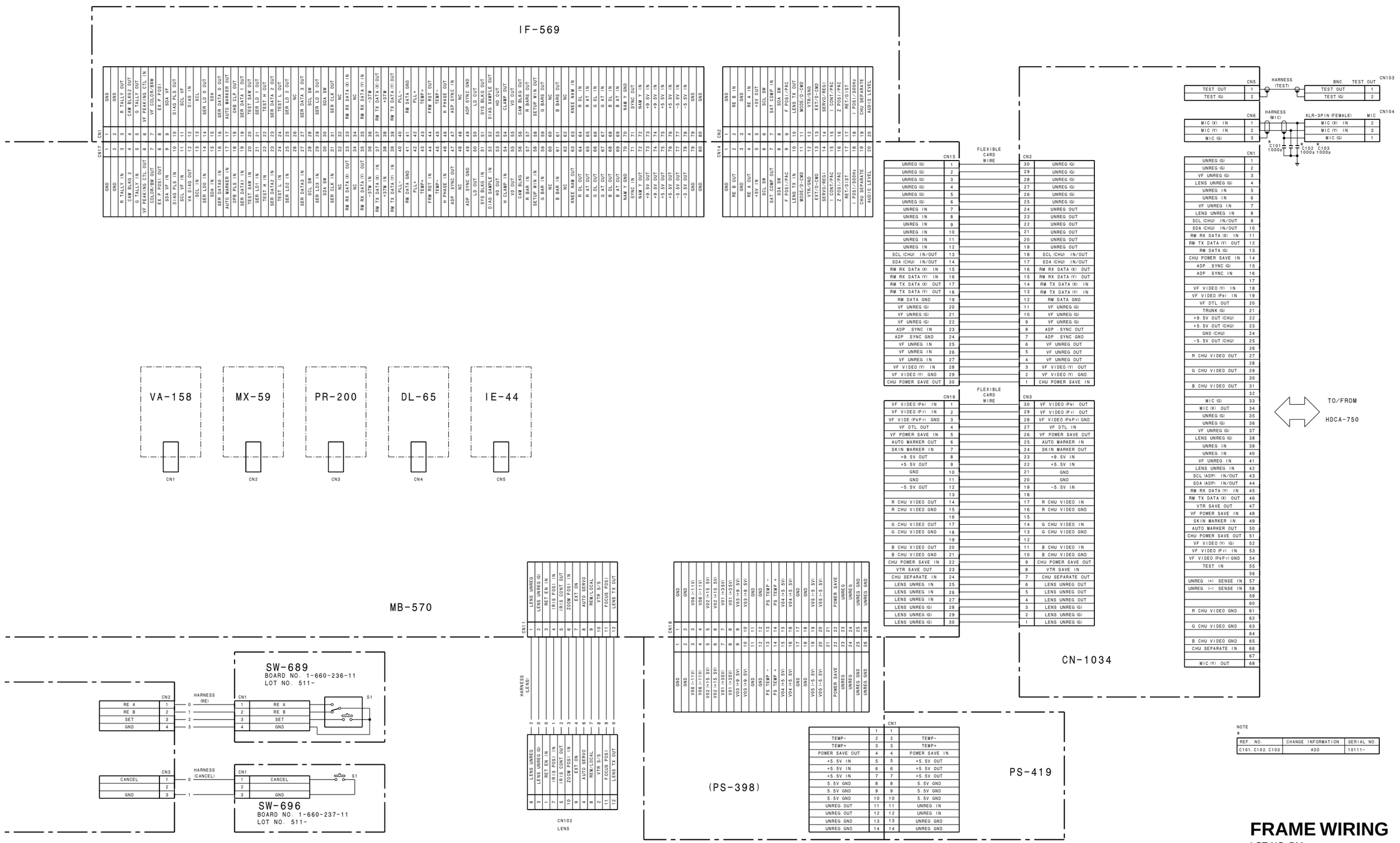

FRAME WIRING

LOT NO. 511-

B-¥HDC750-FRAME

HDCA-750

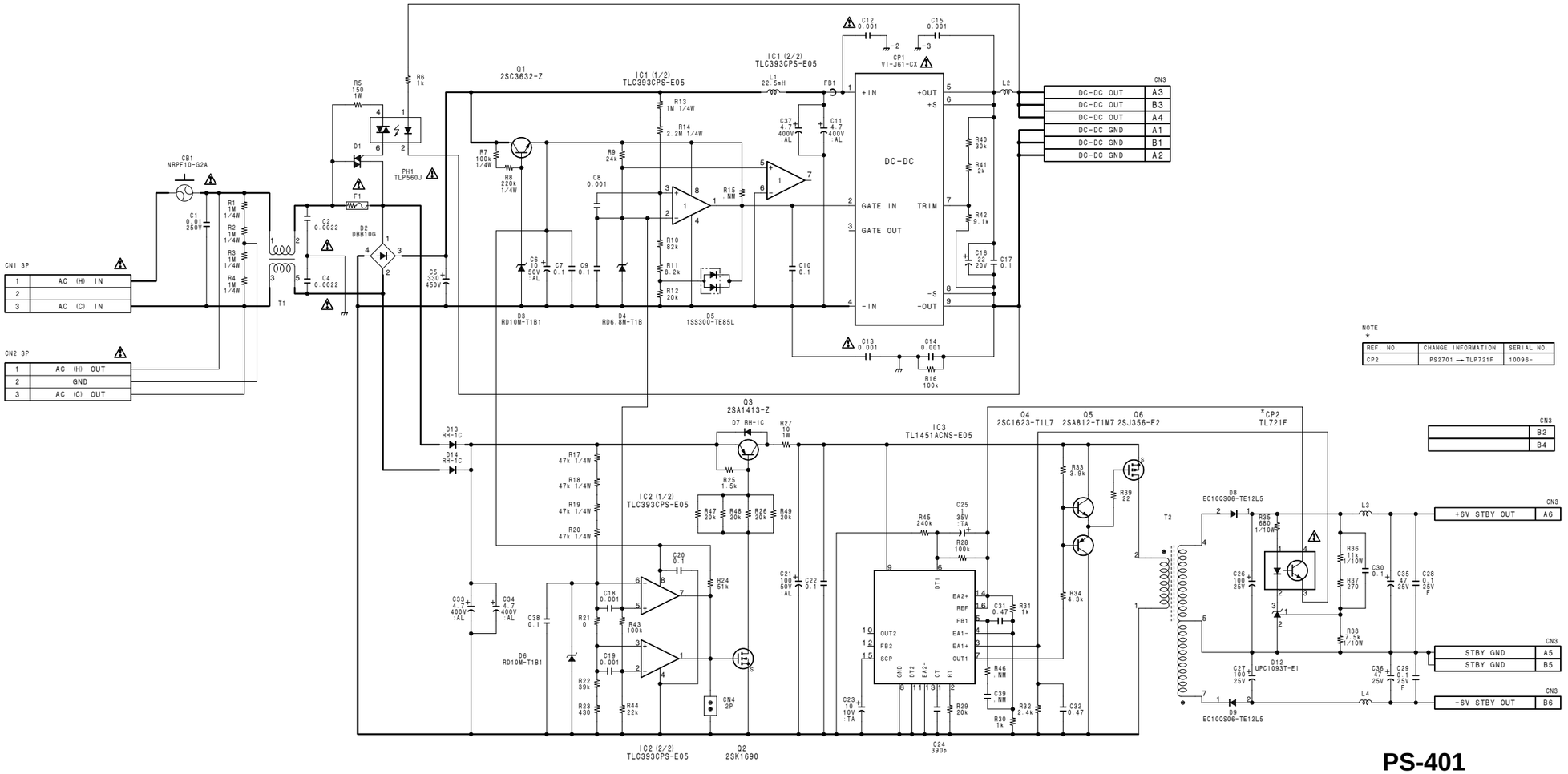

NOTE
*

REF. NO.	CHANGE INFORMATION	SERIAL NO.
CP2	PS2701 → TLP721F	10096-

PS-401

BOARD NO. 1-660-254-11/12/13
LOT NO. 511-
B-¥HDCA750-PS401-12

HDCA-750

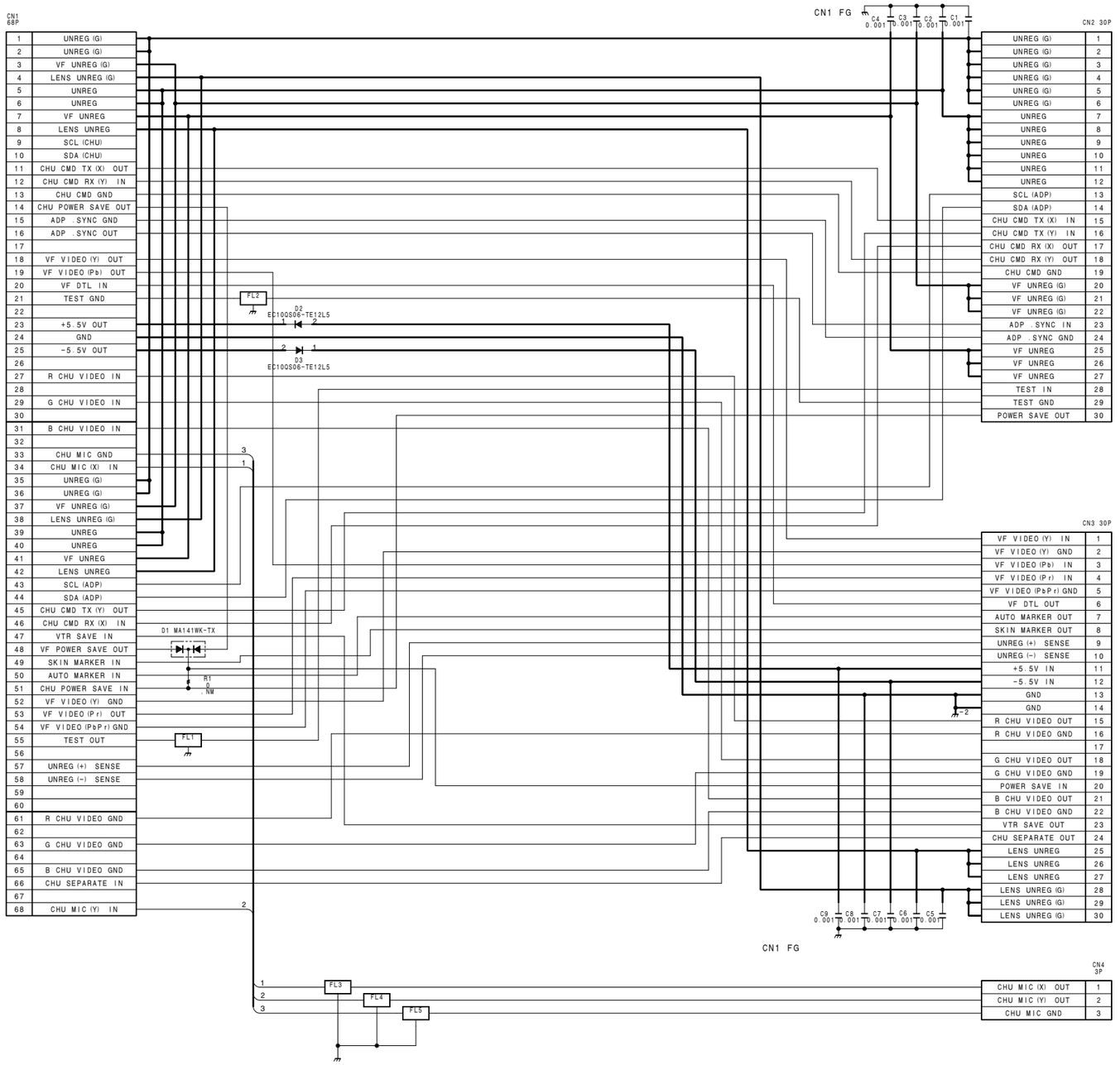

CN-1039

BOARD NO. 1-660-249-11/12
LOT NO. 511-
B-¥HDCA750-CN1039-12

HDCA-750

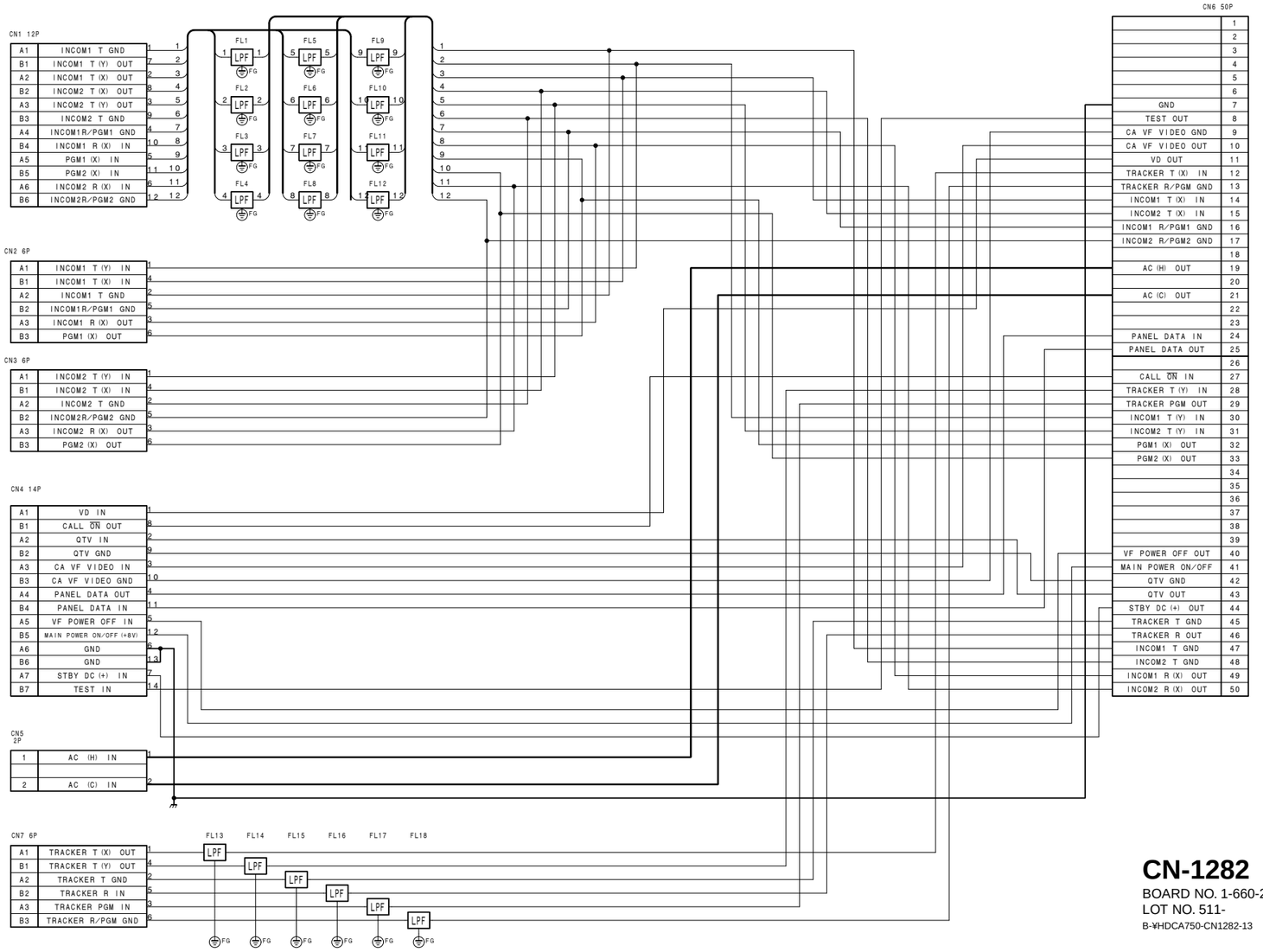

CN-1282
BOARD NO. 1-660-251-11/12
LOT NO. 511-
B-¥HDCA750-CN1282-13

http://getMANUAL.com

HDCA-750

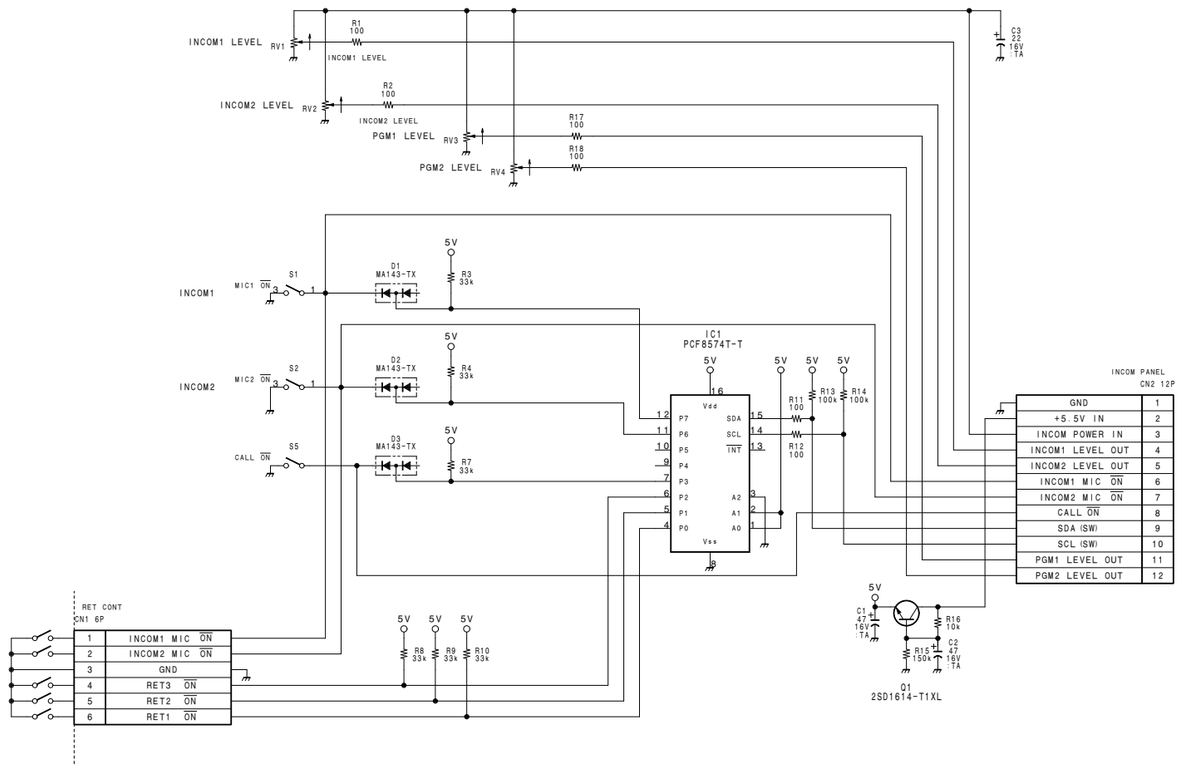

SW-690

BOARD NO. 1-660-259-11
LOT NO. 511-

B-¥HDCA750-SW690-11

HDCA-750

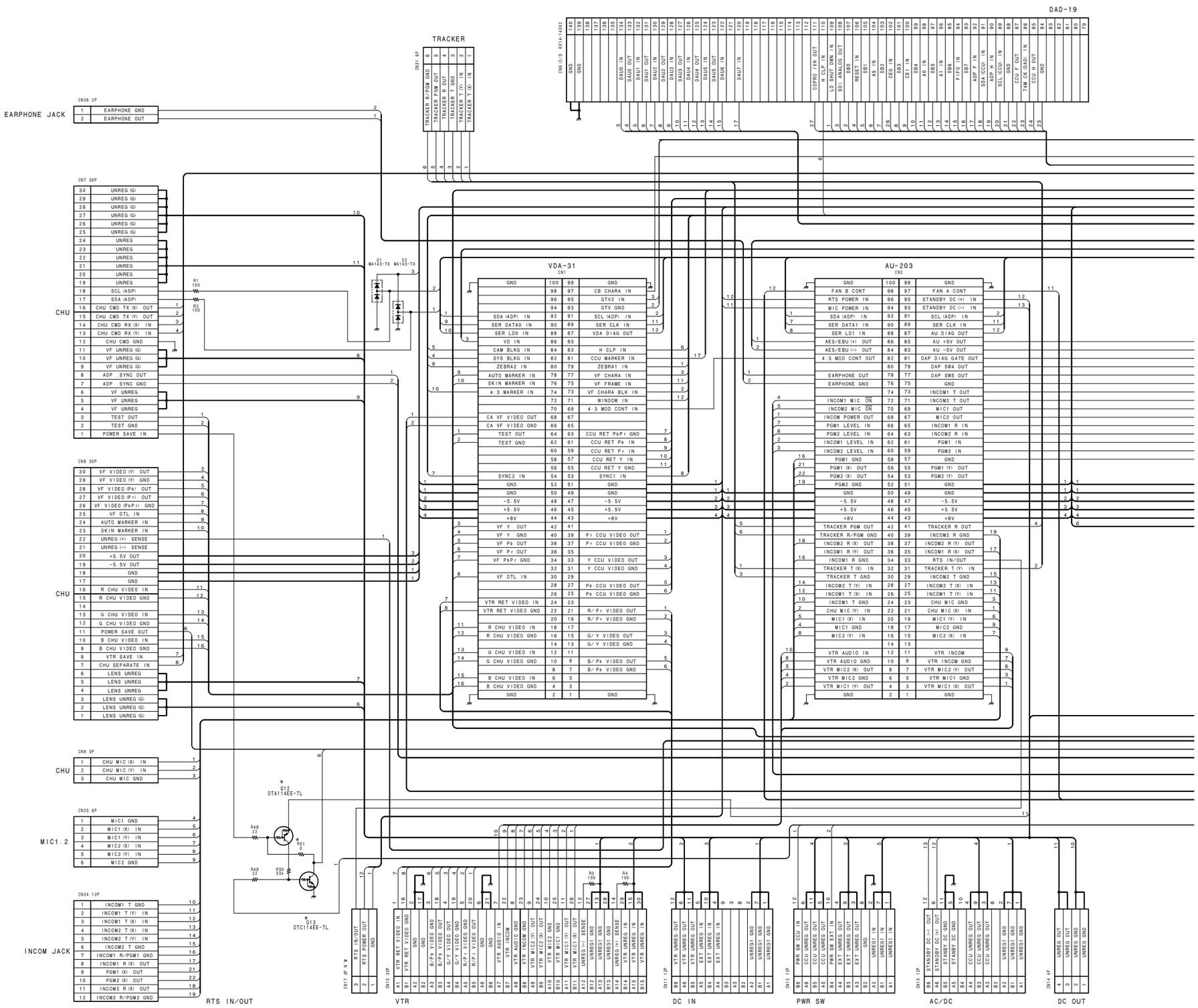

5-62

5-62

HDC-700/750
HDCA-750

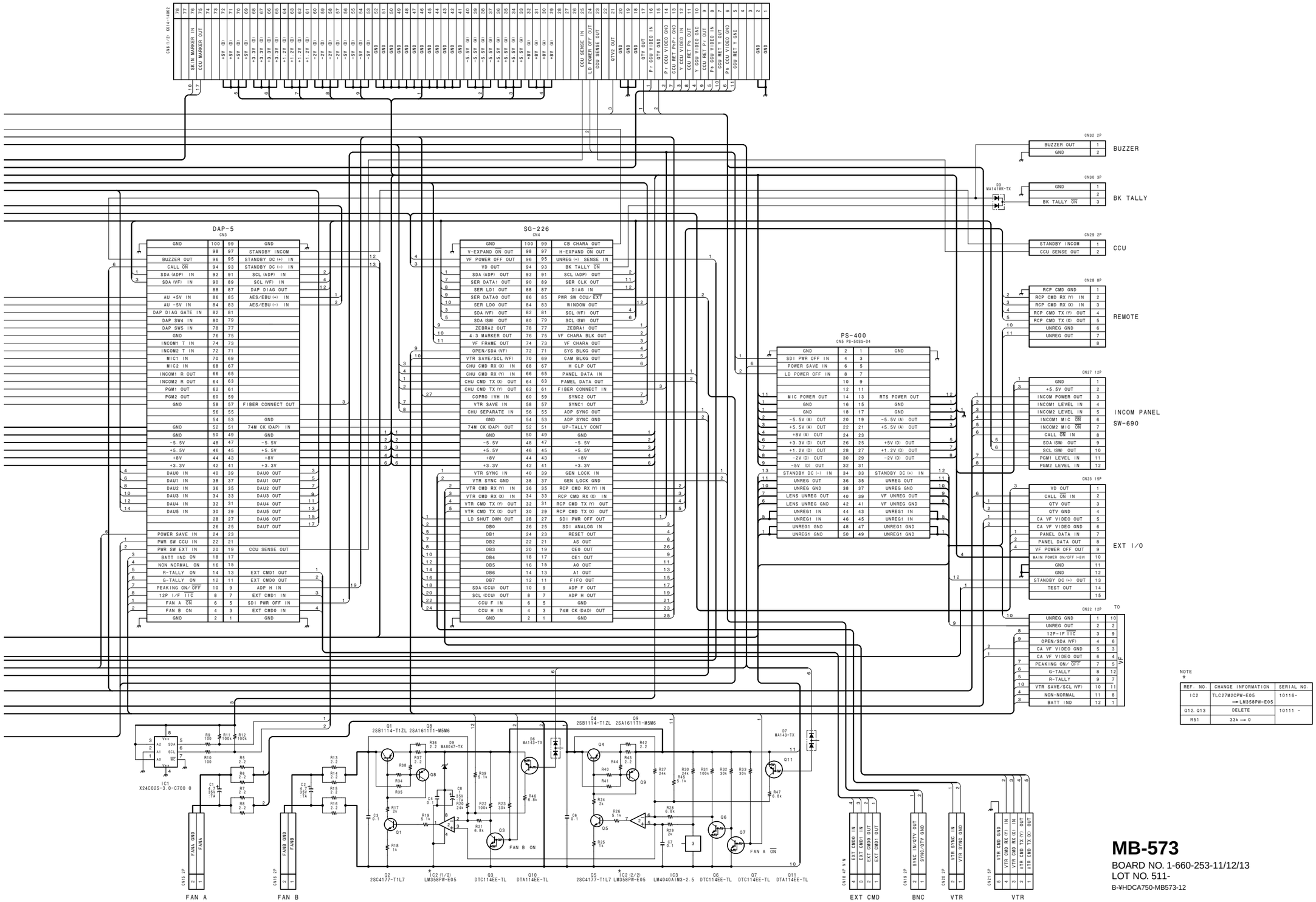

NOTE
★

REF. NO.	CHANGE INFORMATION	SERIAL NO.
IC2	TLC27M2CPW-E05 ⟶ LM358PW-E05	10116-
Q12. Q13	DELETE	10111 -
R51	33k ⟶ 0	

MB-573

BOARD NO. 1-660-253-11/12/13
LOT NO. 511-
B-VHDCA750-MB573-12

HDCA-750

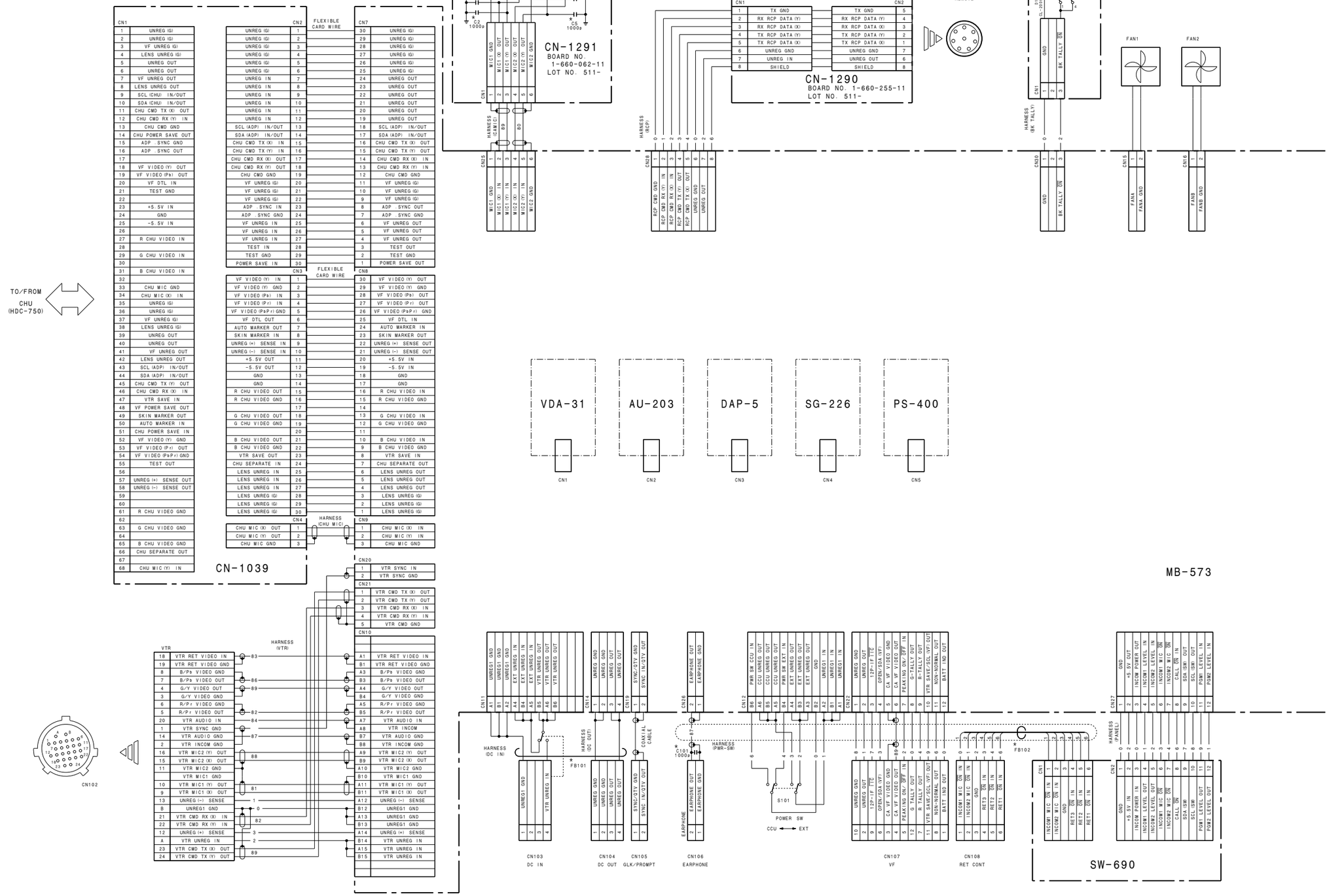
CN1 UNREG (G) 1 … 68 CHU MIC (Y) IN
CN2 UNREG (G) 1 … 30 POWER SAVE IN
CN3 VF VIDEO (Y) IN 1 … 30 VF VIDEO (Y) OUT
CN4 CHU MIC (X) OUT 1 / CHU MIC (Y) OUT 2 / CHU MIC GND 3
CN7 30 UNREG (G) … 1 POWER SAVE OUT
CN8 30 VF VIDEO (Y) OUT … 1 LENS UNREG (G)
CN9 1 CHU MIC (X) IN / 2 CHU MIC (Y) IN / 3 CHU MIC GND
CN20 1 VTR SYNC IN / 2 VTR SYNC GND
CN21 1 VTR CMD TX (X) OUT / 2 VTR CMD TX (Y) OUT / 3 VTR CMD RX (X) IN / 4 VTR CMD RX (Y) IN / 5 VTR CMD GND
CN10 A1 VTR RET VIDEO IN … B15 VTR UNREG IN
FLEXIBLE CARD WIRE
HARNESS (CHU MIC)
CN-1039
TO/FROM CHU (HDC-750)
CN102
VTR 18 VTR RET VIDEO IN … 24 VTR CMD TX (Y) OUT
HARNESS (VTR)
CN2 MIC1
CN3 MIC2
C1 1000p / C2 1000p / C3 1000p / C4 1000p / C5 1000p / C6 1000p
CN-1291
BOARD NO. 1-660-062-11
LOT NO. 511-
HARNESS (CN1MIC) 80
CN25 MIC1 GND / MIC1 (X) IN / MIC1 (Y) IN / MIC2 (X) IN / MIC2 (Y) IN / MIC2 GND
HARNESS (RCP)
CN28 RCP CMD GND / RCP CMD RX (Y) IN / RCP CMD RX (X) IN / RCP CMD TX (Y) OUT / RCP CMD TX (X) OUT / UNREG GND / UNREG OUT
CN1 1 TX GND … 8 SHIELD
CN2 5 TX GND … 8 SHIELD
CN-1290
BOARD NO. 1-660-255-11
LOT NO. 511-
REMOTE
LP-95
BOARD NO. 1-660-258-11
LOT NO. 511-
D1, D2 LTL-2R3HBR-E1
S1
HARNESS (BK TALLY)
CN30 GND / BK TALLY ON
FAN1
FAN2
CN15 FANA / FANA GND
CN16 FANB / FANB GND
VDA-31 CN1
AU-203 CN2
DAP-5 CN3
SG-226 CN4
PS-400 CN5
MB-573
CN11 UNREG GND / UNREG GND / UNREG GND / EXT UNREG IN / EXT UNREG IN / EXT UNREG IN / EXT UNREG OUT / VTR UNREG OUT / VTR UNREG OUT
CN14 UNREG GND / UNREG GND / UNREG OUT / UNREG OUT
CN15 SYNC-DTV GND / SYNC IN-DTV OUT
CN26 EARPHONE OUT / EARPHONE GND
CN12 PWR SW CCU IN / CCU UNREG OUT / CCU UNREG OUT / CCU UNREG OUT / PWR SW EXT IN / EXT UNREG OUT / EXT UNREG OUT / GND / UNREG1 IN / UNREG1 IN
CN32 UNREG1 GND
HARNESS (DC IN)
HARNESS (DC OUT)
COAXIAL CABLE
HARNESS (PWR-SW)
FB101
C101 1000p
S101
POWER SW CCU ⟷ EXT
FB102
CN103 DC IN: UNREG GND / UNREG GND / UNREG GND / VTR UNREG IN
CN104 DC OUT: UNREG GND / UNREG GND / UNREG OUT / UNREG OUT
CN105 GLK/PROMPT: SYNC-DTV GND / SYNC IN-DTV OUT
CN106 EARPHONE: EARPHONE OUT / EARPHONE GND
CN107 VF: UNREG GND / UNREG OUT / 12P-IF FPC / OPEN/SDA (VF) / CA VF V.DEO GND / CA VF V.DEO OUT / PEAKING ON/OFF IN / G TALLY OUT / R TALLY OUT / VTR BATT/SCL OUT / NON-NORMAL OUT / BATT IND OUT
CN108 RET CONT: INCOM1 MIC ON IN / INCOM2 MIC ON IN / GND / RET3 ON IN / RET2 ON IN / RET1 ON IN
HARNESS (PANEL)
CN27 GND / +5.5V OUT / INCOM POWER OUT / INCOM1 LEVEL IN / INCOM2 LEVEL IN / INCOM1 MIC ON / INCOM2 MIC ON / SCL SW / SDA SW / SCL (SW) OUT / PGM1 LEVEL IN / PGM2 LEVEL IN
SW-690
CN1 GND / +5.5V IN / INCOM POWER IN / INCOM1 LEVEL OUT / INCOM2 LEVEL OUT / INCOM1 MIC ON / INCOM2 MIC ON / SCL SW / SDA SW / SCL (SW) / PGM1 LEVEL OUT / PGM2 LEVEL OUT

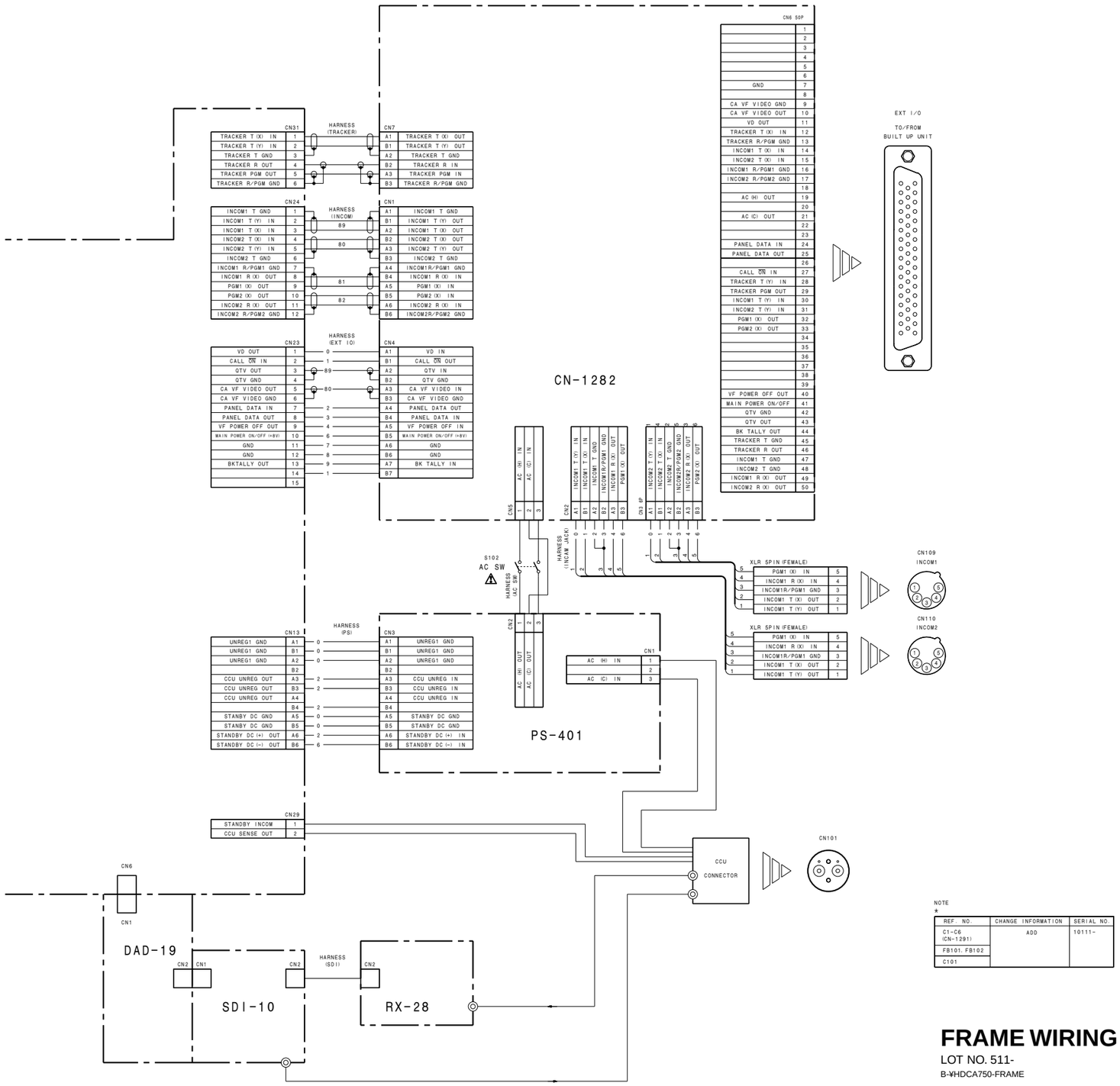

NOTE
*

REF. NO.	CHANGE INFORMATION	SERIAL NO.
C1-C6 (CN-1291)	ADD	10111-
FB101, FB102		
C101		

FRAME WIRING

LOT NO. 511-

B-¥HDCA750-FRAME

このマニュアルに記載されている事柄の著作権は当社にあり，説明内容は機器購入者の使用を目的としています。
従って，当社の許可なしに無断で複写したり，説明内容(操作，保守等)と異なる目的で本マニュアルを使用することを禁止します。

The material contained in this manual consists of information that is the property of Sony Corporation and is intended solely for use by the purchasers of the equipment described in this manual.
Sony Corporation expressly prohibits the duplication of any portion of this manual or the use thereof for any purpose other than the operation or maintenance of the equipment described in this manual without the express written permission of Sony Corporation.

Le matériel contenu dans ce manuel consiste en informations qui sont la propriété de Sony Corporation et sont destinées exclusivement à l’usage des acquéreurs de l’équipement décrit dans ce manuel.
Sony Corporation interdit formellement la copie de quelque partie que ce soit de ce manuel ou son emploi pour tout autre but que des opérations ou entretiens de l’équipement à moins d’une permission écrite de Sony Corporation.

Das in dieser Anleitung enthaltene Material besteht aus Informationen, die Eigentum der Sony Corporation sind, und ausschließlich zum Gebrauch durch den Käufer der in dieser Anleitung beschriebenen Ausrüstung bestimmt sind.
Die Sony Corporation untersagt ausdrücklich die Vervielfältigung jeglicher Teile dieser Anleitung oder den Gebrauch derselben für irgendeinen anderen Zweck als die Bedienung oder Wartung der in dieser Anleitung beschriebenen Ausrüstung ohne ausdrückliche schriftliche Erlaubnis der Sony Corporation.

HDC-700/750 (UCJ)
HDCA-750 (UCJ) J, E
3-190-702-05

Sony Corporation
Broadcasting & Professional Systems Company

Printed in Japan
1998. 3 08
©1996